10-1
S/S July 76

FIELD MANUAL

STAFF OFFICERS' FIELD MANUAL ORGANIZATIONAL, TECHNICAL AND LOGISTICAL DATA UNCLASSIFIED DATA

RETURN TO ARMY LIBRARY
ROOM 1 A 518 PENTAGON

HEADQUARTERS, DEPARTMENT OF THE ARMY

JULY 1971

FIELD MANUAL
No. 101–10–1

HEADQUARTERS
DEPARTMENT OF THE ARMY
WASHINGTON, D.C., *26 July 1971*

Staff Officers' Field Manual
ORGANIZATIONAL, TECHNICAL, AND LOGISTICAL DATA
UNCLASSIFIED DATA

		Paragraphs	Pages
CHAPTER 1.	ORGANIZATION		
Section I.	General	1–1—1–5	1–1—1–4
II.	Field army, corps, and field army support command	1–6, 1–7	1–4, 1–5
III.	Divisions	1–8—1–11	1–14—1–220
IV.	Separate brigades	1–12—1–17	1–297—1–316
V.	Engineer amphibious units	1–18, 1–19	1–318
VI.	Airborne special forces group	1–20, 1–21	1–325—1–329
CHAPTER 2.	COMBAT AND COMBAT SUPPORT—OPERATIONS, INTELLIGENCE, AND CIVIL-MILITARY OPERATIONS (STANAG 2151 AND 2154)		
Section I.	Troop planning	2–1—2–8	2–1—2–6
II.	Tactical troop movements	2–9—2–14	2–8—2–29
III.	Intelligence—mapping, airphotography, and geographical factors	2–15—2–29	2–35—2–50
IV.	Weapon characteristics	2–30, 2–31	2–53
V.	Civil-military operations	2–32—2–37	2–66—2–68
CHAPTER 3.	COMBAT SUPPORT—SIGNAL AND ENGINEER		
Section I.	Signal communications	3–1—3–8	3–1—3–8
II.	Engineer support	3–9—3–16	3–8—3–28
CHAPTER 4.	COMBAT SERVICE SUPPORT—PERSONNEL		
Section I.	Introduction	4–1, 4–2	4–1
II.	Personnel and financial administrative support	4–3—4–5	4–2—4–4
III.	Losses and replacements	4–6—4–11	4–4—4–11
IV.	Evacuation and hospitalization	4–12—4–27	4–12—4–19
V.	Prisoners of war	4–28—4–34	4–19—4–22
VI.	Personnel services	4–35—4–38	4–23
CHAPTER 5.	COMBAT SERVICE SUPPORT—SUPPLY (STANAG 2115)		
Section I.	Supply	5–1, 5–2	5–1
II.	Class I and III supply	5–3—5–7	5–2—5–17
III.	Class V supply	5–8—5–18	5–24—5–76
IV.	Class VII supply, major end items—dimensions and weights	5–19, 5–20	5–88
V.	Class II, IV, and VIII supply	5–21—5–24	5–110—5–118
VI.	Consumption rates	5–25—5–27	5–122
VII.	Storage	5–28—5–37	5–135—5–140
VIII.	Distribution	5–38—5–42	5–143—5–147
CHAPTER 6.	COMBAT SERVICE SUPPORT—TRANSPORTATION		
Section I.	Planning	6–1—6–3	6–1
II.	Water	6–4—6–16	6–3—6–23
III.	Rail	6–17—6–36	6–28—6–41
IV.	Motor transport	6–37—6–40	6–42—6–44
V.	Air	6–41—6–45	6–47—6–71
VI.	Miscellaneous transport	6–46—6–49	6–71—6–73

* This manual supersedes FM 101–10–1, 25 September 1969.

		Paragraphs	Pages
CHAPTER 7.	COMBAT SERVICE SUPPORT—MAINTENANCE, CONSTRUCTION, AND OTHER		
Section I.	Maintenance	7-1—7-6	7-1—7-14
II.	Construction	7-7—7-16	7-18—7-39
III.	Other combat service support	7-17—7-22	7-40—7-44
APPENDIX A.	REFERENCES		A-1
B.	SUPPLY DATA BASED ON WORLD WAR II		B-1
C.	MISCELLANEOUS DATA		C-1
INDEX			Index-1

CHAPTER 1

ORGANIZATION

Section I. GENERAL

1–1. Purpose and Scope

a. Purpose. This manual is for use as a planning guide only. It provides general planning data for staff officers of all echelons. Detailed reference data are found in tables of organization and equipment (TOE), field manuals, technical manuals, technical bulletins, and supply bulletins as outlined in the DA Pam 310-series. The principles and procedures of combat service support are in FM 100–10; the duties of the staff officers and the principles and procedures of staff action are in FM 101–5.

b. Scope. Source data cutoff date for material contained in this manual is 15 November 1970. Tables, organization charts, and examples in chapters 1 through 7 are not, in all cases, based on latest TOE; therefore, computations must be adjusted accordingly. The TOE series used in making the calculations is indicated to permit the user to make adjustments, when needed, through comparison of TOE.

Caution: **Technical and logistic data in this manual are based on experience principally from World War II and the Korean War and can be applied to the future only with judgment and discrimination. Unless specified, these data have been adjusted to reflect current equipment capabilities, rates of fire, and so forth. Planning factors should be modified, as appropriate, to reflect specific requirements of mission, environment, enemy capabilities, and nuclear conditions. Whenever experience factors are available, they should be used rather than those from this manual. This manual is applicable to nuclear and nonnuclear warfare.**

FM 101–10, *Staff Officers' Field Manual—Organizational, Technical, and Logistical Data,* consists of three parts published separately:

FM 101–10–1—*Unclassified Data.*

FM 101–10–2—*Extracts of Nondivisional Tables of Organization and Equipment.*

FM 101–10–3—*Classified Data (U).*

1–2. Recommended Changes

Users of this manual should submit recommended changes and comments to improve the manual. Comments should be keyed to the specific page, paragraph, and line of the text in which change is recommended. Reasons will be provided for each comment to insure understanding and complete evaluation. Comments should be prepared using DA Form 2028 (Recommended Changes to Publications) and forwarded direct to the Commanding General, US Army Combat Developments Command Institute of Combined Arms and Support, Fort Leavenworth, Kansas 66027. Originators of proposed changes that would constitute a significant modification of approved doctrine may send an information copy, through command channels, to the Commanding General, US Army Combat Developments Command, Fort Belvoir, Virginia 22060, to facilitate review and followup.

1–3. Organization of the Department of the Army

Figure 1–1 depicts the organization of the Department of the Army (DA), comprised of the Army Staff, the oversea commands, the US Continental Army Command (CONARC), functional comands, and the Army portion of the quick-reaction force (US Army Forces, Strike Command).

a. The functional commands are represented by—

(1) The US Army Materiel Command, which is responsible for testing, evaluating, and procuring Army materiel.

(2) The US Army Combat Developments Command (USACDC), which is responsible for Army doctrine and materiel requirements.

(3) The US Army Strategic Communications Command, which is responsible for worldwide Army communications.

(4) The US Army Security Agency, which is

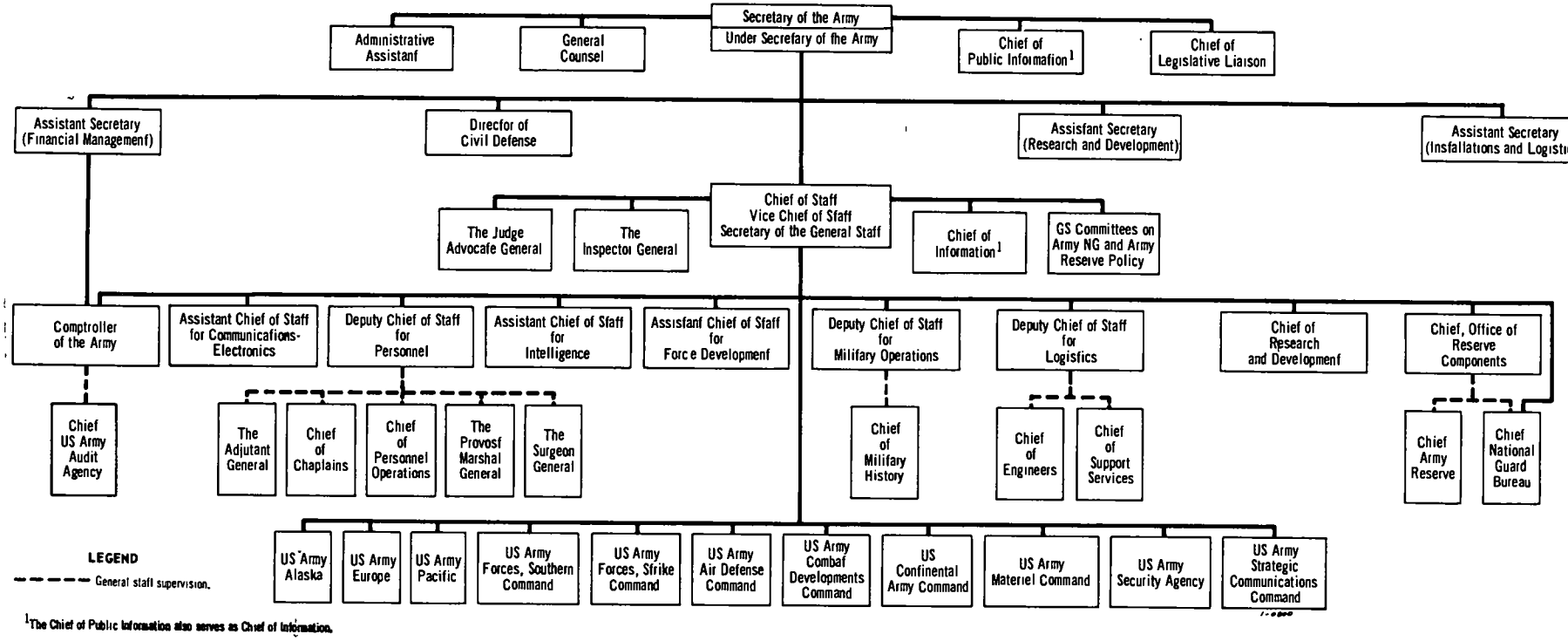

[1]The Chief of Public Information also serves as Chief of Information.

Figure 1–1. Organization of the Department of the Army.

responsible for the security of Army communications.

(5) The US Army Air Defense Command, which is responsible for the Army portion of North American air defense.

b. CONARC is responsible for command of the five US Army areas, for class I installations, and for the Army service schools and courses listed in AR 10–7.

1–4. Theater Army

a. General. In normal operations, the theater of operations is organized as a unified or a combined command. US theater army headquarters is the senior US Army headquarters in the theater. In a theater where only US forces comprise the theater command, US theater army headquarters has supervision of strategic, tactical, and combat service support operations of all US Army elements. Theater army is organized to perform these operations in peace and in war. However, in time of war the US theater army headquarters becomes, for all practical purposes, an administrative headquarters for the support of US Army forces.

b. Composition. Figure 1–2 outlines the basic elements of a theater army command. The commanders of both the field army and the theater army are assigned all the means needed to perform their missions in the combat and the communications zones, subject to policy guidance and direction of the theater commander. Additional

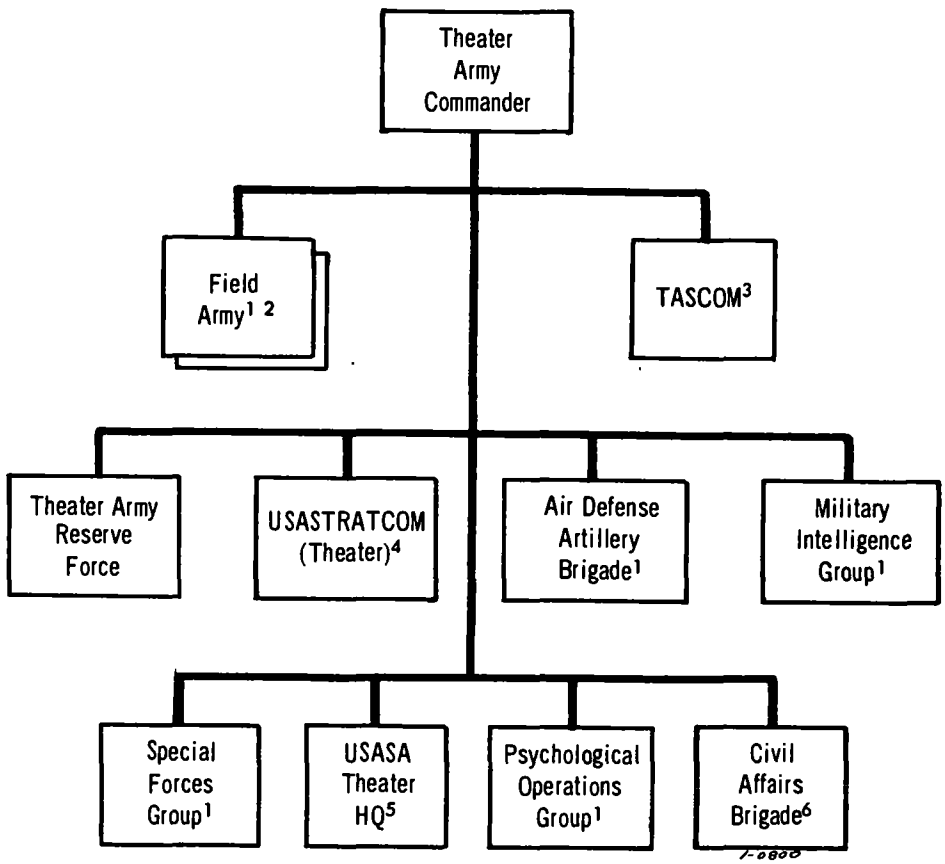

[1]Under the operational command of the unified commander in wartime (except military intelligence group technical intelligence units).

[2]Army groups may be necessary when several field armies are employed.

[3]Functions of HQ, TASCOM, may be assumed by HQ, theater army, in wartime.

[4]Under operational control of the theater army commander.

[5]Provides support in accordance with AR 10-122.

[6]May be assigned or attached to a theater army, TASCOM, or ASCOM and may be under the operational command of the unified command commander in wartime.

Figure 1–2. Theater army structure.

details on theater army subordinate commands are in FM 54–3, FM 54–4, FM 54–7, and FM 100–15.

(1) *Headquarters.* Theater army headquarters has no prescribed organization. It consists of elements necessary to provide command and control of assigned forces. The allotment and grouping of these forces are based on the mission assigned.

(2) *Assigned forces.* Forces assigned to US theater army may consist of—

(*a*) Combat forces—those forces whose primary missions are to participate in combat.

(*b*) Combat support troops—those units or organizations whose primary mission is to furnish operational assistance for the combat elements.

(*c*) Combat service support elements—those elements whose primary missions are to provide service support to combat forces and which are part, or prepared to become part, of a theater, command, or task force formed for combat operations.

1–5. Army Group

a. General. The army group directs the strategic and tactical operations of two or more field armies or similar tactical groupings. When only US forces comprise the theater command, army groups, if employed, operate under the direct control of the US theater army commander. When army groups operate as part of a multinational theater, they may receive strategic direction from a superior land force headquarters.

b. Composition.

(1) *Headquarters.* Army group headquarters has no prescribed organization. It consists of elements necessary to exercise strategic and tactical control of its assigned forces. Army group does not normally operate combat service support installations.

(2) *Assigned forces.* Forces assigned to an army group may consist of—

(*a*) Field armies.

(*b*) Independent corps.

(*c*) Divisions.

Section II. FIELD ARMY, CORPS, AND FIELD ARMY SUPPORT COMMAND

1–6. Field Army

a. General. The field army is a tactical and an administrative organization capable of independent operations. Normally, it consists of a headquarters; certain assigned field army troops; a field army support command (FASCOM) headquarters; and a variable number of corps, divisions, and reinforcing combat, combat support, and combat service support troops. Figure 1–3 illustrates the major organizations of a type of field army.

b. FASCOM. The mission of the FASCOM is to provide, within assigned responsibilities, combat service support to a field army (or other supported forces). The FASCOM is also responsible for rear area protection for the field army service area. Functions performed by the FASCOM include—

(1) Administration.

(2) Construction, when required, through attached units.

(3) Maintenance.

(4) Movements.

(5) Supply.

(6) Services—finance, legal, medical, and personnel.

(7) Transportation.

(8) Field services—laundry, bath, clothing exchange, bakery, renovation, salvage, decontamination, graves registration, clothing and post exchange sales, and provision of general duty labor. Figure 1–4 illustrates FASCOM support for a three-corps, 12-division field army; figure 1–5 shows the support brigades within a type of FASCOM.

c. Types of Field Army Units. Army field forces are structured for specific tactical situations and geographical areas. Tables 1–1 through 1–4 below are intended to depict a type of combat force, with the combat, combat support, and combat service support units necessary to conduct operations. These tables list examples of units available for structuring a force to meet a specific situation. *FASCOM and other field army units that normally operate in the corps area are indicated in parentheses in column 4, but are part of the totals shown in column 7 of the tables.* Major subordinate units of divisions listed in these tables may be identified from organization charts shown in section III. The types of army divisions are shown in figures 1–6, 1–33, and 1–53. (See para 2–2).

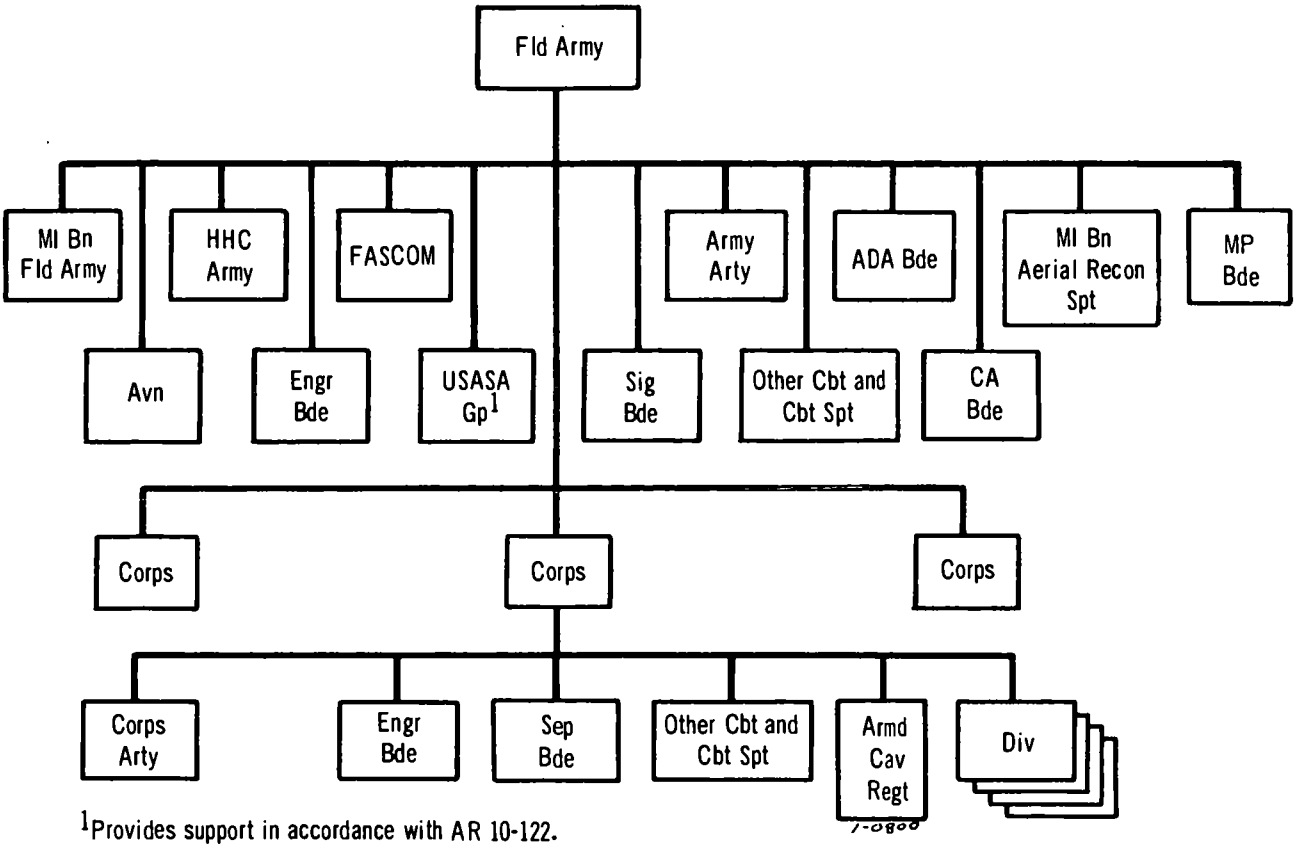

Figure 1–3. Major field army units.

1–7. Corps

a. General. When operating as part of a field army, the corps is primarily a tactical organization of execution; however, when operating independently, the corps exercises both tactical and administrative functions. The corps consists of a headquarters; certain assigned corps troops; and a variable number of divisions and reinforcing combat, combat support, and, in the case of an independent corps, combat service support troops.

b. Corps Headquarters. TOE 52–1 shows the composition of a corps headquarters.

c. Types of Corps Units. Figure 1–3 and tables 1–1 through 1–4 show the units that may be included in a type of corps comprised of one armored, one infantry, and two infantry (mechanized) divisions.

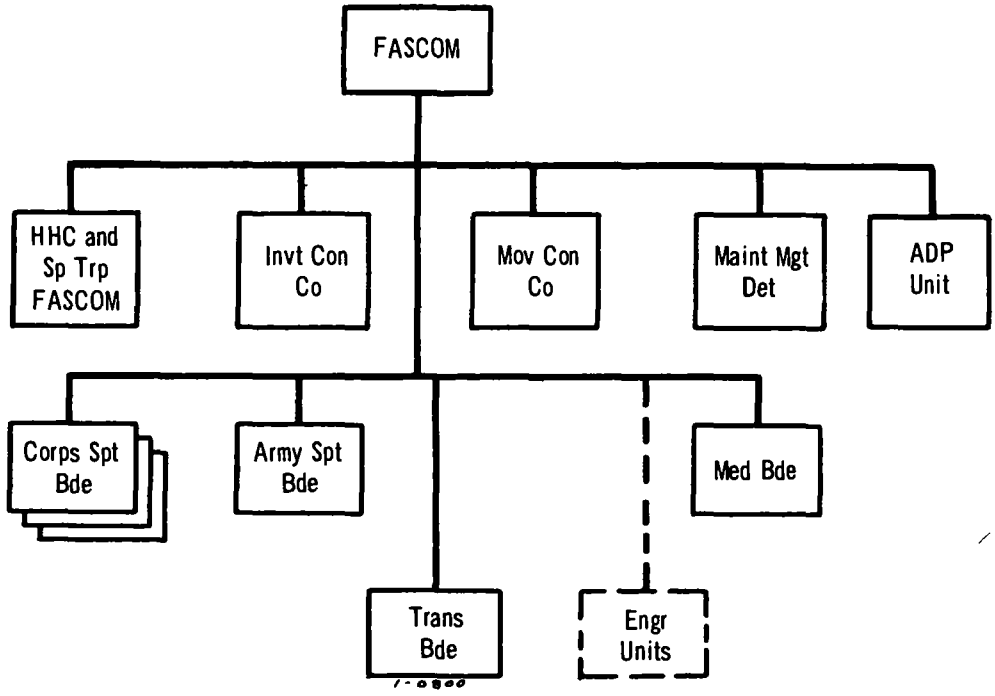

LEGEND

Attached when required.

Figure 1–4. Support for a three-corps, 12-division field army.

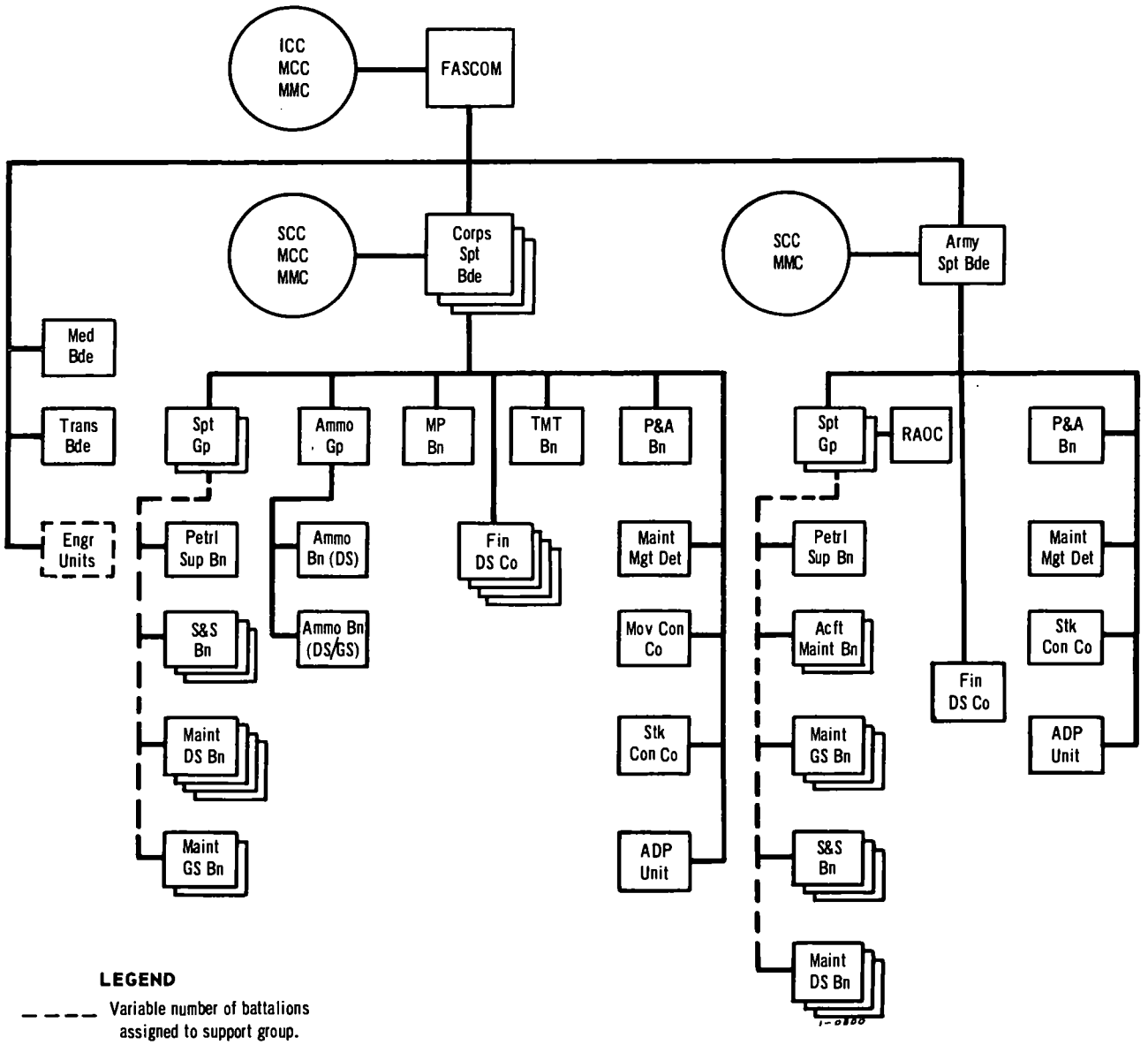

Figure 1–5. The support brigades for a three-corps, 12-division field army.

Table 1-1. Major Field Army Units—Command and Control

1	1 Unit	2 TOE	3 TOE str	4 Corps	5 FASCOM	6 Fld army	7 Total fld army
2	HHC, army	51-1G	697			1	1
3	HHC, corps	52-1G	256	1			3
4	HQ and sp trp, FASCOM	54-12G	427		1		1
5	HHC, army spt bde	54-22G	255		1		1
6	HHC, corps spt bde	54-22G	272	(1)	3		3
7	HHC, spt gp, army	29-102G	175		2		2
8	HHC, spt gp, corps	29-102G	142	(2)	6		6
9	Spt cen, rr area op	29-408G	82		2		2
10	DPU (FASCOM) (type C)	29-550T	51		1		1
11	DPU (spt bde) (type B)	29-550T	156	(1)	4		4

Table 1-2. Major Field Army Units—Combat Units

1	1 Unit	2 TOE	3 TOE str	4 Corps	5 FASCOM	6 Fld army	7 Total fld army
	Divisions						
2	Inf div (type)	7H	[ab]16,633	1			3
3	Armd div (type)	17H	[ac]16,771	1			3
4	Inf div (mech) (type)	37H	[ad]16,489	2			6
5	Abn div (type)	57G	[a]13,737				
6	Ambl div (type)	67T	[f]16,483				
	Sep bde base						
7	Sep inf bde	7-100G	2,124				
8	Sep armd bde	17-100G	2,096				
9	Sep inf bde (mech)	37-100G	2,096	1			3
10	Sep abn bde	57-100G	1,663				
11	Sep lt inf bde	77-100G	1,603				
	Inf units						
12	Inf bn, sep inf bde	7-15G	841				
13	Inf bn, sep abn bde	7-35G	809				
14	Inf bn (mech), sep armd or inf (mech) bde	7-45G	920	2			6
15	Inf bn, sep lt inf bde	7-175G	812				
16	Abn inf ranger co	7-157G	216	1		1	4
	Armor units						
17	Sep tk bn (lt)	17-15T	581				
18	Tk bn, sep armd, inf, or inf (mech) bde	17-35G	599	2			6
19	Armd cav regt	17-51H	3,251	1		1	4
20	Sep air cav sqdn	17-195T	969	1			3
	SF units[g]						
21	Abn SF gp	31-105G	1,645				

[a] Str when equipped with MAB. Str increased by 17 when equipped with M4T6 bridging.
[b] 8 inf bn, 1 tk bn, 1 inf bn (mech) per div; also includes 1 ADA bn, CHAP/Vulcan, SP, TOE 44-325H.
[c] 6 tk bn, 5 inf bn (mech) per div; also includes 1 ADA bn, CHAP/Vulcan, SP, TOE 44-325H.
[d] 6 inf bn (mech), 4 tk bn per div; also includes 1 ADA bn, CHAP/Vulcan, SP, TOE 44-325H.
[e] 9 abn inf bn per div; also includes 1 ADA bn, CHAP/Vulcan, towed, TOE 44-425T.
[f] 9 ambl inf bn per div. Also includes 1 ADA bn, Vulcan, towed TOE 44-435.
[g] Under op comd of the US thtr comdr. Normally, fld army, corps, and div assume con of SF det when det are op within the army, corps, or div area of influence.

Table 1-3. Major Field Army Units—Combat Support Units

1	1 Unit	2 TOE	3 TOE str	4 Corps	5 FASCOM	6 Fld army	7 Total fld army
	FA units						
2	HHB, corps arty	6-501G	211	1			3
3	HHB, FA gp	6-401G	134	4			12
4	FA bn, 155-mm, towed	6-425G	562	2			6
5	FA bn, 175-mm, SP	6-435G	550	4			12
6	FA bn, 8-in, SP	6-445G	564	6			18
7	FA bn, 155-mm, SP	6-455G	506	4			12
8	FA bn, HJ	6-525G	378	2			6
9	FA bn, SGT	6-555G	377	1			3
10	FATAB	6-575G	768	1			3
11	FA bn, PSG	6-615G	1,680			1	1
12	FA btry, slt	6-558G	154				3
	ADA units						
13	HHB, ADA bde	44-2G	87			1	1
14	HHB, ADA gp	44-12G	85			5	5
15	ADA bn, Hawk	44-235G	767			7	7
16	ADA bn, Hawk, SP	44-255H	748			9	9
17	ADA bn, HERC	44-535G	910			6	6
18	ADA bn, CHAP (SP)/Vulcan (towed)	44-725G	647			6	6
	Avn units						
19	HHC, cbt avn gp	1-252G	78	1			3
20	HHC, cbt avn bn	1-256G	85	2	2		8
21	Avn aerial wpns co	1-111T	200	2			6
22	Corps avn co	1-127G	121	1			3
23	Survl airplane co	1-128G	221	1			3
24	AAVN co	1-137G	144			1	1
25	Avn ATC unit	1-207G	340			1	1
26	Aslt spt hel co	1-258H	198	4	4		16
27	Avn svc spt co	1-407G	165		1		1
28	Aslt hel co	7-357H	234	4			12
29	Hv hel co	55-259H	164		1		1
	CA units						
30	HHC, CA bde	41-201G	239			1	1
31	HHD, CA bn	41-500G[a]	122	(1)		4	4
32	CA co	41-500G[b]	144	(4)		16	16
	Cml units						
33	HHD, cml smoke genr bn	3-266G	30	1		1	4
34	Cml smoke genr co	3-267G	145	4		4	16
35	Cml det (CBRE)	3-500G (JA)	5	5	10	1	26
36	Cml det (CBR agt sampling and anal)	3-500G (KA)	2	1	1		4
37	Cml det (mech flamethrower)	3-500G (NB)	29	4			12
	Engr units						
38	HHC, engr cbt bde, army	5-101G	148			1	1
39	HHC, engr cbt bde, corps	5-101G	120	1			3
40	HHC, engr cbt gp	5-52G	109	2		3	9
41	Engr cbt bn, army or corps	5-35G	798	8		12	36
42	Engr topo bn, army	5-305G	368			1	1
43	Engr LE co	5-58G	210	2		3	9
44	Engr aslt brg co, mbl	5-64G	205	2			6

See footnotes at end of table.

Table 1-3. Major Field Army Units—Combat Support Units—Continued

1	1 Unit	2 TOE	3 TOE str	4 Corps	5 FASCOM	6 Fld army	7 Total fld army
	Engr units—continued						
45	Engr WS co	5-67G	114			1	1
46	Engr pnl brg co	5-77G	125	2		6	12
47	Engr fltbrg co	5-78G	229	2		6	12
48	Engr cam co	5-97G	74	1			3
49	Engr dptrk co	5-124G	114	2		3	9
50	Engr topo co	5-327G	142	1			3
51	Engr det (map distr plt)	5-540G (IH)	38	1			3
52	Engr det (terrain)	5-540G (IJ)	13	1		1	4
53	Engr plt (ADM)	5-570G[e]	27	2		3	9
	MI units						
54	MI bn, aerial recon spt, fld army	30-5G	318			1	1
55	MI bn, fld army	30-25G	752			1	1
56	MI co (div)	30-17G	85	4			12
57	MID, corps	30-18G	72	1			3
58	MID, armd cav regt	30-14G	32	1		1	4
59	MID, sep bde	30-14G	32	1			3
	MP units						
60	HHD, MP bde	19-262G	67			1	1
61	HHD, MP bn	19-76G	59	1		2	5
62	HHD, MP bn (comp)	19-500G (AD)	27			1	1
63	MP ESCRG co	19-47G	142			3	3
64	MP co	19-77G	186	4		10	22
65	MP phys scty co	19-97G	143	1			3
66	MP gd co	19-247G	127			2	2
67	MP det (crim inves)	19-500G (LA)	4	1			3
68	MP det (crim inves)	19-500G (LC)	27			1	1
69	MP det (admin overhead)	19-500G (MC)	40			1	1
70	MP det (hosp scty)	19-500G[d]	42			1	1
	PSYOP units						
71	PSYOP bn	33-500G[e]	150			1	1
72	PSYOP co	33-500G[f]	28	1			3
	Sig units						
73	HHC, army sig bde	11-102G	246			1	1
74	Corps sig bn	11-15G	1,137	1			3
75	Army comd sig rdo and cable bn	11-75G	888			1	1
76	Sig army area bn	11-85G	831			6	6
77	Army comd sig op bn	11-95G	1,088			1	1
78	ADA sig spt bn	11-175G	326			1	1
79	Sig op co, mdm HQ	11-127G	198		1		1
80	Sig small HQ op co	11-147G	119	(1)	4		4
81	ADA sig co	11-337G	190			5	5
	USASA units						
82	HHC, USASA gp	32-52G	251			1	1
83	HHC, USASA bn	32-56G	181	1			3
84	HHC, USASA avn bn	32-76G	99			1	1
85	USASA div spt co	32-57G	[g]231	4			12
86	USASA avn co	32-59G	201	1		1	4
87	USASA op co (A)	32-67G	347			3	3
88	USASA co (proc)	32-77G	236			1	1
89	USASA co (scty)	32-78G	133			1	1

[a] Tm AD, GB, HB, IB, JB, MB, PB, SB, TB, UB, VB, WB, ZB; also incl tm CA, CB, CC from TOE 29-500G and 3 tm DI from TOE 29-600G.
[b] Tm AC, 4 AB, GA, IA, 4 JA, 4 MA, 4 SA, 4 TA, 4 ZA; also incl tm CA, CB, CC from TOE 29-500G and 3 tm DI from TOE 29-600G.
[c] Tm MA, MB, 4MC.
[d] Tm FD, 7 IC, 2 IG.
[e] Tm AA—AC, BA, FA—FE, GC, GD.
[f] Tm AA, AB, HA, 2 HB, HC.
[g] For inf, abn, or ambi div spt co; 233 for armd or inf (mech) div spt co.

Table 1-4. Major Field Army Units—Combat Service Support Units

1	1 Unit	2 TOE	3 TOE str	4 Corps	5 FASCOM	6 Fld army	7 Total fld army
	Ammo units						
2	HHC, ord gp, ammo, DS/GS	9-22G	93	(1)	3	--------	3
3	HHC, ord bn, ammo, DS/GS	9-36G	102	(2)	6	--------	6
4	Ord co, ammo, convl, DS/GS	9-38G	309	(6)	18	--------	18
5	Ord sp ammo DS co	9-47G	198	(3)	9	--------	9
6	Ord sp ammo co, GS/DS	9-48G	174	(1)	3	--------	3
7	Pla maint and sup GS co	9-58G	407	--------	1	--------	1
8	Ord co, GM GS maint	9-59G	278	(1)	3	--------	3
9	Ord det (EOD)	9-520G (GA)	13	(5)	15	--------	15
10	Ord det (EOD con)	9-520G (GB)	11	(1)	3	--------	3
11	Ord det (mun safety con)	9-520G (GC)	10	(2)	6	--------	6
12	Rkt and msl spt det (DS)[a]	9-550T[b]	124	(2)	6	--------	6
13	Rkt and msl spt det (GS)[a]	9-550T[c]	121	(1)	3	--------	3
	Ch unit						
14	Ch prof tm[d]	29-500G (HA)	2	9	----------		27
	Fin unit						
15	Fin DS co[e]	14-17G	115	(4)	19	--------	19
	Hist unit						
16	MHD	20-17G	2	5	1	1	17
	JAG units[f]						
17	JAG det (HQ)	27-500G (AA)	4	--------	3	--------	3
18	JAG det (HQ)	27-500G (AB)	9	--------	1	--------	1
19	JAG det (claims svc inves)	27-500G (FA)	4	--------	6	--------	6
20	JAG det (claims svc con-adjudicating)	27-500G (FB)	10	--------	1	--------	1
21	JAG det (war crimes inves)	27-500G (GA)	4	--------	3	--------	3
22	JAG det (war crimes con)	27-500G (GB)	5	--------	1	--------	1
23	JAG det (GCM trial)	27-500G (HA)	6	--------	4	--------	4
24	JAG det (GCM trial)	27-500G (HB)	10	--------	2	--------	2
25	JAG det (legal asst)	27-500G (IA)	3	--------	6	--------	6
26	JAG det (legal asst)	27-500G (IB)	4	--------	1	--------	1
	Maint units						
27	HHD, maint DS or GS bn, army	29-136G	63	(6)	25	--------	25
28	HHD, trans acft maint GS bn	55-456G	61	--------	2	--------	2
29	Tire rep co	9-117G	160	--------	1	--------	1
30	LE GS maint co, army	29-134G	262	(2)	9	--------	9
31	Hv equip GS maint co, army	29-137G	298	(6)	24	--------	24
32	Coll and clas co	29-139G	216	(1)	4	--------	4
33	Lt maint co, DS	29-207G	213	(8)	32	--------	32
34	Maint co, rr, DS	29-208G	305	(4)	16	--------	16
35	Maint mgt det, FASCOM	29-403T	19	--------	1	--------	1
36	Maint mgt det, spt bde	29-403T	26	(1)	4	--------	4
37	Trans acft DS co	55-457G	265	(4)	16	--------	16
38	Trans acft maint GS co	55-458G	290	(4)	18	--------	18
	Med units						
39	HHD, med bde	8-112G	76	--------	1	--------	1
40	HHD, med gp (type A)	8-122G	41	(1)	6	--------	6
41	HHD, med bn	8-126G	40	(2)	9	--------	9

See footnotes at end of table.

Table 1-4. Major Field Army Units—Combat Service Support Units—Continued

1	2	3	4	5	6	7
Unit	TOE	TOE str	Corps	FASCOM	Fld army	Total fld army
Maint units—continued						
42 Cbt spt hosp	8-123T	215	(4)	24		24
43 Med amb co	8-127G	101	(4)	15		15
44 Med clr co	8-128G	133	(4)	15		15
45 Med coll co	8-129G	191		3		3
46 Med air amb co	8-137G	183	(1)	3		3
47 Med co, sep bde	8-147G	132	1		1	4
48 PVNTMED svc unit, fld	8-204G	124		1		1
49 Evac hosp	8-581G	318	(2)	12		12
50 Conv cen	8-590G	264		1		1
51 Med lab	8-650G	114		1		1
52 Army med dep	8-667G	226		1		1
53 Med det (co HQ)	8-600H (AC)	6		4		4
54 Med det (prof svc HQ)	8-600H (AG)	14		3		3
55 Med det (blood distr)	8-620H (NC)	8		1		1
56 Med det (disp)	8-620H (OA)	10		30		30
57 Med det (psychiatric)	8-620H (OM)	45		3		3
58 Med det (surgical)	8-630H (KA)	7		6		6
59 Med det (ortho)	8-630H (KB)	7		6		6
60 Med det (shock-intensive care)	8-630H (KC)	6		3		3
61 Med det (maxillofacial)	8-630H (KD)	7		3		3
62 Med det (neurosurgical)	8-630H (KE)	7		6		6
63 Med det (thoracic)	8-630H (KF)	7		3		3
64 Med det (trtmt-cml agent)	8-630H (LM)	14		1		1
65 Med det (radiology)	8-630H (MN)	3		1		1
66 Med det (hel amb)	6-660H (RA)	47		31		31
67 Med det (hel amb air crash rsq)	8-660H (RC)	14		18		18
68 Med det (hel amb air crash rsq) (aug)	8-660H (RD)	6		12		12
69 Med det (den svc HQ)	8-670G (AI)	13		5		5
70 Med det (den svc)	8-670G (HA)	56		28		28
71 Med det (den svc) (removable prosthodontics) (aug)	8-670G (HC)	5		7		7
72 Med det (den svc) (fixed prosthodontics) (aug)	8-670G (HD)	5		7		7
73 Med det (vet svc HQ)	8-680G (AF)	6		1		1
74 Med det (vet svc) (small)	8-680G (JA)	6		3		3
75 Med det (vet svc) (large)	8-680G (JB)	58		1		1
76 Med det (vet small-animal disp)	8-680G (JC)	8		6		6
77 Med det (vet small-animal hosp)	8-680G (JD)	16		1		1
78 Med det (intel)	30-600G (LP)	12		3		3
Pers and admin svc units						
79 HHD, P&A bn (fld army)	12-66G	51	(1)	4		4
80 PSC (type E)[g]	12-67G	220	(4)	17		17
81 SPS det	12-18G[h]	42	(1)	4		4
82 Army band	12-107G	43	(1)	5		5
83 Pstl svc org (APO)	12-550G[i]	37	(4)	16		16
84 Repl det (reg)	12-560G[j]	39	(4)	17		17
85 Admin svc det	12-570G	43	(1)	4		4
Pub info units						
86 Pub info det (fld svc) (press camp HQ)	45-500G (AE)	17		1		1
87 Pub info det (fld svc)	45-500G (FB)	5	(1)	4	1	5
88 Fld press cens det (op)	45-510G (BA)	17		1		1

See footnotes at end of table.

Table 1-4. Major Field Army Units—Combat Service Support Units—Continued

1	2	3	4	5	6	7
Unit	TOE	TOE str	Corps	FASCOM	Fld army	Total fld army
S&S units						
89 HHC, petrl sup bn	10-226G	84	(1)	5	----	5
90 HHC, S&S bn	29-146G	100	(3)	12	----	12
91 Petrl sup co	10-227G	306	(1)	6	----	6
92 QM airdrop sup co	10-407G	277	----	1	----	1
93 Fld svc co, GS, fwd	29-114G	228	(4)	12	----	12
94 Gen sup co, GS	29-118G	264	(4)	16	----	16
95 Rep parts sup co, GS, corps	29-119G	274	(2)	6	----	6
96 Rep parts sup co, GS, army	29-119G	300	----	2	----	2
97 Fld svc co, army, GS	29-124G	292	----	2	----	2
98 Hv mat sup co, GS	29-127G	207	(1)	5	----	5
99 Acft and msl rep parts sup co (GS)	29-129G	274	----	2	----	2
100 S&S co, DS	29-147G	303	(4)	16	----	16
101 Invt con co, FASCOM	29-402G	267	----	1	----	1
102 Stk con co, spt bde	29-404T	187	(1)	4	----	4
103 Engr det (fftg)	5-510G[k]	18	(1)	6	----	6
104 Engr det (gas genr)	5-520G (GB)	27	----	1	----	1
105 Engr det (CO_2 genr)	5-520G (GC)	13	----	1	----	1
106 Engr det (real estate)	5-530G (HC)	16	----	1	----	1
107 Engr det (util)	5-530G (HE)	31	(2)	6	----	6
108 Engr det (util)	5-530G (HF)	52	----	2	----	2
109 QM det (sales)	10-500G[l]	34	(1)	4	----	4
110 QM det (petrl prod lab) (mbl)	10-500G (JC)	7	(1)	4	----	4
Trans units						
111 HHC, trans bde, FASCOM	55-62G	135	----	1	----	1
112 HHD, TMT bn	55-16G	43	(1)	5	----	5
113 Trans MCC (FASCOM)	55-6H	44	----	1	----	1
114 Trans mov con co (corps spt bde)	55-7T	79	(1)	3	----	3
115 Trans lt trk co (2½-ton)	55-17G	175	----	2	----	2
116 Trans lt trk co (5-ton)	55-17G	176	(1)	3	----	3
117 Trans mdm trk co (cgo)	55-18G	177	----	4	----	4
118 Trans mdm trk co (petrl)	55-18G	177	(3)	15	----	15
119 Trans car co (SUPCOM)	55-19G	107	(1)	4	----	4
120 Trans hv trk co	55-28G	153	(1)	5	----	5
121 Trans lt-mdm trk co	55-67G	198	(6)	24	----	24
122 Trans tml trf co	55-118G	258	----	3	----	3

[a] Can he atch to any hn-size unit for comd and con.
[b] Tm EA-EE, 4EH, 2 EI, EL-EP. Spt Redeye, Shillelagh, HJ, TOW, CHAP/Vulcan, and FAAR.
[c] Tm EA-EF, 2 EH, EI, EL-EP. Spt Redeye, Shillelagh, HJ, TOW, CHAP/Vulcan, and FAAR.
[d] Under force ch for atch as rqr.
[e] Ea co spt 15,000 nondiv trp.
[f] Tm are TA trp asg to fld army, as rqr. They are used in fld army as army SJA des. When atch to FASCOM, COSCOM, or div spt bde, they op under the tech supv of SJA of the comd to which atch.
[g] Ea co can spt from 14,000 to 16,999 nondiv trp.
[h] Tm AB, 4 FA.
[i] Tm AB, FE, HE, JA.
[j] Tm AB, CB, 4 FA, GB.
[k] Tm FA-FC, 3 FD.
[l] Tm 7 BA, BB, BC.

Section III. DIVISIONS

1-8. General

a. This section presents data on the organization and equipment of the Army divisions and their subordinate elements. Organization charts and tables of selected items of equipment are included for the armored, infantry, infantry (mechanized), airborne, and airmobile divisions and their subordinate elements. These data are not intended to provide complete or exhaustive coverage of the types of divisions and their equipment, but are for use in general planning by staff officers of all echelons.

b. TOE data for the armored, infantry, and infantry (mechanized) divisions are based on the "H" series TOE published by DA. Data for the airborne division are based on the "G" series DA-published TOE. Data for the airmobile division are based on the "T" series USACDC-published TOE.

Note. Separate tables of selected items of equipment are not included for all subordinate elements of the types of divisions found in paragraphs 1-9, 1-10, and 1-11 below. In these instances, the information is located in the appropriate parent unit table. For example, the equipment listing for division headquarters and headquarters company, brigade headquarters and headquarters company, and military police company is found in tables 1-5, 1-6, 1-7, 1-27, and 1-39; the listing for division artillery headquarters and headquarters battery in tables 1-8, 1-28, and 1-40; and so forth.

1-9. Types of Armored, Infantry, and Infantry (Mechanized) Divisions

Figure 1-6 provides specific organizational structures and personnel strengths for types of armored, infantry, and infantry (mechanized) divisions found in a type of field army. Each of these three types of divisions has a division base and specific numbers of maneuver battalions. Tables 1-5, 1-6, and 1-7 are summaries of the three divisions' weapons and missiles, aircraft, ground support materiel, electronics, vehicles, and general equipment by class of supply. Figures 1-7 through 1-32 provide the organizational structures and personnel strengths for subordinate elements of these three types of divisions. Tables 1-8 through 1-26 are summaries of selected items of equipment for these subordinate elements.

Note. The capabilities of units shown in this paragraph are increased to the extent provided by augmentation personnel and equipment. Figures 1-6 through 1-32 portray augmentation personnel in two ways: when complete detachments, platoons, sections, or branches are added, augmentation is shown in broken-line boxes; when personnel are added to existing elements of units, augmentation is shown parenthetically in the boxes, as appropriate. Tables 1-5 through 1-26 show augmentation equipment parenthetically, as appropriate.

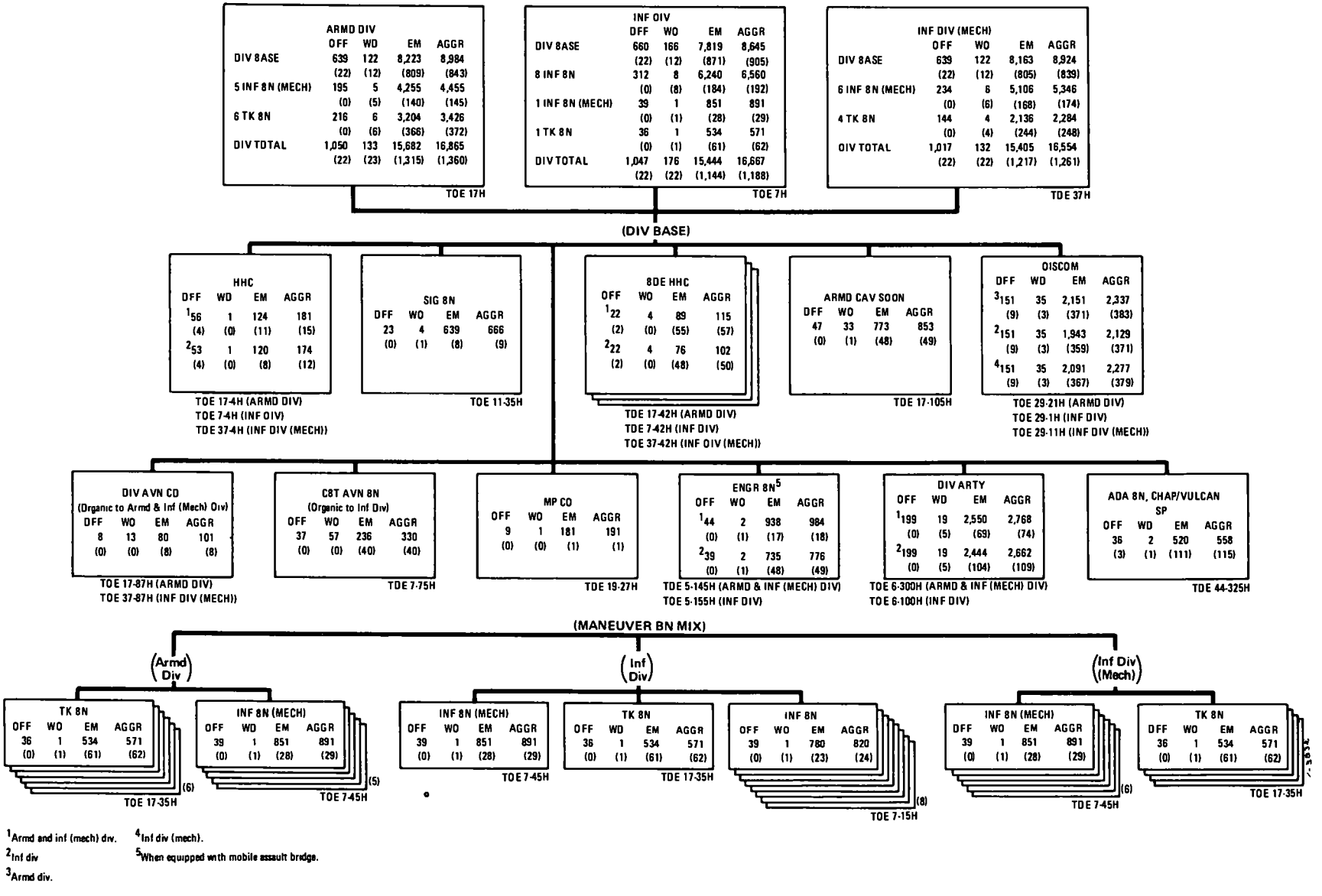

[1] Armd and inf (mech) div.
[2] Inf div
[3] Armd div.
[4] Inf div (mech).
[5] When equipped with mobile assault bridge.

Figure 1–6. Types of armored, infantry, and infantry (mechanized) divisions.

TOE 17H ARMD DIV

1. MISSION

To destroy enemy armed forces and to control land areas, including populations and resources.

2. ASSIGNMENT

To field army.

3. CAPABILITIES

a. This unit has the following capabilities:

(1) Conducts sustained combat operations against any type of opposing ground forces.

(2) Provides rapid movement, deep penetration, and pursuit over great distances.

(3) Exploits successes, including effects of nuclear and nonnuclear fires.

(4) Conducts covering force operations.

(5) Provides mobile defense.

(6) Provides counterattack and maneuvering force.

(7) Operates as part of a joint task force in amphibious operations.

(8) Provides protection against antitank, artillery, and nuclear fires.

(9) Provides control and administration for up to 15 maneuver battalions.

(10) Provides organic air defense against low-altitude hostile aircraft.

b. This unit has the following limitations:

(1) Heavy equipment cannot be lifted by Army aircraft.

(2) Mobility is restricted by jungle; dense forest; steep, rugged terrain; and water obstacles.

(3) Requires heavy logistic support, to include rail or highway transport of tracked vehicles for long administrative moves.

4. MOBILITY

Mobility of units organic to this division is included in appropriate component TOE extracts.

TOE 7H INF DIV

1. MISSION

To destroy enemy armed forces and to control land areas, including populations and resources.

2. ASSIGNMENT

To field army.

3. CAPABILITIES

a. This unit has the following capabilities:

(1) Conducts sustained combat operations against comparably equipped ground forces in difficult weather or terrain.

(2) Conducts airmobile operations, when provided necessary Army airlift.

(3) Operates as part of a joint task force in amphibious operations.

(4) Conducts air-landed operations as part of a joint task force.

(5) Controls enemy populations.

(6) Restores order.

(7) Provides logistic support to assigned and attached units.

(8) Provides control and administration for up to 15 maneuver battalions.

(9) Provides organic air defense against low-altitude hostile aircraft.

b. This unit has the following limitations:

(1) Limited airlift capability.

(2) Limited ground vehicular mobility.

(3) Limited protection against armor.

(4) Limited protection against conventional and nuclear fires.

4. MOBILITY

Mobility of units organic to this division is included in appropriate component TOE extracts.

Figure 1-6—Continued.

1. MISSION

To destroy enemy armed forces and to control land areas, including populations and resources.

2. ASSIGNMENT

To field army.

3. CAPABILITIES

a. This unit has the following capabilities:

(1) Provides decisive, highly mobile warfare against similarly or less well-equipped ground forces.

(2) Provides rapid movement, deep penetration, and pursuit over great distances.

(3) Exploits successes, including effects of nuclear and nonnuclear fires.

(4) Conducts covering force operations.

(5) Provides mobile defense.

(6) Conducts amphibious operations as part of a joint task force.

(7) Provides control and administration for up to 15 maneuver battalions.

(8) Provides air defense against low-altitude hostile aircraft.

(9) Can conduct airmobile operations, when supported by non-organic aircraft.

b. This unit has the following limitations:

(1) When employed in airmobile operations, committed elements lose much of their shock effect and ground mobility.

(2) Mobility is restricted by jungle; dense forest; steep, rugged terrain; and water obstacles.

(3) Requires heavy logistic support to maintain its mobility and striking power.

4. MOBILITY

Mobility of units organic to this division is included in appropriate component TOE extracts.

Figure 1–6—Continued.

Table 1-5. Summary of Equipment—Type of Armored Division (With Mobile Assault Bridge)

1	2	3	4	5	6	7	8	9	10	11	12	13	14	15
LIN	Nomenclature	HHC (17-4H)	MP co (19-27H)	Div avn co (17-87H)	Sig bn (11-35H)	Engr bn (5-145H)	3 bde HHC (17-42H) (ea)	Armd cav sqdn (17-105H)	Div arty (6-300H)	DISCOM (29-21H)	ADA bn (44-325H)	6 tk bn (17-35H) (ea)	5 inf bn (mech) (7-45H) (ea)	Div total (17H)
	CLASS 20—GENERAL EQUIPMENT													
1 Z13157	CARD PUNCH MACHINE + ADPE.	0	0	0	0	0	0	0	0	9	0	0	0	9
2 Z15494	COLLATOR + ADPE	0	0	0	0	0	0	0	0	2	0	0	0	2
3 Z20571	DATA TRANSCEIVER CARD UNIT + ADPE.	0	0	0	0	0	0	0	0	4	0	0	0	4
4 Z20669	DATA TRANSMISSION EQUIPMENT + ADPE.	0	0	0	0	0	0	0	0	1	0	0	0	1
5 Z25208	ELECTRONIC COMPUTER + ADPE.	0	0	0	0	0	0	0	0	2	0	0	0	2
6 Z35210	INTERPRETER + ADPE	0	0	0	0	0	0	0	0	2	0	0	0	2
7 Z74660	SORTER + ADPE	0	0	0	0	0	0	0	0	3	0	0	0	3
8 Z95673	VERIFIER + ADPE	0	0	0	0	0	0	0	0	7	0	0	0	7
	CLASS 7A—AIR													
9 K29660	HELICOPTER ATTACK + AH-1G	0	0	0	0	0	0	9	0	0	0	0	0	9
10 K30645	HELICOPTER OBSERVATION + OH-6A.	0	0	6	0	0	4	9	9	0	0	0	0	36
11 K31749	HELICOPTER UTILITY + UH-1B	0	0	0	0	0	0	0	2	0	0	0	0	2
12 K31795	HELICOPTER UTILITY, UH-1H	0	0	4	0	0	0	8	0	2	0	0	0	14
	CLASS 7B—GROUND SUPPORT													
13 C20414	BRIDGE ARMOR VEH LAUNCH SCISSOR-TY + CL 60 ALUM 60 FT LG OF SPAN.	0	0	0	0	6	0	0	0	0	0	2	0	18
14 C25757	BRIDGE FLOATING + RAFT SECT LIGHT TACTICAL.	0	0	0	0	2	0	0	0	0	0	0	0	2
15 C29490	BUCKET CLAMSHELL + 3/4 CU YD.	0	0	0	0	2	0	0	0	0	0	0	0	2
16 C30997	BUCKET DRAGLINE + 3/4 CU YD.	0	0	0	0	1	0	0	0	0	0	0	0	1
17 E67735	COMP RCP PWR DRVN + BASE AC 115V-60 CY 1 PH 2.7 CFM 80 PSI.	0	0	0	0	0	0	0	0	1	0	0	0	1
18 E69242	COMP RCP PWR DRVN + AIR REC GAS DRVN 15 CFM 175 PSI.	0	0	0	1	1	1	1	5	5	0	1	1	27

19	E70064	COMP RCP PWR DRVN + TRK 2 WHL PNEU TIRES GAS DRVN 5 CFM 175 PSI.	1	2	1	3	5	0	5	24	13	5	5	4	109
20	E73626	COMP RTY PWR DRVN + AIR WHBRW FR-2 PNU TIRE GAS DRV 60 CFM 6.5 PSI.	0	0	0	0	2	0	0	0	6	0	0	0	8
21	F39241	CRANE WHEEL MTD + 5 TON 3/8 CU YD DSL 4×4 ROUGH TERRN AIR TRNSPT.	0	0	0	0	0	0	0	0	4	0	0	0	4
22	F39378	CRANE WHEEL MTD + 20 TON 3/4 CU YD ROUGH TERRAIN.	0	0	0	0	3	0	0	0	0	0	0	0	3
23	H32869	FAIRLEAD ROLLER AND SHEAVE + 12-1/2T CR-SHVL CRLR 20T CR-SHVL TRK.	0	0	0	0	2	0	0	0	0	0	0	0	2
24	H38787	FERRY CONVERSION SET RAFT + INF SPT.	0	0	0	0	2	0	0	0	0	0	0	0	2
25	H56391	FIRE FIGHT EQUIP SET + TRK MTD ARMY AIRCRAFT CRASH OS CL 530B.	0	0	1	0	0	0	0	0	0	0	0	0	1
26	J35561	GEN ST DSL ENG TM + 45KW 60CY 3PH AC 120/208 240/416V PU-407/M.	0	0	0	2	0	0	0	0	0	0	0	0	0
27	J35698	GEN ST DSL ENG TRK MTD + 45KW 60CY 3PH AC 120/208 240/416V PU408M.	0	0	0	2	0	0	0	0	0	0	0	0	0
28	J35835	GEN ST DSL ENG + 15KW 60CY 3PH AC 120/208 240/416V SKID.	2	0	0	0	0	0	0	0	1	0	0	0	3
29	J36109	GEN ST DSL ENG + 30KW 60CY 3PH AC 120/208 240/416V 50CY SKID.	0	0	0	0	0	0	0	0	3	0	0	0	0
30	J41041	GENERATOR SET GASOLINE ENGINE TRAILER MTD + PU-253/U.	0	0	1	0	0	0	0	0	0	0	0	0	1
31	J41452	GENERATOR SET GASOLINE ENGINE TRAILER MTD + PU-304 MPQ-4A.	0	0	0	0	0	0	0	3	0	0	0	0	3
32	J41589	GENERATOR SET GASOLINE ENGINE TRAILER MTD + PU-322/G.	0	0	2	6	0	0	0	1	0	0	0	0	9
33	J42685	GEN ST GAS ENG + 0.3 KW AC 115V 1-PH 400CY DC 24 TO 35V.	0	0	0	0	0	0	6(2)	0	0	0	3(3)	4(6)	44(50)
34	J43233	GEN ST GAS ENG + 0.5KW 2 WIRE DC-28V SHK.	0	0	0	0	0	0	0	0	0	0	0	0	0
35	J43918	GEN ST GAS ENG + 1.5KW 60CY 1PH 2 WIRE AC 120V SHOCK.	2	2	3	2	6	4	8	32	50(1)	9	8	5	211(1)
36	J44055	GEN ST GAS ENG + 1.5KW DC 28V SHOCK.	0	0	1	0	9	2	6	7	27	22(3)	1	2	101(3)

Table 1-5. Summary of Equipment—Type of Armored Division (With Mobile Assault Bridge)—Continued

1 LIN	2 Nomenclature	3 HHC (17-4H)	4 MP co (19-27H)	5 Div avn co (17-87H)	6 Sig bn (11-35H)	7 Engr bn (5-145H)	8 3 bde HHC (17-42H) (ea)	9 Armd cav sqdn (17-105H)	10 Div arty (6-300H)	11 DISCOM (29-21H)	12 ADA bn (44-325H)	13 6 tk bn (17-35H) (ea)	14 5 inf bn (mech) (7-45H) (ea)	15 Div total (17H)
37 J45699	GEN ST GAS ENG + 3KW 60CY 1-3PH 120/240V 120/208V SKID SHOCK.	0	0	1	0	16	4	1	2	3	0	1	0	38
38 J47068	GEN ST GAS ENG + 5KW 60CY 1-3PH AC 120/240 120/208V SKD-SHK MTD.	3	0	0	0	0	0	0	0	8	0	0	1	15
39 J49055	GEN ST ENG + 7.5 KW DC 28.5 V WHL MTD.	0	0	0	0	0	0	0	0	1	0	0	0	0
40 J74852	GRADER ROAD MOTORIZED + DSL DRVN-HVY 6×4 FRONT-WHL STEER.	0	0	0	0	4	0	0	0	0	0	0	0	4
41 L01326	ION EXCHANGE UNIT WATER PURIFICATION TRUCK MTD + 3000GPH MAX FLOW.	0	0	0	0	1	0	0	0	0	0	0	0	1
42 L43664	LAUNCH M60 SERIES TANK CHASS TRN-SPTG + 40 AND 60 FT BRDGE TY CL60.	0	0	0	0	4	0	0	0	0	0	2	0	16
43 P11866	PNEUMATIC TOOL AND COMPRESSOR OUTFIT + 250 CFM TRLR MTD.	0	0	0	0	5	0	0	0	0	0	0	0	5
44 P91756	PUMP CENTRF + GAS DRVN FRAME MTD—1-1/2 IN 65GPM 50 FT HD.	0	0	0	0	4	0	0	0	0	0	0	0	4
45 P92030	PUMP CENTRF + GAS DRVN FRAME MTD—2 IN 125 GPM 50 FT HD.	0	0	0	0	5	0	0	0	0	0	0	0	5
46 P96640	PUMPING ASSEMBLY FLAMMABLE LIQUID BULK TRANSFER +.	0	0	0	0	0	1	2	1	8	0	0	0	14
47 V09730	TAGLINE CRANE AND CRANE-SHOVEL +3/4 to 1 CU YD BUCKET.	0	0	0	0	2	0	0	0	0	0	0	0	2
48 W76816	TRACTOR FULL TRCKD LOW SPD + DSL-MED DBP W/ BULDOZ W/SCARIF WINCH.	0	0	0	0	7	0	0	0	0	0	0	0	8
49 X48914	TRUCK LIFT FORK + DSL DRVN 6000 LB CAP ROUGH TERRAIN.	0	0	0	0	1	0	0	0	5	0	0	0	6
50 Y35486	WATER PURIF EQUIP SET + TRK MTD DIATOMITE FILTER 1500 GPH (ARMY).	0	0	0	0	5	0	0	0	0	0	0	0	5

		CLASS 7G—ELECTRONICS													
51	Q15414	RADAR SET + AN/MPQ-4 LESS POWER.	0	0	0	0	0	0	0	3	0	0	0	0	3
52	Q16109	RADAR SET + AN/PPS-5 LESS POWER.	0	0	0	0	0	0	6 (2)	0	0	0	3 (3)	4 (6)	50 (50)
53	Q17332	RADAR SET + AN/TPS-25 LESS POWER.	0	0	0	0	0	0	0	1	0	0	0	0	1
54	Q32756	RADIO SET AN/GRC-106	1 (3)	0	0	0	0	1 (1)	6	1	0 (3)	5 (25)	0	0	18 (34)
55	Q34308	RADIO SET AN/GRC-160	0	0	0	0	47	0	29	53	0	0	12 (3)	47	436 (18)
56	Q38299	RADIO SET + AN/PRC-77	3	0	0	7	19	2 (1)	18	32	0	0	3	34 (6)	282 (33)
57	Q42092	RADIO SET + AN/URC-10	0	0	10	0	0	4	26	11	2	0	0	0	61
58	Q45779	RADIO SET AN/VRC-12	3	0	0	0	0	0 (2)	23	0	0	0	10	3	101 (6)
59	Q53001	RADIO SET AN/VRC-46	8 (3)	40	0	21	24	11 (1)	33 (5)	128	24 (3)	19 (8)	25 (1)	18	636 (28)
60	Q54154	RADIO SET AN/VRC-47	1	1	2	10	17	5	19	30	25	73 (15)	15	20	412 (15)
61	Q55114	RADIO SET AN/VRC-49	0	4	0	6	1	1	1	19	0	1 (9)	1	1	46 (9)
62	Q55510	RADIO SET AN/VRC-53	0	1	0	0	0	0	0	0	0	0	0	0	1
63	Q56783	RADIO SET AN/VRC-64	0	0	1	0	28	1 (4)	45	9	1	0	82	55	759 (12)
64	Q90120	RADIO TELETYPEWRITER SET + AN/GRC-142 LESS POWER.	0	0	0	22	2	0	0	21	0	2	0	0	47
65	Q92893	RADIO TERMINAL SET AN/TRC-145.	0	0	0	21	0	0	0	0	0	0	0	0	21
66	R78061	REPEATER SET RADIO AN/TRC-113.	0	0	0	19	0	0	0	0	0	0	0	0	19
67	U81707	SWITCHBOARD TELEPHONE MANUAL + SB-22/PT.	0	1	1	7	7	2	5	35	7	16	3	7	144
68	U82255	SWITCHBOARD TELEPHONE MANUAL + SB-86/P.	0	0	0	0	0	0	0	2	0	1	0	0	3
69	U82529	SWITCHBOARD TELEPHONE MANUAL + SB-993/GT.	0	0	0	0	12	0	0	26	11	0	4	6	103
70	V30252	TELEPHONE SET + TA-1/PT	0	0	0	0	52	0 (4)	28	24	10	40	30	75	661 (12)
71	V30937	TELEPHONE SET + TA-264/PT	0	0	1	0	0	0	2	7	5	0	0	0	15
72	V31211	TELEPHONE SET + TA-312/PT	1	11	17	279	59	22 (1)	36 (2)	566	144 (4)	196 (29)	28 (3)	53 (6)	1861 (86)
73	V41968	TELETYPEWRITER SET + AN/GGC-3.	1	0	0	0	0	1	0	0	0	1	0	0	5
74	V42105	TELETYPEWRITER SET + AN/PGC-1.	1	0	1	0	0	1	0	2	0	1	0	0	8
		CLASS 7K—TACTICAL VEHICLES													
75	D11401	CARRIER COMMAND AND RECONNAISSANCE + ARMORED.	0 (3)	0	0	0	0	1 (2)	50	0	0	0	9	15	179 (9)
76	D11538	CARRIER COMMAND POST + LIGHT TRACKED.	2	0	0	0	1	5	6	35	0	0	7	7	138
77	D12086	CARRIER PERSONNEL FULL TRACKED + ARMORED.	0	0	0	0	43	0 (4)	24 (2)	0	0	8	10	47	358 (14)

Table 1-5. Summary of Equipment—Type of Armored Division (With Mobile Assault Bridge)—Continued

1 LIN		2 Nomenclature	3 HHC (17-4H)	4 MP co (19-27H)	5 Div avn co (17-87H)	6 Sig bn (11-35H)	7 Engr bn (5-145H)	8 3 bde HHC (17-42H) (ea)	9 Armd cav sqdn (17-105H)	10 Div arty (6-300H)	11 DISCOM (29-21H)	12 ADA bn (44-325H)	13 6 tk bn (17-35H) (ea)	14 5 inf bn (mech) (7-45H) (ea)	15 Div total (17H)
78	E02670	CHASSIS TRAILER + GENERAL PURPOSE 3-1/2 TON 2 WHEEL W/E.	0	0	0	0	0	0	0	0	4 (2)	0	0	0	6 (2)
79	E02807	CHASSIS TRAILER + GENERATOR 2-1/2 TON 2 WHEEL W/E.	0	0	0	0	0	0	0	0	4	0 (6)	0	0	3 (6)
80	K90188	INSTRUMENT REPAIR SHOP TRUCK MOUNTED + 2-1/2 TON 6×6 W/E.	0	0	0	0	0	0	0	0	12	0	0	0	12
81	S70243	SEMITRAILER LOW BED + WRECKER 12-TON 4 WHEEL 40 FT W/E.	0	0	0	0	0	0	0	0	1	0	0	0	1
82	S70517	SEMITRAILER LOW BED + 25 TON 4 WHEEL W/E.	0	0	0	0	10	0	0	0	0	0	0	0	10
83	S72024	SEMITRAILER STAKE + 12 TON 4 WHEEL W/E.	0	0	0	0	0	0	0	0	37	0	0	0	37
84	S72983	SEMITRAILER TANK + FUEL SERVICING 5000 GALLON 12 TON 4 WHEEL W/E.	0	0	0	0	0	0	0	0	30	0	0	0	30
85	S73394	SEMITRAILER TANK TRANSPORTER + 50 TON 8 WHEEL W/E.	0	0	0	0	0	0	0	0	6	0	0	0	6
86	S74079	SEMITRAILER VAN + CARGO 12 TON 4-WHEEL W/E.	0	0	0	0	0	0	0	0	9	0	0	0	9
87	S74490	SEMITRAILER VAN + EXPANSIBLE 6 TON 4 WHEEL W/E.	0	0	0	0	0	0	0	0	9 (3)	0	0	0	10 (3)
88	W94030	TRAILER AMMUNITION + 1-1/2 TON 2-WHEEL W/E.	0	0	0	0	0	0	2	103	0	0	0	0	105
89	W94441	TRAILER BASIC UTILITY + 2-1/2 TON 2 SINGLE WHEELS W/E.	0	0	0	0	2	0	0	0	0	0	0	0	0
90	W95263	TRAILER CABLE REEL + 3-1/2 TON 2-WHEEL W/E.	0	0	0	0	2	0	0	0	0	0	0	0	2
91	W95400	TRAILER CARGO + 1/4 TON 2 WHEEL W/E.	29	45 (1)	2	21	28	14	15	86	79 (1)	28 (17)	14 (3)	42 (6)	672 (67)
92	W95537	TRAILER CARGO + 3/4 TON 2 WHEEL W/E.	3	6	5	24	12	6	6	84	51 (14)	34 (26)	5	11	323 (40)
93	W95811	TRAILER CARGO + 1-1/2 TON 2 WHEEL W/E.	7	2	4	18	41	5	22	72	202 (10)	36	24	20	657 (10)
94	W98825	TRAILER TANK + WATER 400 GALLON 1-1/2 TON 2 WHEEL W/E.	1	1	1	3	6	1	5	25	19	5	5	5	116

95	X38639	TRUCK AMBULANCE + 1/4 TON 4×4 W/E.	0	0	0	0	1	0	3	0	0	0	3	3	37
96	X38776	TRUCK AMBULANCE + 3/4 TON 4×4 WE.	2	0	0	0	0	0	0	6	32 (4)	1	0	0	41 (4)
97	X39735	TRUCK CARGO + 3/4 TON 4×4 W/E.	4	6	9	122	31	8	10	118	56 (15)	40 (15)	4	5	469 (30)
98	X39872	TRUCK CARGO + 3/4 TON 4×4 W/WINCH W/E.	0	0	0	0	0	1	0	58	4	0	6	6	191
99	X40009	TRUCK CARGO + 2-1/2 TON 6×6 W/E. ¾	4	1	3	24	23	4	12	64	179 (10)	33	7	10	473 (10)
100	X40146	TRUCK CARGO + 2-1/2 TON 6×6 W/WINCH W/E.	1	2	5	19	17	1	14	38	28 (1)	11	16	5	247 (1)
101	X40283	TRUCK CARGO + 2-1/2 TON 6×6 XLWB W/E.	0	0	0	0	0	0	0	2	0	2 (3)	0	0	4 (3)
102	X40831	TRUCK CARGO + 5 TON 6×6 LWB W/E.	0	0	0	0	6	0	11	48	0	6	13	6	179
103	X40968	TRUCK CARGO + 5 TON 6×6 LWB W/WINCH W/E.	0	0	0	0	0	0	9	70	0	0	7	8	161
104	X43845	TRUCK DUMP + 5 TON 6×6 W/ WINCH W/E.	0	0	0	0	22	0	0	0	0	0	0	0	22
105	X57271	TRUCK TANK + FUEL SERVICING 2-1/2 TON 6×6 W/E.	0	0	4	0	0	1	4	1	2	0	1	0	20
106	X57408	TRUCK TANK + FUEL SERVICING 2-1/2 TON 6×6 W/WINCH W/E.	0	0	0	2	0	0	0	0	0	0	0	0	2
107	X59052	TRUCK TRACTOR + 2-1/2 TON 6×6 W/E.	0	0	0	0	0	0	0	0	2	0	0	0	2
108	X59189	TRUCK TRACTOR + 2-1/2 TON 6×6 W/WINCH W/E.	0	0	0	0	0	0	0	0	1	0	0	0	1
109	X59326	TRUCK TRACTOR + 5 TON 6×6 W/E.	0	0	0	0	1	0	0	0	89	0	0	0	93
110	X59463	TRUCK TRACTOR + 5 TON 6×6 W/WINCH W/E.	0	0	0	0	0	0	0	0	1	0	0	0	1
111	X59600	TRUCK TRACTOR + 10 TON 6×6 W/DUAL MIDSHIP WN W/HI MTD 5TH WHL W/E.	0	0	0	0	0	0	0	0	6	0	0	0	6
112	X59874	TRUCK TRACTOR + 10 TON 6×6 W/MIDSHIP WINCH W/LOW MTD 5TH WHL W/E.	0	0	0	0	10	0	0	0	0	0	0	0	10
113	X60696	TRUCK TRACTOR WRECKER + 5 TON 6×6 W/WINCH W/E.	0	0	0	0	0	0	0	0	1	0	0	0	1
114	X60833	TRUCK UTILITY + 1/4 TON 4×4 W/E.	33	45 (1)	2	31	28	18	32	163	91 (1)	30 (17)	37 (3)	34 (6)	856 (67)
115	X61244	TRUCK UTILITY + 1/4 TON 4×4 CARRIER FOR 106 MM RIFLE W/E.	0	0	0	0	0	0	0	0	0	0	0	8	40
116	X62340	TRUCK VAN + SHOP 2-1/2 TON 6×6 W/E.	4	0	2	0	1	0	1	14	39 (2)	1 (3)	0	2	72 (5)

Table 1-5. Summary of Equipment—Type of Armored Division (With Mobile Assault Bridge)—Continued

1 LIN	2 Nomenclature	3 HHC (17-4H)	4 MP co (19-27H)	5 Div avn co (17-37H)	6 Sig bn (11-35H)	7 Engr bn (5-145H)	8 3 bde HHC (17-42H) (ea)	9 Armd cav sqdn (17-105H)	10 Div arty (6-300H)	11 DISCOM (29-21H)	12 ADA bn (44-325H)	13 6 tk bn (17-35H) (ea)	14 5 inf bn (mech) (7-45H) (ea)	15 Div total (17H)
117 X62477	TRUCK VAN + SHOP 2-1/2 TON 6×6 W/WINCH W/E.	0	0	0	0	0	0	0	3	1	4	0	0	8
118 X63299	TRUCK WRECKER + 5 TON 6×6 W/WINCH W/E.	0	0	0	1	1	0	3	9	11	5	3	1	41
	CLASS 7L—MISSILES													
119 J95533	GUIDED MISSILE SYSTEM INTERCEPT—CARRIER MTD, (CHAPARRAL).	0	0	0	0	0	0	0	0	0	24	0	0	24
120 K27486	HEATING AND TIE-DOWN UNIT 762MM ROCKET TRK MTD + W/E (HONEST JN).	0	0	0	0	0	0	0	8	0	0	0	0	8
121 L45534	LAUNCHER ROCKET + 762MM TRUCK MOUNTED W/E (HONEST JOHN).	0	0	0	0	0	0	0	4	0	0	0	0	4
	CLASS 7M—WEAPONS													
122 A89819	ARMAMENT POD AIRCRAFT 7.62 MILLIMETER MACHINE GUN + W/E.	0	0	0	0	0	0	10	0	0	0	0	0	10
123 A90117	ARMAMENT SUBSYSTEM HELICOPTER 7.62 MILLIMETER MACHINE GUN + LIGHT.	0	0	0	0	0	0	6	0	0	0	0	0	6
124 A90122	ARMAMENT SUBSYSTEM HELICOPTER 7.62 MM MACHINE GUN + DOOR MTD L W.	0	0	0	0	0	0	2	0	0	0	0	0	2
125 A90154	ARMAMENT SUBSYSTEM HELICOPTER 7.62MM MACHINE GUN + HIGH RATE.	0	0	0	0	0	0	9	0	0	0	0	0	9
126 A90436	ARMAMENT SUBSYS HEL 7.62 MM MG—40MM GRENADE LNCHR + HIGH RATE.	0	0	0	0	0	0	9	0	0	0	0	0	9
127 A93124	ARMORED RECONNAISSANCE AIRBORNE-ASSAULT VEHICLE +.	0	0	0	0	0	0	27	0	0	0	0	0	27
128 E56577	COMBAT ENGINEER VEHICLE FULL TRACKED +.	0	0	0	0	8	0	0	0	0	0	0	0	8

129	G02204	DETECTING SET MINE + PTBL METALLIC AND NON METALLIC.	0	4	0	7	62	0	10	24	2	5	5	1	149
130	G02341	DETECTING SET MINE + PTBL METALLIC.	0	4	0	13	49	0	10	24	2	5	5	3	152
131	J96694	GUN ANTIAIRCRAFT ARTILLERY SELF-PROPELLED + 20MM.	0	0	0	0	0	0	0	0	0	24	0	0	24
132	K56981	HOWITZER HEAVY SELF PROPELLED + 8 INCH.	0	0	0	0	0	0	0	12	0	0	0	0	12
133	K57666	HOWITZER MEDIUM SELF PROPELLED + 155MM.	0	0	0	0	0	0	0	54	0	0	0	0	54
134	L44505	LAUNCHER GRENADE + 40 MILLIMETER.	0	0	0	0	0	0	0	0	0	0	0	54	1069
135	L91975	MACHINE GUN CALIBER .50 + HB FLEXIBLE FOR GROUND USE.	2	0	0	0	0	3	32	0	0 (4)	0	24	46	317 (4)
136	L92386	MACHINE GUN 7.62 MILLIMETER + LIGHT FLEXIBLE.	0	9	3	10	15	0 (5)	13	165	69 (1)	20	4	49	549 (16)
137	M68008	MORTAR 81 MILLIMETER + ON MOUNT.	0	0	0	0	0	0	0	0	0	0	0	9	45
138	M68282	MORTAR 4.2 INCH + ON MOUNT.	0	0	0	0	0	0	9	0	0	0	4	4	53
139	M75577	MOUNT TRIPOD MACHINE GUN + HEAVY-CALIBER 50.	2	0	0	0	0	3	32	0	0 (4)	0	24	26	317 (4)
140	M75714	MOUNT TRIPOD MACHINE GUN + 7.62 MILLIMETER.	0	5	3	10	15	0 (5)	13	165	69 (1)	20	4	49	544 (16)
141	N96741	PISTOL CALIBER .45 AUTOMATIC +.	32 (3)	149	0	24	76	18 (18)	178 (2)	94	88	25	280	174	3177 (59)
142	R50543	RECOVERY VEHICLE FULL TRACKED + LIGHT ARMORED.	0	0	0	0	0	1	5	8	0	5	1	6	13
143	R50680	RECOVERY VEHICLE FULL TRACKED + MEDIUM.	0	0	0	0	2	0	0	1	4	0	5	0	37
144	R91107	REVOLVER CALIBER .38 + 2 INCH BARREL.	0	2	0	0	0	0	0	0	0	0	0	0	2
145	R91244	REVOLVER CALIBER .38 + 4 INCH BARREL.	3	0	27	0	0	4	62 (15)	18	14	0	0	0	136 (15)
146	R94977	RIFLE 5.56 MILLIMETER + W/E..	153 (2)	186 (1)	74 (8)	636 (9)	912 (78)	93 (39)	637 (32)	2654 (74)	2189 (290)	532 (121)	284 (38)	717 (73)	13735 (1325)
147	R96484	RIFLE RECOILLESS 90 MILLIMETER +.	0	9	0	0	0	0 (2)	0	0	0	0	0	18	99 (6)
148	R96758	RIFLE RECOILLESS 106 MILLIMETER + ON MOUNT.	0	0	0	0	0	0	0	0	0	0	0	8	40
149	U56346	SUBMACHINE GUN CALIBER .45 +.	0	0	0	0	0	8 (2)	38	0	0	0	120	12	842 (6)
150	V13100	TANK COMBAT FULL TRACKED + 105MM-GUN.	0	0	0	0	0	0	0	0	0	0	54	0	324
		CLASS 7N—SPECIAL WEAPONS													
151	H68063	FLAME THROWER PORTABLE +.	0	0	0	0	0	0	0	0	0	0	0	9	45

Table 1-5. Simmary of Equipment—Type of Armored Division (With Mobile Assault Bridge)—Continued

1 LIN	2 Nomenclature	3 HHC (17-4H)	4 MP co (19-27H)	5 Div avn co (17-37H)	6 Sig bn (11-35H)	7 Engr bn (5-145H)	8 3 bde HHC (17-42H) (ea)	9 Armd cav sqdn (17-105H)	10 Div arty (6-300H)	11 DISCOM (29-21H)	12 ADA bn (44-325H)	13 6 tk bn (17-35H) (ea)	14 5 inf bn (mech) (7-45H) (ea)	15 Div total (17H)
	CLASS 7Q—GENERAL EQUIPMENT													
152 B83856	BOAT LANDING INFLATABLE + ASSAULT CRAFT NYLON CLOTH 15 MAN.	0	0	0	0	18	0	0	0	0	0	0	0	18
153 B84404	BOAT RECONNAISSANCE + PNEUMATIC 3-MAN.	0	0	0	0	32	0	0	0	0	0	0	0	32
154 J04716	FUEL SYSTEM SUPPLY POINT + PORTABLE 6000 GAL CAP.	0	0	0	0	0	0	0	0	1	0	0	0	1
155 T10138	SHOP EQUIP CONTACT MAINT TRK MTD +.	0	0	0	0	2	0	0	0	1	0	0	0	3
156 T10275	SHOP EQUIP ELEC REP SEMI-TRLR MTD + ARMY.	0	0	0	0	0	0	0	0	1	0	0	0	1
157 T13152	SHOP EQUIP ORGANZL REP LIGHT TRK MTD +.	0	0	0	0	1	0	0	0	0	0	0	0	1
158 V12141	TANK AND PUMP UNIT LIQUID DISPENSING TRUCKMOUNTING +.	0	0	0	0	6	0	5	10	10	9	5	4	90
159 V19950	TANK UNIT LIQUID DISPENSING TRAILER MOUNTING +.	0	0	0	0	6	0	0	8	8	5	5	4	77

Table 1–6. Summary of Equipment—Type of Infantry Division (With Mobile Assault Bridge)

1	2	3	4	5	6	7	8	9	10	11	12	13	14	15	16
LIN	Nomenclature	HHC (7–4H)	MP co (19–27H)	Cbt avn bn (7–75H)	Sig bn (11–35H)	Engr bn (5–155H)	3 bde HHC (7–42H) (ea)	Armd cav sqdn (17–105H)	Div arty (6–100H)	DISCOM (29–1H)	ADA bn (44–325H)	Inf bn (mech) (7–45H)	Tk bn (17–35H)	8 inf bn (7–15H) (ea)	Div total (7H)
	CLASS 2Q—GENERAL EQUIPMENT			—											
1 Z13157	CARD PUNCH MACHINE + ADPE.	0	0	0	0	0	0	0	0	9	0	0	0	0	9
2 Z15494	COLLATOR + ADPE	0	0	0	0	0	0	0	0	2	0	0	0	0	2
3 Z20571	DATA TRANSCEIVER CARD UNIT + ADPE.	0	0	0	0	0	0	0	0	4	0	0	0	0	4
4 Z20669	DATA TRANSMISSION EQUIPMENT + ADPE.	0	0	0	0	0	0	0	0	1	0	0	0	0	1
5 Z25208	ELECTRONIC COMPUTER + ADPE.	0	0	0	0	0	0	0	0	2	0	0	0	0	2
6 Z35210	INTERPRETER + ADPE	0	0	0	0	0	0	0	0	2	0	0	0	0	2
7 Z74660	SORTER + ADPE	0	0	0	0	0	0	0	0	3	0	0	0	0	3
8 Z95673	VERIFIER + ADPE	0	0	0	0	0	0	0	0	7	0	0	0	0	7
	CLASS 7A—AIR														
9 K29660	HELICOPTER ATTACK + AH–1G.	0	0	6	0	0	0	9	0	0	0	0	0	0	15
10 K30645	HELICOPTER OBSERVATION + OH–6A.	0	0	4	0	0	4	9	9	0	0	0	0	0	34
11 K31749	HELICOPTER UTILITY + UH–1B.	0	0	0	0	0	0	0	2	0	0	0	0	0	2
12 K31795	HELICOPTER UTILITY, UH–1H.	0	0	27	0	0	0	8	0	2	0	0	0	0	37
	CLASS 7B—GROUND SUPPORT														
13 C20414	BRIDGE ARMOR VEH LAUNCH SCISSOR TY + CL 60 ALUM 60 FT LG OF SPAN.	0	0	0	0	6	0	0	0	0	0	0	2	0	8
14 C25757	BRIDGE FLOATING + RAFT SECT LIGHT TACTICAL.	0	0	0	0	2	0	0	0	0	0	0	0	0	2
15 C29490	BUCKET CLAMSHELL + 3/4 CU YD.	0	0	0	0	2	0	0	0	0	0	0	0	0	2
16 C30997	BUCKET DRAGLINE + 3/4 CU YD.	0	0	0	0	1	0	0	0	0	0	0	0	0	1

Table 1-6. Summary of Equipment—Type of Infantry Division (With Mobile Assault Bridge)—Continued

1 LIN	2 Nomenclature	3 HHC (7-4H)	4 MP co (19-27H)	5 Cbt avn bn (7-75H)	6 Sig bn (11-35H)	7 Engr bn (5-155H)	8 3 bde HHC (7-42H) (ea)	9 Armd cav sqdn (17-105H)	10 Div arty (6-100H)	11 DISCOM (29-1H)	12 ADA bn (44-325H)	13 Inf bn (mech) (7-45H)	14 Tk bn (17-35H)	15 8 inf bn (7-15H) (ea)	16 Div total (7H)
17 E67735	COMP RCP PWR DRVN + BASE AC 115V-60 CY 1 PH 2.7 CFM 80 PSI.	0	0	0	0	0	0	0	0	1	0	0	0	0	1
18 E69242	COMP RCP PWR DRVN + AIR REC GAS DRVN 15 CFM 175 PSI.	0	0	0	1	1	0	1	5	4	0	1	1	1	22
19 E70064	COMP RCP PWR DRVN + TRK 2 WHL PNEU TIRES GAS DRVN 5 CFM 175 PSI.	1	2	3	3	4	1	5	25	13	5	4	5	1	81
20 E73626	COMP RTY PWR DRVN + AIR WHBRW FR-2 PNU TIRE GAS DRV 60 CFM 6.5 PSI.	0	0	0	0	2	0	0	0	6	0	0	0	0	8
21 F39241	CRANE WHEEL MTD + 5 TON 3/8 CU YD DSL 4×4 ROUGH TERRN AIR TRNSPT.	0	0	0	0	0	0	0	0	4	0	0	0	0	4
22 F39378	CRANE WHEEL MTD + 20 TON 3/4 CU YD ROUGH TERRAIN.	0	0	0	0	3	0	0	0	0	0	0	0	0	3
23 H32869	FAIRLEAD ROLLER AND SHEAVE + 12-1/2T CR-SHVL CRLR 20T CR-SHVL TRK.	0	0	0	0	2	0	0	0	0	0	0	0	0	2
24 H38787	FERRY CONVERSION SET RAFT + INF SPT.	0	0	0	0	2	0	0	0	0	0	0	0	0	2
25 H56391	FIRE FIGHT EQUIP SET + TRK MTD ARMY AIRCRAFT CRASH OS CL 530B.	0	0	2	0	0	0	0	0	0	0	0	0	0	2
26 J35561	GEN ST DSL ENG TM + 45KW 60CY 3PH AC 120/208 240/416V PU-407/M.	0	0	0	2	0	0	0	0	0	0	0	0	0	2
27 J35698	GEN ST DSL ENG TRK MTD + 45KW 60CY 3PH AC 120/208 240/416V PU408M.	0	0	0	2	0	0	0	0	0	0	0	0	0	2
28 J35835	GEN ST DSL ENG + 15KW 60CY 3PH AC 120/208 240/416V SKID.	2	0	0	0	0	0	0	0	1	0	0	0	0	3

29	J36109	GEN ST DSL ENG + 30KW 60CY 3PH AC 120/208 240/416V 50CY SKID.	0	0	0	0	0	0	0	0	4	0	0	0	0	4
30	J41041	GENERATOR SET GASOLINE ENGINE TRAILER MTD + PU-253/U.	0	0	1	0	0	0	0	0	0	0	0	0	0	1
31	J41452	GENERATOR SET GASOLINE ENGINE TRAILER MTD + PU-304 MPQ-4A.	0	0	0	0	0	0	0	3	0	0	0	0	0	3
32	J41589	GENERATOR SET GASOLINE ENGINE TRAILER MTD + PU-322/G.	0	0	2	6	0	0	0	1	0	0	0	0	0	9
33	J42685	GEN ST GAS ENG + 0.3 KW AC 115V 1PH 400CY DC 24 TO 35V.	0	0	0	0	0	0	6 (2)	0	0	0	4 (6)	3 (3)	4 (4)	45 (43)
34	J43233	GEN ST GAS ENG + 0.5 KW 2 WIRE DC 28V SHK.	0	7	0	0	0	0	0	0	0	0	0	0	0	7
35	J43918	GEN ST GAS ENG + 1.5 KW 60CY 1PH 2 WIRE AC 120V SHOCK.	3	2	8	2	5	4	8	29	51 (1)	9	5	8	4	174 (1)
36	J44055	GEN ST GAS ENG + 1.5 KW DC 28V SHOCK.	0	0	2	0	8	1	6	19	27	22 (3)	2	1	2	106 (3)
37	J45699	GEN ST GAS ENG + 3KW 60CY 1-3PH 120/240V 120/208V SKID SHOCK.	0	0	0	0	12	3	1	2	3	0	0	1	0	28
38	J47068	GEN ST GAS ENG + 5KW 60CY 1-3PH AC 120/240 120/208V SKD-SHK MTD.	3	0	3	0	1	0	0	0	8	0	1	0	1	24
39	J49055	GEN ST GAS ENG + 7.5 KW DC 28.5 V WHL MTD.	0	0	0	0	0	0	0	0	1	0	0	0	0	1
40	J74852	GRADER ROAD MOTORIZED + DSL DRVN—HVY 6×4 FRONT-WHL STEER.	0	0	0	0	4	0	0	0	0	0	0	0	0	4
41	L01326	ION EXCHANGE UNIT WATER PURIFICATION TRUCK MTD + 3000GPH MAX FLOW.	0	0	0	0	1	0	0	0	0	0	0	0	0	1
42	L43664	LAUNCH M60 SERIES TANK CHASS TRNSPTG + 40 AND 60 FT BRDGE TY CL 60.	0	0	0	0	4	0	0	0	0	0	0	2	0	6

Table 1–6. Summary of Equipment—Type of Infantry Division (With Mobile Assault Bridge)—Continued

1 LIN	2 Nomenclature	3 HHC (7–4H)	4 MP co (19–27H)	5 Cbt avn bn (7–75H)	6 Sig bn (11–35H)	7 Engr bn (5–155H)	8 3 bde HHC (7–42H) (ea)	9 Armd cav sqdn (17–105H)	10 Div arty (6–100H)	11 DISCOM (29–1H)	12 ADA bn (44–825H)	13 Inf bn (mech) (7–45H)	14 Tk bn (17–35H)	15 3 inf bn (7–15H) (ea)	16 Div total (7H)
43 P11866	PNEUMATIC TOOL AND COMPRESSOR OUTFIT + 250 CFM TRLR MTD.	0	0	0	0	4	0	0	0	0	0	0	0	0	4
44 P91756	PUMP CENTRF + GAS DRVN FRAME MTD—1-1/2 IN 650 GPM 50 FT HD.	0	0	0	0	4	0	0	0	0	0	0	0	0	4
45 P92030	PUMP CENTRF + GAS DRVN FRAME MTD—2 IN 125 GPM 50 FT HD.	0	0	0	0	5	0	0	0	0	0	0	0	0	5
46 P96640	PUMPING ASSEMBLY FLAMMABLE LIQUID BULK TRANSFER +.	0	0	8	0	0	1	2	1	8	0	0	0	0	22
47 V09730	TAGLINE CRANE AND CRANE-SHOVEL + 3/4 TO 1 CU YD BUCKET.	0	0	0	0	2	0	0	0	0	0	0	0	0	2
48 W76816	TRACTOR FULL TRCKD LOW SPD + DSL—MED DBP W/BULDOZ W/ SCARIF WINCH.	0	0	0	0	9	0	0	0	0	0	0	0	0	9
49 X48914	TRUCK LIFT FORK + DSL DRVN 6000 LB CAP ROUGH TERRAIN.	0	0	0	0	1	0	0	0	5	0	0	0	0	6
50 Y35486	WATER PURIF EQUIP SET + TRK MTD DIATOMITE FILTER 1500 GPH (ARMY).	0	0	0	0	5	0	0	0	0	0	0	0	0	5
	CLASS 7G—ELECTRONICS														
51 Q15414	RADAR SET + AN/MPQ–4 LESS POWER.	0	0	0	0	0	0	0	3	0	0	0	0	0	3
52 Q16109	RADAR SET + AN/PPS–5 LESS POWER.	0	0	0	0	0	0	6 (2)	0	0	0	4 (6)	3 (3)	4 (4)	45 (43)
53 Q17332	RADAR SET + AN/TPS–25 LESS POWER.	0	0	0	0	0	0	0	1	0	0	0	0	0	1
54 Q32756	RADIO SET AN/GRC–106..	1	0	0	0	0	1	6	1	0	5 (25)	0	0	0	16 (25)
55 Q34308	RADIO SET AN/GRC–160..	0	0	0	0	38	0	29	45	0	0	47	12 (3)	34	443 (3)

56	Q38299	RADIO SET + AN/PRC-77	3	0	0	7	15	4 (1)	18	29	0	0	34 (6)	3	44 (4)	473 (41)
57	Q42092	RADIO SET + AN/URC-10	0	0	37	0	0	4	26	11	2	0	0	0	0	89
58	Q45779	RADIO SET AN/VRC-12	3	0	0	0	0	0	23	0	0	0	3	10	0	38
59	Q50421	RADIO SET AN/VRC-24	0	0	2	0	0	0	0	0	0	0	0	0	0	2
60	Q53001	RADIO SET AN/VRC-46	8	40	5	21	21	10	33 (5)	128	24	19 (8)	18	25 (1)	15	492 (14)
61	Q54154	RADIO SET AN/VRC-47	0	1	8	10	14	3	19	31	25	25 (15)	20	15	17	313 (15)
62	Q55114	RADIO SET AN/VRC-49	0	4	1	6	1	1	1	19	0	1 (9)	1	1	1	46 (9)
63	Q55510	RADIO SET AN/VRC-53	0	1	0	0	0	0	0	0	0	0	0	0	0	1
64	Q56783	RADIO SET AN/VRC-64	0	0	2	0	23	0	45	5	1	0	55	82	8	277
65	Q90120	RADIO TELETYPEWRITER SET + AN/GRC-142 LESS POWER.	0	0	1	22	2	1	0	15	0	2	0	0	1	53
66	Q92893	RADIO TERMINAL SET AN/TRC-145.	0	0	0	21	0	0	0	0	0	0	0	0	0	21
67	R78061	REPEATER SET RADIO AN/TRC-113.	0	0	0	19	0	0	0	0	0	0	0	0	0	19
68	U81707	SWITCHBOARD TELEPHONE MANUAL + SB-22/PT.	0	1	3	7	6	2	5	36	7	16	7	3	7	153
69	U82255	SWITCHBOARD TELEPHONE MANUAL + SB-86/P.	0	0	0	0	0	0	0	2	0	1	0	0	1	11
70	U82529	SWITCHBOARD TELEPHONE MANUAL + SB-993/GT.	0	0	0	0	9	0	0	27	11	0	6	4	9	129
71	V30252	TELEPHONE SET + TA-1/PT.	0	0	0	0	40	0 (4)	28	26	10	40	75	30	85	929 (12)
72	V30937	TELEPHONE SET + TA-264/PT.	0	0	1	0	0	2	2	7	5	0	0	0	0	21
73	V31211	TELEPHONE SET + TA-312/PT.	1	11	27	279	50	25 (2)	36 (2)	589	147 (4)	196 (29)	53 (6)	28 (3)	43 (41)	1835 (82)
74	V41968	TELETYPEWRITER SET + AN/GGC-3.	1	0	0	0	0	1	0	0	0	1	0	0	0	5
75	V42105	TELETYPEWRITER SET + AN/PGC-1.	1	0	1	0	0	1	0	2	0	1	0	0	0	8
		CLASS 7K—TACTICAL VEHICLES														
76	D11401	CARRIER COMMAND AND RECONNAISSANCE + ARMORED.	0	0	0	0	0	0	50	0	0	0	15	9	0	74
77	D11538	CARRIER COMMAND POST + LIGHT TRACKED.	0	0	0	0	0	0	6	2	0	0	7	7	0	22
78	D12086	CARRIER PERSONNEL FULL TRACKED + ARMORED.	0	0	0	0	0	0	24 (2)	0	0	8	47	10	0	89 (2)

Table 1–6. Summary of Equipment—Type of Infantry Division (With Mobile Assault Bridge)—Continued

1 LIN	2 Nomenclature	3 HHC (7–4H)	4 MP co (19–27H)	5 Cbt avn bn (7–75H)	6 Sig bn (11–35H)	7 Engr bn (5–155H)	8 3 bde HHC (7–42H) (ea)	9 Armd cav sqdn (17–105H)	10 Div arty (6–100H)	11 DISCOM (29–1H)	12 ADA bn (44–325H)	13 Inf bn (mech) (7–45H)	14 Tk bn (17–35H)	15 8 inf bn (7–15H) (ea)	16 Div total (7H)
79 E02670	CHASSIS TRAILER + GENERAL PURPOSE 3-1/2 TON 2 WHEEL W/E.	0	0	0	0	0	0	0	0	4 (2)	0	0	0	0	4 (2)
80 E02807	CHASSIS TRAILER + GENERATOR 2-1/2 TON 2 WHEEL W/E.	0	0	0	0	0	0	0	0	5	0 (6)	0	0	0	5 (6)
81 K90188	INSTRUMENT REPAIR SHOP TRUCK MOUNTED + 2-1/2 TON 6×6 W/E.	0	0	0	0	0	0	0	0	12	0	0	0	0	12
82 S70243	SEMITRAILER LOW BED + WRECKER 12-TON 4 WHEEL 40 FT W/E.	0	0	0	0	0	0	0	0	1	0	0	0	0	1
83 S70517	SEMITRAILER LOW BED + 25 TON 4 WHEEL W/E.	0	0	0	0	12	0	0	0	0	0	0	0	0	12
84 S72024	SEMITRAILER STAKE + 12 TON 4 WHEEL W/E.	0	0	0	0	0	0	0	0	38	0	0	0	0	38
85 S72983	SEMITRAILER TANK + FUEL SERVICING 5000 GALLON 12 TON 4 WHEEL W/E.	0	0	0	0	0	0	0	0	18	0	0	0	0	18
86 S73394	SEMITRAILER TANK TRANSPORTER + 50 TON 8 WHEEL W/E.	0	0	0	0	0	0	0	0	2	0	0	0	0	2
87 S74079	SEMITRAILER VAN + CARGO 12 TON 4-WHEEL W/E.	0	0	0	0	0	0	0	0	9	0	0	0	0	9
88 S74490	SEMITRAILER VAN + EXPANSIBLE 6 TON 4 WHEEL W/E.	0	0	0	0	0	0	0	0	9 (3)	0	0	0	0	9 (3)
89 W94030	TRAILER AMMUNITION + 1-1/2 TON 2-WHEEL W/E.	0	0	0	0	0	0	2	100	0	0	0	0	0	102
90 W94441	TRAILER BASIC UTILITY + 2-1/2 TON 2 SINGLE WHEELS W/E.	0	0	0	0	2	0	0	0	0	0	0	0	0	2
91 W95263	TRAILER CABLE REEL + 3-1/2 TON 2-WHEEL W/E.	0	0	0	0	2	0	0	0	0	0	0	0	0	2

92	W95400	TRAILER CARGO + 1/4 TON 2 WHEEL W/E.	26	45 (1)	8	21	26	18 (1)	15	90	77 (1)	28 (17)	42 (6)	14 (3)	50 (4)	845 (63)
93	W95537	TRAILER CARGO + 3/4 TON 2 WHEEL W/E.	3	6	18	24	18	6	6	116	50 (14)	34 (26)	11	5	30	549 (40)
94	W95811	TRAILER CARGO + 1-1/2 TON 2 WHEEL W/E.	12	2	23	18	39	6	22	70	200 (10)	36	20	24	19	636 (10)
95	W98825	TRAILER TANK + WATER 400 GALLON 1-1/2 TON 2 WHEEL W/E.	1	1	2	3	5	1	5	26	19	5	5	5	5	120
96	X38639	TRUCK AMBULANCE + 1/4 TON 4×4 W/E.	0	0	0	0	1	0	3	0	0	0	3	3	6	58
97	X38776	TRUCK AMBULANCE + 3/4 TON 4×4 W/E.	2	0	1	0	0	0	0	6	32 (4)	1	0	0	0	42 (4)
98	X39735	TRUCK CARGO + 3/4 TON 4×4 W/E.	4	6	18	122	30	7	10	139	56 (15)	40 (15)	5	4	29	687 (30)
99	X39872	TRUCK CARGO + 3/4 TON 4×4 W/WINCH W/E.	0	0	5	0	0	1	0	53	4	0	6	6	2	93
100	X40009	TRUCK CARGO +2-1/2 TON 6×6 W/E.	4	1	6	24	21	3	12	72	174 (10)	33	10	7	10	453 (10)
101	X40146	TRUCK CARGO +2-1/2 TON 6×6 W/WINCH W/E.	3	2	11	19	19	1	14	167	34 (1)	11	5	16	11	392 (1)
102	X40283	TRUCK CARGO + 2-1/2 TON 6×6 XLWB W/E.	0	0	0	0	0	0	0	2	0	2 (3)	0	0	0	4 (3)
103	X40831	TRUCK CARGO + 5 TON 6×6 LWB W/E.	0	0	0	0	6	0	11	0	0	6	6	13	0	42
104	X40968	TRUCK CARGO + 5 TON 6×6 LWB W/WINCH W/E.	0	0	0	0	0	0	9	53	0	0	8	7	2	93
105	X43845	TRUCK DUMP + 5 TON 6×6 W/WINCH W/E.	0	0	0	0	45	0	0	0	0	0	0	0	0	45
106	X57271	TRUCK TANK + FUEL SERVICING 2-1/2 TON 6X6 W/E.	0	0	10	0	0	1	4	1	2	0	0	1	0	21
107	X57408	TRUCK TANK + FUEL SERVICING 2-1/2 TON 6×6 W/WINCH W/E.	0	0	0	2	0	0	0	0	0	0	0	0	0	2
108	X59052	TRUCK TRACTOR + 2-1/2 TON 6×6 W/E.	0	0	0	0	0	0	0	0	2	0	0	0	0	2
109	X59189	TRUCK TRACTOR + 2-1/2 TON 6×6 W/WINCH W/E.	0	0	0	0	0	0	0	0	1	0	0	0	0	1
110	X59326	TRUCK TRACTOR + 5 TON 6×6 W/E.	0	0	0	0	1	0	0	0	79	0	0	0	0	80
111	X59463	TRUCK TRACTOR + 5 TON 6×6 W/WINCH W/E.	0	0	0	0	0	0	0	0	1	0	0	0	0	1

Table 1-6. Summary of Equipment—Type of Infantry Division (With Mobile Assault Bridge)—Continued

1 LIN	2 Nomenclature	3 HHC (7-4H)	4 MP co (19-27H)	5 Cbt avn bn (7-75H)	6 Sig bn (11-35H)	7 Engr bn (5-155H)	8 3 bde HHC (7-42H) (ea)	9 Armd cav sqdn (17-105H)	10 Div arty (6-100H)	11 DISCOM (29-1H)	12 ADA bn (44-325H)	13 Inf bn (mech) (7-45H)	14 Tk bn (17-35H)	15 8 inf bn (7-15H) (ea)	16 Div total (7H)
112 X59600	TRUCK TRACTOR + 10 TON 6×6 W/DUAL MIDSHIP WN W/HI MTD 5TH WHL W/E.	0	0	0	0	0	0	0	0	2	0	0	0	0	2
113 X59874	TRUCK TRACTOR + 10 TON 6×6 W/MIDSHIP WINCH W/LOW MTD 5TH WHL W/E.	0	0	0	0	12	0	0	0	0	0	0	0	0	12
114 X60696	TRUCK TRACTOR WRECKER + 5 TON 6×6 W/WINCH W/E.	0	0	0	0	0	0	0	0	1	0	0	0	0	1
115 X60833	TRUCK UTILITY + 1/4 TON 4×4 W/E.	31	45 (1)	9	31	26	21 (1)	32	169	89 (1)	30 (17)	34 (6)	37 (3)	48 (2)	978 (63)
116 X61244	TRUCK UTILITY + 1/4 TON 4×4 CARRIER FOR 106 MM RIFLE W/E.	0	0	0	0	0	0	0	0	0	0	8	0	8	72
117 X62340	TRUCK VAN + SHOP 2-1/2 TON 6×6 W/E.	4	0	4	0	1	2	1	14	38 (2)	1 (3)	2	0	1	79 (5)
118 X62477	TRUCK VAN + SHOP 2-1/2 TON 6×6 W/ WINCH W/E.	0	0	0	0	0	0	0	3	1	4	0	0	0	8
119 X63299	TRUCK WRECKER + 5 TON 6×6 W/WINCH W/E.	0	0	1	1	1	1	3	9	11	5	1	3	1	46
	CLASS 7L—MISSILES														
120 J95533	GUIDED MISSILE SYSTEM INTERCEPT—CARRIER MTD, (CHAPARRAL).	0	0	0	0	0	0	0	0	0	24	0	0	0	24
121 K27486	HEATING AND TIE-DOWN UNIT 762MM ROCKET TRK MTD + W/E (HONEST JN).	0	0	0	0	0	0	0	8	0	0	0	0	0	8
122 L45534	LAUNCHER ROCKET + 762MM TRUCK MOUNTED W/E (HONEST JOHN).	0	0	0	0	0	0	0	4	0	0	0	0	0	4

		CLASS 7M—WEAPONS															
123	A89819	ARMAMENT POD AIRCRAFT 7.62 MILLIMETER MACHINE GUN + W/E.	0	0	12	0	0	0	10	0	0	0	0	0	0	0	22
124	A90117	ARMAMENT SUBSYSTEM HELICOPTER 7.62 MILLIMETER MACHINE GUN + LIGHT.	0	0	13 (12)	0	0	0	6	0	0	0	0	0	0	0	19 (12)
125	A90122	ARMAMENT SUBSYSTEM HELICOPTER 7.62 MM MACHINE GUN + DOOR MTD L W.	0	0	0	0	0	0	2	0	0	0	0	0	0	0	2
126	A90154	ARMAMENT SUBSYSTEM HELICOPTER 7.62 MM MACHINE GUN + HIGH RATE.	0	0	0	0	0	0	9	0	0	0	0	0	0	0	9
127	A90436	ARMAMENT SUBSYS HEL 7.62MM MG—40 MM GRENADE LNCHR + HIGH RATE.	0	0	6	0	0	0	9	0	0	0	0	0	0	0	15
128	A93124	ARMORED RECONNAISSANCE AIRBORNE ASSAULT VEHICLE +.	0	0	0	0	0	0	27	0	0	0	0	0	0	0	27
129	E56577	COMBAT ENGINEER VEHICLE FULL TRACKED +.	0	0	0	0	3	0	0	0	0	0	0	0	0	0	3
130	G02204	DETECTING SET MINE + PTBL METALLIC AND NON METALLIC.	0	4	0	7	48	0	10	25	2	5	1	5	2	123	
131	G02341	DETECTING SET MINE + PTBL METALLIC.	0	4	0	13	39	0	10	25	2	5	3	5	7	162	
132	J96694	GUN ANTIAIRCRAFT ARTILLERY SELF-PROPELLED + 20MM.	0	0	0	0	0	0	0	0	0	24	0	0	0	24	
133	K56981	HOWITZER HEAVY SELF PROPELLED + 8 INCH.	0	0	0	0	0	0	0	4	0	0	0	0	0	4	
134	K57529	HOWITZER TOWED + 105 MILLIMETER.	0	0	0	0	0	0	0	54	0	0	0	0	0	54	
135	K57803	HOWITZER MEDIUM TOWED + 155 MILLIMETER.	0	0	0	0	0	0	0	18	0	0	0	0	0	18	
136	L44595	LAUNCHER GRENADE + 40 MILLIMETER.	0	0	0	0	0	0	0	0	0	30	54	0	0	54	
137	L91975	MACHINE GUN CALIBER .50 + HB FLEXIBLE FOR GROUND USE.	2	0	0	0	3	3	32	0	0 (4)	0	46	24	14	228 (4)	

Table 1-6. Summary of Equipment—Type of Infantry Division(With Mobile Assault Bridge)—Continued

1 LIN		2 Nomenclature	3 HHC (7-4H)	4 MP co (19-27H)	5 Cbt avn bn (7-75H)	6 Sig bn (11-35H)	7 Engr bn (5-155H)	8 3 bde HHC (7-42H) (ea)	9 Armd cav sqdn (17-105H)	10 Div arty (6-100H)	11 DISCOM (29-1H)	12 ADA bn (44-325H)	13 Inf bn (mech) (7-45H)	14 Tk bn (17-35H)	15 3 inf bn (7-15H) (ea)	16 Div total (7H)
138	L92386	MACHINE GUN 7.62 MILLIMETER + LIGHT FLEXIBLE.	0	9	6	10	21	0 (5)	13	163	66 (1)	20	49	4	25	561 (16)
139	M68008	MORTAR 81 MILLIMETER + ON MOUNT.	0	0	0	0	0	0	0	0	0	0	9	0	9	81
140	M68282	MORTAR 4.2 INCH + ON MOUNT.	0	0	0	0	0	0	9	0	0	0	4	4	4	49
141	M75577	MOUNT TRIPOD MACHINE GUN + HEAVY-CALIBER 50.	2	0	0	0	3	3	32	0	0 (4)	0	26	24	14	208 (4)
142	M75714	MOUNT TRIPOD MACHINE GUN + 7.62 MILLIMETER.	0	5	6	10	21	0 (5)	13	163	66 (1)	20	49	4	25	557 (16)
143	N96741	PISTOL CALIBER .45 AUTOMATIC +.	32	149	0	24	45 (3)	9 (10)	178 (2)	100	88	25	174	280	156	2370 (35)
144	R50543	RECOVERY VEHICLE FULL TRACKED + LIGHT ARMORED.	0	0	0	0	0	0	5	1	0	5	6	1	0	18
145	R50680	RECOVERY VEHICLE FULL TRACKED + MEDIUM.	0	0	0	0	1	0	0	0	4	0	0	5	0	10
146	R91107	REVOLVER CALIBER .38 + 2 INCH BARREL.	0	2	0	0	0	0	0	0	0	0	0	0	0	2
147	R91244	REVOLVER CALIBER .38 + 4 INCH BARREL.	0	0	126 (24)	0	0	4	62 (15)	18	15	0	0	0	0	233 (39)
148	R94977	RIFLE 5.56 MILLIMETER + W/E.	149 (2)	186 (1)	204 (15)	636 (9)	735 (78)	85 (40)	637 (32)	2543 (109)	2125 (248)	532 (121)	717 (73)	284 (38)	662 (32)	14296 (1102)
149	R96484	RIFLE RECOILLESS 90 MILLIMETER +.	0	9	0	0	0	0 (2)	0	0	0	0	18	0	18	171 (6)
150	R96758	RIFLE RECOILLESS 106 MILLIMETER + ON MOUNT.	0	0	0	0	0	0	0	0	0	0	8	0	8	72
151	U56346	SUBMACHINE GUN CALIBER .45 +.	0	0	0	0	0	0	38	0	0	0	12	120	0	170
152	V13100	TANK COMBAT FULL TRACKED + 105MM GUN.	0	0	0	0	0	0	0	0	0	0	0	54	0	54
		CLASS 7N—SPECIAL WEAPONS														
153	H68063	FLAMETHROWER PORTABLE +.	0	0	0	0	0	0	0	0	0	0	9	0	9	81

		CLASS 7Q—GENERAL EQUIPMENT														
154	B83856	BOAT LANDING INFLATABLE + ASSAULT CRAFT NYLON CLOTH 15-MAN.	0	0	0	0	18	0	0	0	0	0	0	0	0	18
155	B84404	BOAT RECONNAISSANCE + PNEUMATIC 3-MAN.	0	0	0	0	28	0	0	0	0	0	0	0	0	28
156	J04716	FUEL SYSTEM SUPPLY POINT + PORTABLE 6000 GAL CAP.	0	0	0	0	0	0	0	0	1	0	0	0	0	1
157	L85420	LUBRICAT-SERV UNIT PWR OPER + TRLR MTD 15CF AIR COMP GAS DRVN WZD.	0	0	0	0	1	0	0	0	0	0	0	0	0	1
158	T10138	SHOP EQUIP CONTACT MAINT TRK MTD +.	0	0	0	0	2	0	0	0	1	0	0	0	0	3
159	T10275	SHOP EQUIP ELEC REP SEMITRLR MTD + ARMY.	0	0	0	0	0	0	0	0	1	0	0	0	0	1
160	T13152	SHOP EQUIP ORGANZL REP LIGHT TRK MTD +.	0	0	0	0	1	0	0	0	0	0	0	0	0	1
161	V12141	TANK AND PUMP UNIT LIQUID DISPENSING TRUCKMOUNTING +.	0	0	0	0	6	0	5	7	10	9	4	5	2	62
162	V19950	TANK UNIT LIQUID DISPENSING TRAILER MOUNTING +.	0	0	0	0	6	0	0	2	8	5	4	5	2	46

Table 1–7. Summary of Equipment—Type of Infantry Division (Mechanized) (With Mobile Assault Bridge)

1	2	3	4	5	6	7	8	9	10	11	12	13	14	15
LIN	Nomenclature	HHC (37–4H)	MP co (19–27H)	Div avn co (37–87H)	Sig bn (11–35H)	Engr bn (5–145H)	3 bde HHC (37–42H) (ea)	Armd cav sqdn (17–105H)	Div arty (6–300H)	DISCOM (29–11H)	ADA bn (44–325H)	6 inf bn (mecb) (7–45H) (ea)	4 tk bn (17–35H) (ea)	Div total (37H)
	CLASS 2Q—GENERAL EQUIPMENT													
1 Z13157	CARD PUNCH MACHINE + ADPE	0	0	0	0	0	0	0	0	9	0	0	0	9
2 Z15494	COLLATOR + ADPE	0	0	0	0	0	0	0	0	2	0	0	0	2

Table 1-7. Summary of Equipment—Type of Infantry Division (Mechanized) (With Mobile Assault Fridge)—Continued

1	2	3	4	5	6	7	8	9	10	11	12	13	14	15
LIN	Nomenclature	HHC (37-4H)	MP co (19-27H)	Div avn co (37-87H)	Sig bn (11-35H)	Engr bn (5-145H)	3 bde HHC (37-42H) (ea)	Armd cav sqdn (17-105H)	Div arty (6-300H)	DISCOM (29-11H)	ADA bn (44-325H)	6 inf bn (mech) (7-45H) (ea)	4 tk bn (17-35H) (ea)	Div totrl (37H)
3 Z20571	DATA TRANSCEIVER CARD UNIT+ADPE.	0	0	0	0	0	0	0	0	4	0	0	0	4
4 Z20669	DATA TRANSMISSION EQUIPMENT+ ADPE.	0	0	0	0	0	0	0	0	1	0	0	0	1
5 Z25208	ELECTRONIC COMPUTER+ ADPE.	0	0	0	0	0	0	0	0	2	0	0	0	2
6 Z35210	INTERPRETER+ ADPE	0	0	0	0	0	0	0	0	2	0	0	0	2
7 Z74660	SORTER+ ADPE	0	0	0	0	0	0	0	0	3	0	0	0	3
8 Z95673	VERIFIER+ ADPE	0	0	0	0	0	0	0	0	7	0	0	0	7
	CLASS 7A—AIR													
9 K29660	HELICOPTER ATTACK+ AH-1G	0	0	0	0	0	0	9	0	0	0	0	0	9
10 K30645	HELICOPTER OBSERVATION+ OH-6A.	0	0	6	0	0	4	9	9	0	0	0	0	36
11 K31749	HELICOPTER UTILITY+ UH-1B	0	0	0	0	0	0	0	2	0	0	0	0	2
12 K31795	HELICOPTER UTILITY, UH-1H	0	0	4	0	0	0	8	0	2	0	0	0	14
	CLASS 7B—GROUND SUPPORT													
13 C20414	BRIDGE ARMOR VEH LAUNCH SCISSOR—TY+ CL 60 ALUM 60 FT LG OF SPAN.	0	0	0	0	6	0	0	0	0	0	0	2	14
14 C25757	BRIDGE FLOATING+ RAFT SECT LIGHT TACTICAL.	0	0	0	0	2	0	0	0	0	0	0	0	2
15 C29490	BUCKET CLAMSHELL+ 3/4 CU YD.	0	0	0	0	2	0	0	0	0	0	0	0	2
16 C30997	BUCKET DRAGLINE+ 3/4 CU YD.	0	0	0	0	1	0	0	0	0	0	0	0	1
17 E67735	COMP RCP PWR DRVN+ BASE AC 115V 60 CY 1 PH 2.7 CFM 80 PSI.	0	0	0	0	0	0	0	0	1	0	0	0	1
18 E69242	COMP RCP PWR DRVN+ AIR REC GAS DRVN 15 CFM 175 PSI.	0	0	0	1	1	1	1	5	4	0	1	1	25
19 E70064	COMP RCP PWR DRVN+ TRK 2 WHL PNEU TIRES GAS DRVN 5 CFM 175 PSI.	1	2	1	3	5	0	5	24	14	5	4	5	104
20 E73626	COMP RTY PWR DRVN+ AIR WHBRW FR 2 PNU TIRE GAS DRV 60 CFM 6.5 PSI.	0	0	0	0	2	0	0	0	6	0	0	0	8

21	F39241	CRANE WHEEL MTD + 5 TON 3/8 CU YD DSL 4×4 ROUGH TERRN AIR TRNSPT.	0	0	0	0	0	0	0	0	4	0	0	0	4
22	F39378	CRANE WHEEL MTD + 20 TON 3/4 CU YD ROUGH TERRAIN.	0	0	0	0	3	0	0	0	0	0	0	0	3
23	H32869	FAIRLEAD ROLLER AND SHEAVE + 12-1/2 CR-SHVL CRLR 20T CR-SHVL TRK.	0	0	0	0	2	0	0	0	0	0	0	0	2
24	H38787	FERRY CONVERSION SET RAFT + INF SPT.	0	0	0	0	2	0	0	0	0	0	0	0	2
25	H56391	FIRE FIGHT EQUIP SET + TRK MTD ARMY AIRCRAFT CRASH OS CL 530B.	0	0	1	0	0	0	0	0	0	0	0	0	1
26	J35561	GEN ST DSL ENG TM + 45KW 60CY 3PH AC 120/208 240/416V PU-407/M.	0	0	0	2	0	0	0	0	0	0	0	0	2
27	J35698	GEN ST DSL ENG TRK MTD + 45KW 60CY 3PH AC 120/208 240/416V PU408M.	0	0	0	2	0	0	0	0	0	0	0	0	2
28	J35835	GEN ST DSL ENG + 15KW 60CY 3PH AC 120/208 240/416V SKID.	2	0	0	0	0	0	0	0	1	0	0	0	3
29	J36109	GEN ST DSL ENG + 30KW 60CY 3PH AC 120/208 240/416V 50CY SKID.	0	0	0	0	0	0	0	0	3	0	0	0	3
30	J41041	GENERATOR SET GASOLINE ENGINE TRAILER MTD + PU-253/U.	0	0	1	0	0	0	0	0	0	0	0	0	1
31	J41452	GENERATOR SET GASOLINE ENGINE TRAILER MTD + PU-304 MPQ-4A.	0	0	0	0	0	0	0	3	0	0	0	0	3
32	J41589	GENERATOR SET GASOLINE ENGINE TRAILER MTD + PU-322/G.	0	0	2	6	0	0	0	1	0	0	0	0	9
33	J42685	GEN ST GAS ENG + 0.3 KW AC 115V 1PH 400CY DC 24 TO 35V.	0	0	0	0	0	0	6 (2)	0	0	0	4 (6)	3 (3)	42 (50)
34	J43233	GEN ST GAS ENG + 0.5KW 2 WIRE DC 28V SHK.	0	7	0	0	0	0	0	0	0	0	0	0	7
35	J43918	GEN ST GAS ENG + 1.5KW 60CY 1PH 2 WIRE AC 120V SHOCK.	3	2	3	2	6	4	8	32	50 (1)	9	5	8	189 (1)
36	J44055	GEN ST GAS ENG + 1.5KW DC 28V SHOCK.	0	0	1	0	9	2	6	7	27	22 (3)	2	1	94 (3)
37	J45699	GEN ST GAS ENG + 3KW 60CY 1-3PH 120/240V 120/208V SKID SHOCK.	0	0	1	0	16	4	1	2	3	0	0	1	39
38	J47068	GEN ST GAS ENG + 5KW 60CY 1-3PH AC 120/240 120/208V SKD-SHK MTD.	3	0	0	0	0	0	0	0	8	0	1	0	17
39	J49055	GEN ST GAS ENG + 7.5 KW DC 28.5V WHL MTD.	0	0	0	0	0	0	0	0	1	0	0	0	1

Table 1-7. Summary of Equipment—Type of Infantry Division (Mechanized) (With Mobile Assault Bridge)—Continued

1 LIN	2 Nomenclature	3 HHC (37-4H)	4 MP co (19-27H)	5 Div avn co (37-87H)	6 Sig bn (11-35H)	7 Engr bn (5-145H)	8 3 bde HHC (37-42H) (ea)	9 Armd cav sqdn (17-105H)	10 Div arty (6-300H)	11 DISCOM (29-11H)	12 ADA bn (44-325H)	13 6 inf bn (mech) (7-45H) (ea)	14 4 tk bn (17-35H) (ea)	15 Div total (37H)
40 J74852	GRADER ROAD MOTORIZED + DSL DRVN—HVY 6×4 FRONT-WHL STEER:	0	0	0	0	4	0	0	0	0	0	0	0	4
41 L01326	ION EXCHANGE UNIT WATER PURIFICATION TRUCK MTD + 3000GPH MAX FLOW.	0	0	0	0	1	0	0	0	0	0	0	0	1
42 L43664	LAUNCH M60 SERIES TANK CHASS TRNSPTG + 40 AND 60 FT BRDGE TY CL60.	0	0	0	0	4	0	0	0	0	0	0	2	12
43 P11866	PNEUMATIC TOOL AND COMPRESSOR OUTFIT + 250 CFM TRLR MTD.	0	0	0	0	5	0	0	0	0	0	0	0	5
44 P91756	PUMP CENTRF + GAS DRVN FRAME MTD 1-1/2 IN 65GPM 50 FT HD.	0	0	0	0	4	0	0	0	0	0	0	0	4
45 P92030	PUMP CENTRF + GAS DRVN FRAME MTD 2 IN 125 GPM 50 FT HD.	0	0	0	0	5	0	0	0	0	0	0	0	5
46 P96640	PUMPING ASSEMBLY FLAM MABLE LIQUID BULK TRANSFER +.	0	0	0	0	0	1	2	1	8	0	0	0	14
47 V09730	TAGLINE CRANE AND CRANE-SHOVEL + 3/4 TO 1 CU YD BUCKET.	0	0	0	0	2	0	0	0	0	0	0	0	2
48 W76816	TRACTOR FULL TRCKD LOW SPD + DSL MED DBP W/ BULDOZ W/SCARIF WINCH.	0	0	0	0	7	0	0	0	0	0	0	0	7
49 X48914	TRUCK LIFT FORK + DSL DRVN 6000 LB CAP ROUGH TERRAIN	0	0	0	0	1	0	0	0	5	0	0	0	6
50 Y35486	WATER PURIF EQUIP SET + TRK MTD DIATOMITE FILTER 1500 GPH (ARMY).	0	0	0	0	5	0	0	0	0	0	0	0	5
	CLASS 7G—ELECTRONICS													
51 Q15414	RADAR SET + AN/MPQ-4 LESS POWER.	0	0	0	0	0	0	0	3	0	0	0	0	3
52 Q16109	RADAR SET + AN/PPS-5 LESS POWER.	0	0	0	0	0	0	6 (2)	0	0	0	4 (6)	3 (3)	42 (50)
53 Q17332	RADAR SET + AN/TPS-25 LESS POWER.	0	0	0	0	0	0	0	1	0	0	0	0	1

54	Q32756	RADIO SET AN/GRC-106	1 (1)	0	0	0	0	1	6	1	0	5 (25)	0	0	16 (26)
55	Q34308	RADIO SET AN/GRC-160	0	0	0	0	47	0	29	53	0	0	47	12 (3)	459 (12)
56	Q38299	RADIO SET + AN/PRC-77	3 (1)	0	0	7	19	2	18	32	0	0	34 (6)	3	301 (37)
57	Q42092	RADIO SET + AN/URC-10	0	0	10	0	0	4	26	11	2	0	0	0	61
58	Q45779	RADIO SET AN/VRC-12	3 (2)	0	0	0	0	0	23	0	0	0	3	10	84 (2)
59	Q53001	RADIO SET AN/VRC-46	8 (1)	40	0	21	24	11	33 (5)	128	24	19 (8)	18	25 (1)	538 (18)
60	Q54154	RADIO SET AN/VRC-47	1	1	2	10	17	5	19	30	25	73 (15)	20	15	325 (15)
61	Q55114	RADIO SET AN/VRC-49	0	4	0	6	1	1	1	19	0	1 (9)	1	1	45 (9)
62	Q55510	RADIO SET AN/VRC-53	0	1	0	0	0	0	0	0	0	0	0	0	1
63	Q56783	RADIO SET AN/VRC-64	0 (4)	0	1	0	28	1	45	9	1	0	55	82	745 (4)
64	Q90120	RADIO TELETYPEWRITER SET + AN/GRC-142 LESS POWER.	0	0	0	22	2	0	0	21	0	2	0	0	47
65	Q92893	RADIO TERMINAL SET AN/TRC-145.	0	0	0	21	0	0	0	0	0	0	0	0	21
66	R78061	REPEATER SET RADIO AN/TRC-113.	0	0	0	19	0	0	0	0	0	0	0	0	19
67	U81707	SWITCHBOARD TELEPHONE MANUAL + SB-22/PT.	0	1	1	7	7	2	5	35	7	16	7	3	139
68	U82255	SWITCHBOARD TELEPHONE MANUAL + SB-86/P.	0	0	0	0	0	0	0	2	0	1	0	0	3
69	U82529	SWITCHBOARD TELEPHONE MANUAL + SB-993/GT.	0	0	0	0	12	0	0	26	11	0	6	4	101
70	V30252	TELEPHONE SET + TA-1/PT	0 (4)	0	0	0	52	0	28	24	10	40	75	30	724 (4)
71	V30937	TELEPHONE SET + TA-264/PT	0	0	1	0	0	0	2	7	5	0	0	0	15
72	V31211	TELEPHONE SET + TA-312/PT	1	11	17	279	59	22	36 (2)	566	147 (4)	191 (29)	53 (6)	28 (3)	1807 (83)
73	V41968	TELETYPEWRITER SET + AN/GGC-3.	1	0	0	0	0	1	0	0	0	1	0	0	5
74	V42105	TELETYPEWRITER SET + AN/PGC-1.	1	0	1	0	0	1	0	2	0	1	0	0	8
		CLASS 7K—TACTICAL VEHICLES													
75	D11401	CARRIER COMMAND AND RECONNAISSANCE + ARMORED.	0 (3)	0	0	0	0	1 (3)	50	0	0	0	15	9	179 (12)
76	D11538	CARRIER COMMAND POST + LIGHT TRACKED.	2	0	0	0	1	5	6	35	0	0	7	7	129
77	D12086	CARRIER PERSONNEL FULL TRACKED + ARMORED.	0	0	0	0	43	0 (4)	24 (2)	0	0	8	47	10	397 (14)
78	E02670	CHASSIS TRAILER + GENERAL PURPOSE 3-1/2 TON 2 WHEEL W/E.	0	0	0	0	0	0	0	0	4 (2)	0	0	0	4 (2)
79	E02807	CHASSIS TRAILER + GENERATOR 2-1/2 TON 2 WHEEL W/E.	0	0	0	0	0	0	0	0	4	0 (6)	0	0	4 (6)
80	K90188	INSTRUMENT REPAIR SHOP TRUCK MOUNTED + 2-1/2 TON 6×6 W/E.	0	0	0	0	0	0	0	0	12	0	0	0	12

Table 1-7. Summary of Equipment—Type of Infantry Division (Mechanized) (With Mobile Assault Bridge)—Continued

1 LIN	2 Nomenclature	3 HHC (37-4H)	4 MP co (19-27H)	5 Div avn co (37-87H)	6 Sig bn (11-35H)	7 Engr bn (5-145H)	8 3 bde HHC (37-42H) (ea)	9 Armd cav sqdn (17-105H)	10 Div arty (6-300H)	11 DISCOM (29-11H)	12 ADA bn (44-325H)	13 6 inf bn (mech) (7-45H) (ea)	14 4 tk bn (17-35H) (ea)	15 Div tota (37H)
81 S70243	SEMITRAILER LCW BED + WRECKER 12 TON 4 WHEEL 40 FT W E.	0	0	0	0	0	0	0	0	1	0	0	0	1
82 S70517	SEMITRAILER LOW BED + 25 TON 4 WHEEL W E.	0	0	0	0	10	0	0	0	0	0	0	0	10
83 S72024	SEMITRAILER STAKE + 12 TON 4 WHEEL W E.	0	0	0	0	0	0	0	0	37	0	0	0	37
84 S72983	SEMITRAILER TANK + FUEL SERVICING 5000 GALLON 12 TON 4 WHEEL W/E.	0	0	0	0	0	0	0	0	25	0	0	0	25
85 S73394	SEMITRAILER TANK TRANSPORTER + 50 TON 8 WHEEL W E.	0	0	0	0	0	0	0	0	6	0	0	0	6
86 S74079	SEMITRAILER VAN + CARGO 12 TON 4 WHEEL W/E.	0	0	0	0	0	0	0	0	9	0	0	0	9
87 S74490	SEMITRAILER VAN + EXPANSIBLE 6 TON 4 WHEEL W/E.	0	0	0	0	0	0	0	0	9 (3)	0	0	0	9 (3)
88 W94030	TRAILER AMMUNITION + 1-1/2 TON 2 WHEEL W/E.	0	0	0	0	0	0	2	103	0	0	0	0	105
89 W94441	TRAILER BASIC UTILITY + 2-1/2 TON 2 SINGLE WHEELS W/E.	0	0	0	0	2	0	0	0	0	0	0	0	2
90 W95263	TRAILER CABLE REEL + 3-1/2 TON 2 WHEEL W/E.	0	0	0	0	2	0	0	0	0	0	0	0	2
91 W95400	TRAILER CARGO + 1/4 TON 2 WHEEL W/E.	27	45 (1)	2	21	28	14	15	86	79 (1)	28 (17)	42 (6)	14 (3)	680 (67)
92 W95537	TRAILER CARGO + 3/4 TON 2 WHEEL W/E.	3	6	5	24	12	6	6	84	52 (14)	34 (26)	11	5	330 (40)
93 W95811	TRAILER CARGO + 1-1/2 TON 2 WHEEL W/E.	6	2	4	18	41	5	22	72	198 (10)	36	20	24	630 (10)
94 W98825	TRAILER TANK + WATER 400 GALLON 1-1/2 TON 2 WHEEL W/E.	1	1	1	3	6	1	5	25	19	5	5	5	119
95 X38639	TRUCK AMBULANCE + 1/4 TON 4×4 W/E.	0	0	0	0	1	0	3	0	0	0	3	3	34
96 X38776	TRUCK AMBULANCE + 3/4 TON 4×4 W/E.	2	0	0	0	0	0	0	6	32 (4)	1	0	0	41 (4)
97 X39735	TRUCK CARGO + 3/4 TON 4×4 W/E.	4	6	9	122	31	8	10	118	56 (15)	40 (15)	5	4	466 (30)
98 X39872	TRUCK CARGO + 3/4 TON 4×4 W/WINCH W/E.	0	0	0	0	0	1	0	58	4	0	6	6	125

99	X40009	TRUCK CARGO + 2-1/2 TON 6×6 W/E.	4	1	3	24	23	4	12	64	173 (10)	33	10	7	437 (10)
100	X40146	TRUCK CARGO + 2-1/2 TON 6×6 W/WINCH W/E.	1	2	5	19	17	1	14	38	34 (1)	11	5	16	238 (1)
101	X40283	TRUCK CARGO + 2-1/2 TON 6×6 XLWB W/E.	0	0	0	0	0	0	0	2	0	2 (3)	0	0	4 (3)
102	X40831	TRUCK CARGO + 5 TON 6×6 LWB W/E.	0	0	0	0	6	0	11	48	0	6	6	13	159
103	X40968	TRUCK CARGO + 5 TON 6×6 LWB W/WINCH W/E.	0	0	0	0	0	0	9	70	0	0	8	7	155
104	X43845	TRUCK DUMP + 5 TON 6×6 W/WINCH W/E.	0	0	0	0	22	0	0	0	0	0	0	0	22
105	X57271	TRUCK TANK + FUEL SERVICING 2-1/2 TON 6×6 W/E.	0	0	4	0	0	1	4	1	2	0	0	1	18
106	X57408	TRUCK TANK + FUEL SERVICING 2-1/2 TON 6×6 W/WINCH W/E.	0	0	0	2	0	0	0	0	0	0	0	0	2
107	X59052	TRUCK TRACTOR + 2-1/2 TON 6×6 W/E.	0	0	0	0	0	0	0	0	2	0	0	0	2
108	X59189	TRUCK TRACTOR + 2-1/2 TON 6×6 W/WINCH W/E.	0	0	0	0	0	0	0	0	1	0	0	0	1
109	X59326	TRUCK TRACTOR + 5 TON 6×6 W/E.	0	0	0	0	1	0	0	0	84	0	0	0	85
110	X59463	TRUCK TRACTOR + 5 TON 6×6 W/WINCH W/E.	0	0	0	0	0	0	0	0	1	0	0	0	1
111	X59600	TRUCK TRACTOR + 10 TON 6×6 W/DUAL MIDSHIP WN W/HI MTD 5TH WHL W/E.	0	0	0	0	0	0	0	0	6	0	0	0	6
112	X59874	TRUCK TRACTOR + 10 TON 6×6 W/MIDSHIP WINCH W/LOW MTD 5TH WHL W/E.	0	0	0	0	10	0	0	0	0	0	0	0	10
113	X60696	TRUCK TRACTOR WRECKER + 5 TON 6X6 W/WINCH W/E.	0	0	0	0	0	0	0	0	1	30	0	0	1
114	X60833	TRUCK UTILITY + 1/4 TON 4×4 W/E.	35	45 (1)	2	31	28	17	32	163	91 (1)	28 (17)	34 (6)	37 (3)	856 (67)
115	X61244	TRUCK UTILITY + 1/4 TON 4×4 CARRIER FOR 106 MM RIFLE W/E.	0	0	0	0	0	0	0	0	0	0	8	0	48
116	X62340	TRUCK VAN + SHOP 2-1/2 TON 6×6 W/E.	4	0	2	0	1	0	1	14	39 (2)	1 (3)	2	0	74 (5)
117	X62477	TRUCK VAN + SHOP 2-1/2 TON 6×6 W/WINCH W/E.	0	0	0	0	0	0	0	3	1	4	0	0	8
118	X63299	TRUCK WRECKER + 5 TON 6×6 W/WINCH W/E.	0	0	0	1	1	0	3	9	11	5	1	3	48
		CLASS 7L—MISSILES													
119	J95533	GUIDED MISSILE SYSTEM INTERCEPT CARRIER MTD, (CHAPARRAL).	0	0	0	0	0	0	0	0	0	24	0	0	24

Table 1-7. Summary of Equipment—Type of Infantry Division (Mechanized) (With Mobile Assault Bridge)—Continued

1 LIN	2 Nomenclature	3 HHC (37-4H)	4 MP co (19-27H)	5 Div avn co (37-37H)	6 Sig bn (11-35H)	7 Engr bn (5-145H)	8 3 bde HHC (37-42H) (ea)	9 Armd cav sqdn (17-105H)	10 Div arty (6-300H)	11 DISCOM (29-11H)	12 ADA bn (44-325H)	13 6 inf bn (mech) (7-45H) (ea)	14 4 tk bn (17-35H) (ea)	15 Div total (37H)
120 K27486	HEATING AND TIE-DOWN UNIT 762MM ROCKET TRK MTD + W/E (HONEST JN).	0	0	0	0	0	0	0	8	0	0	0	0	8
121 L45534	LAUNCHER ROCKET + 762MM TRUCK MOUNTED W/E (HONEST JOHN).	0	0	0	0	0	0	0	4	0	0	0	0	4
	CLASS 7M—WEAPONS													
122 A89819	ARMAMENT POD AIRCRAFT 7.62 MILLIMETER MACHINE GUN + W/E.	0	0	0	0	0	0	10	0	0	0	0	0	10
123 A90117	ARMAMENT SUBSYSTEM HELI-HELICOPTER 7.62 MILLI-METER MACHINE GUN + LIGHT.	0	0	0	0	0	0	6	0	0	0	0	0	6
124 A90122	ARMAMENT SUBSYSTEM HELI-COPTER 7.62MM MACHINE GUN + DOOR MTD L W.	0	0	0	0	0	0	2	0	0	0	0	0	2
125 A90154	ARMAMENT SUBSYSTEM HELI-COPTER 7.62MM MACHINE GUN + HIGH RATE.	0	0	0	0	0	0	9	0	0	0	0	0	9
126 A90436	ARMAMENT SUBSYS HEL 7.62 MM MG—40MM GRENADE LNCHR + HIGH RATE.	0	0	0	0	0	0	9	0	0	0	0	0	9
127 A93124	ARMORED RECONNAISSANCE AIRBORNE-ASSAULT VEHICLE +.	0	0	0	0	0	0	27	0	0	0	0	0	27
128 E56577	COMBAT ENGINEER VEHICLE FULL TRACKED +.	0	0	0	0	8	0	0	0	0	0	0	0	8
129 G02204	DETECTING SET MINE + PTBL METALLIC AND NONMETAL-LIC.	0	4	0	7	62	0	10	24	2	5	1	5	140
130 G02341	DETECTING SET MINE + PTBL METALLIC.	0	4	0	13	49	0	10	24	2	5	3	5	145
131 J96694	GUN ANTIAIRCRAFT ARTIL-LERY SELF-PROPELLED + 20MM.	0	0	0	0	0	0	0	0	0	24	0	0	24
132 K56981	HOWITZER HEAVY SELF PRO-PELLED + 8 INCH.	0	0	0	0	0	0	0	12	0	0	0	0	12
133 K57666	HOWITZER MEDIUM SELF PRO-PELLED + 155MM.	0	0	0	0	0	0	0	54	0	0	0	0	54

134	L44595	LAUNCHER GRENADE + 40 MILLIMETER.	0	0	0	0	0	0	0	0	0	80	54	0	324
135	L91975	MACHINE GUN CALIBER .50 + HB FLEXIBLE FOR GROUND USE.	2	0	0	0	0	3	32	0	0 (4)	0	46	24	415 (4)
136	L92386	MACHINE GUN 7.62 MILLIMETER + LIGHT FLEXIBLE.	0	9	3	10	15	0 (5)	13	165	67 (1)	20	49	4	612 (16)
137	M68008	MORTAR 81 MILLIMETER + ON MOUNT.	0	0	0	0	0	0	0	0	0	0	9	0	54
138	M68282	MORTAR 4.2 INCH + ON MOUNT.	0	0	0	0	0	0	9	0	0	0	4	4	49
139	M75577	MOUNT TRIPOD MACHINE GUN + HEAVY CALIBER .50.	2	0	0	0	0	3	32	0	0 (4)	0	26	24	295 (4)
140	M75714	MOUNT TRIPOD MACHINE GUN + 7.62 MILLIMETER.	0	5	3	10	15	0 (5)	13	165	67 (1)	20	49	4	608 (16)
141	N96741	PISTOL CALIBER .45 AUTOMATIC +.	32 (3)	149	0	24	76	17 (20)	178 (2)	94	88	25	174	280	2881 (65)
142	R50543	RECOVERY VEHICLE FULL TRACKED + LIGHT ARMORED.	0	0	0	0	0	1	5	8	0	5	6	1	61
143	R50680	RECOVERY VEHICLE FULL TRACKED + MEDIUM.	0	0	0	0	2	0	0	1	4	0	0	5	27
144	R91107	REVOLVER CALIBER .38 + 2 INCH BARREL.	0	2	0	0	0	0	0	0	0	0	0	0	2
145	R91244	REVOLVER CALIBER .38 + 4 INCH BARREL.	3	0	27	0	0	4	62 (15)	18	14	0	0	0	136 (15)
146	R94977	RIFLE 5.56 MILLIMETER + W/E	153 (2)	186 (1)	74 (8)	636 (9)	912 (78)	93 (38)	637 (32)	2654 (74)	2144 (292)	532 (121)	717 (73)	284 (38)	13642 (1321)
147	R96484	RIFLE RECOILLESS 90 MILLIMETER +.	0	9	0	0	0	0 (2)	0	0	0	0	18	0	117 (6)
148	R96758	RIFLE RECOILLESS 106 MILLIMETER + ON MOUNT.	0	0	0	0	0	0 (3)	0	0	0	0	8	0	48 (9)
149	U56346	SUBMACHINE GUN CALIBER .45 +.	0	0	0	0	0	6	38	0	0	0	12	120	608
150	V13100	TANK COMBAT FULL TRACKED + 105MM GUN.	0	0	0	0	0	0	0	0	0	0	0	54	216
		CLASS 7N—SPECIAL WEAPONS													
151	H68063	FLAME THROWER PORTABLE +.	0	0	0	0	0	0	0	0	0	0	9	0	54
		CLASS 7Q—GENERAL EQUIPMENT													
152	B83856	BOAT LANDING INFLATABLE + ASSAULT CRAFT NYLON CLOTH 15 MAN.	0	0	0	0	18	0	0	0	0	0	0	0	18
153	B84404	BOAT RECONNAISSANCE + PNEUMATIC 3-MAN.	0	0	0	0	32	0	0	0	0	0	0	0	32
154	J04716	FUEL SYSTEM SUPPLY POINT + PORTABLE 6000 GAL CAP.	0	0	0	0	0	0	0	0	1	0	0	0	1

Table 1-7. Summary of Equipment—Type of Infantry Division (Mechanized) (With Mobile Assault Bridge)—Continued

1 LIN	2 Nomenclature	3 HHC (37-4H)	4 MP co (19-27H)	5 Div avn co (37-37H)	6 Sig bn (11-35H)	7 Engr bn (5-145H)	8 3 bde HHC (37-42H) (ea)	9 Armd cav sqdn (17-105H)	10 Div arty (6-300H)	11 DISCOM (29-11H)	12 ADA bn (44-325H)	13 6 inf bn (mech) (7-45H) (ea)	14 4 tk bn (17-35H) (ea)	15 Div total (37H)
155 T10138	SHOP EQUIP CONTACT MAINT TRK MTD+.	0	0	0	0	2	0	0	0	1	0	0	0	3
156 T10275	SHOP EQUIP ELEC REP SEMI-TRLR MTD+ ARMY.	0	0	0	0	0	0	0	0	1	0	0	0	1
157 T13152	SHOP EQUIP ORGANZL REP LIGHT TRK MTD+.	0	0	0	0	1	0	0	0	0	0	0	0	1
158 V12141	TANK AND PUMP UNIT LIQUID DISPENSING TRUCKMOUNTING+.	0	0	0	0	6	0	5	10	10	9	4	5	84
159 V19950	TANK UNIT LIQUID DISPENSING TRAILER MOUNTING+.	0	0	0	0	6	0	0	8	8	5	4	5	71

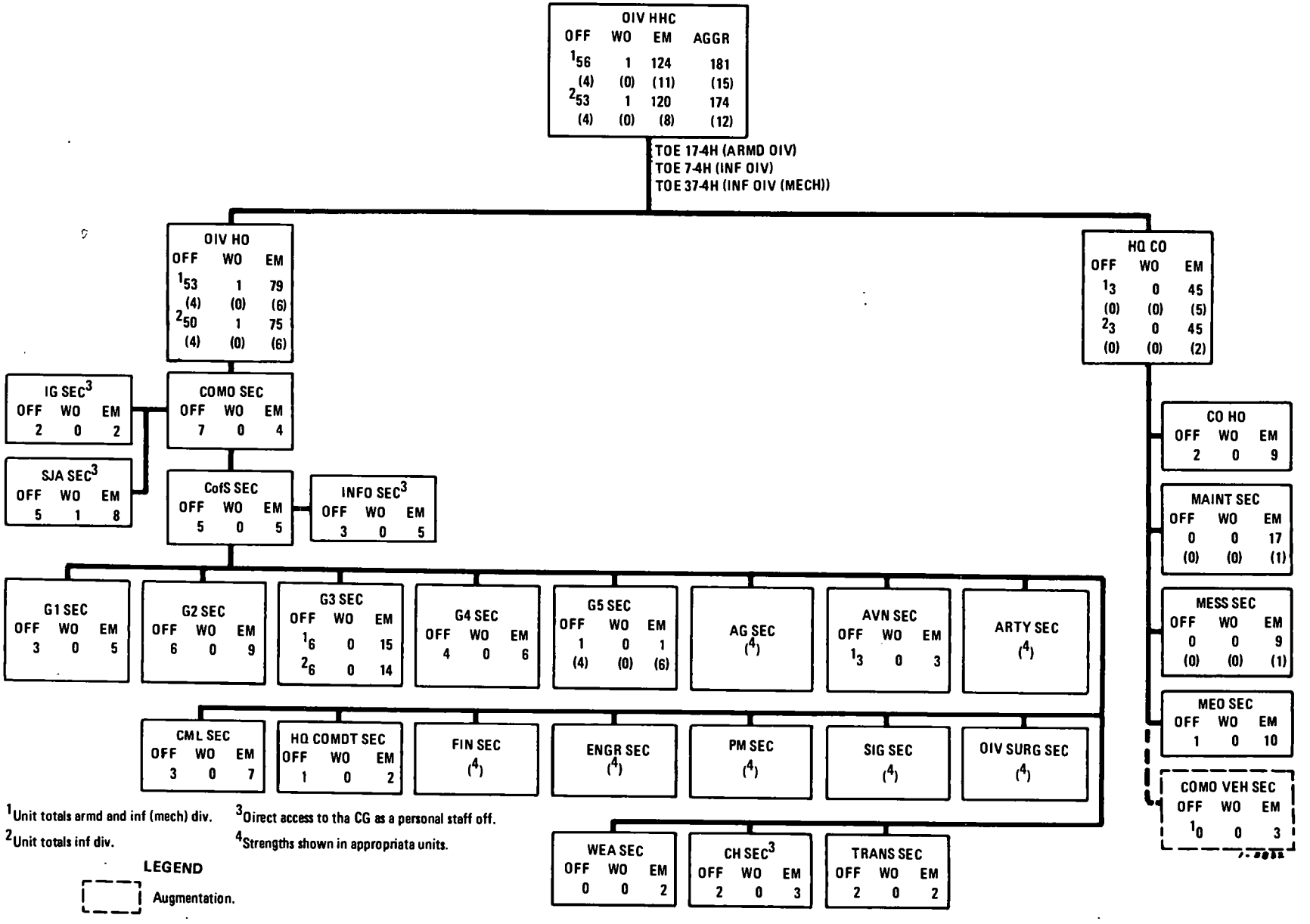

Figure 1–7. HHC, armored, infantry, and infantry (mechanized) divisions.

1. MISSION

a. HQ. To command, control, and supervise operations of the division and attached units.

b. HQ company. To provide personnel and administrative support for the HQ.

2. ASSIGNMENT

a. Organic to armored division, TOE 17H.

b. Organic to infantry division, TOE 7H.

c. Organic to infantry division (mechanized), TOE 37H.

3. CAPABILITIES

a. HQ. Provides command, staff planning, control, and supervision of administration and operations of the division and attached units; operates a main CP; and establishes an alternate CP, when required.

b. HQ company. Provides administration, supply, organizational maintenance, mess, and unit-level medical service support for division HHC. Provides mess for the military police company.

4. MOBILITY

One hundred-percent mobile in organic vehicles.

Figure 1–7—Continued

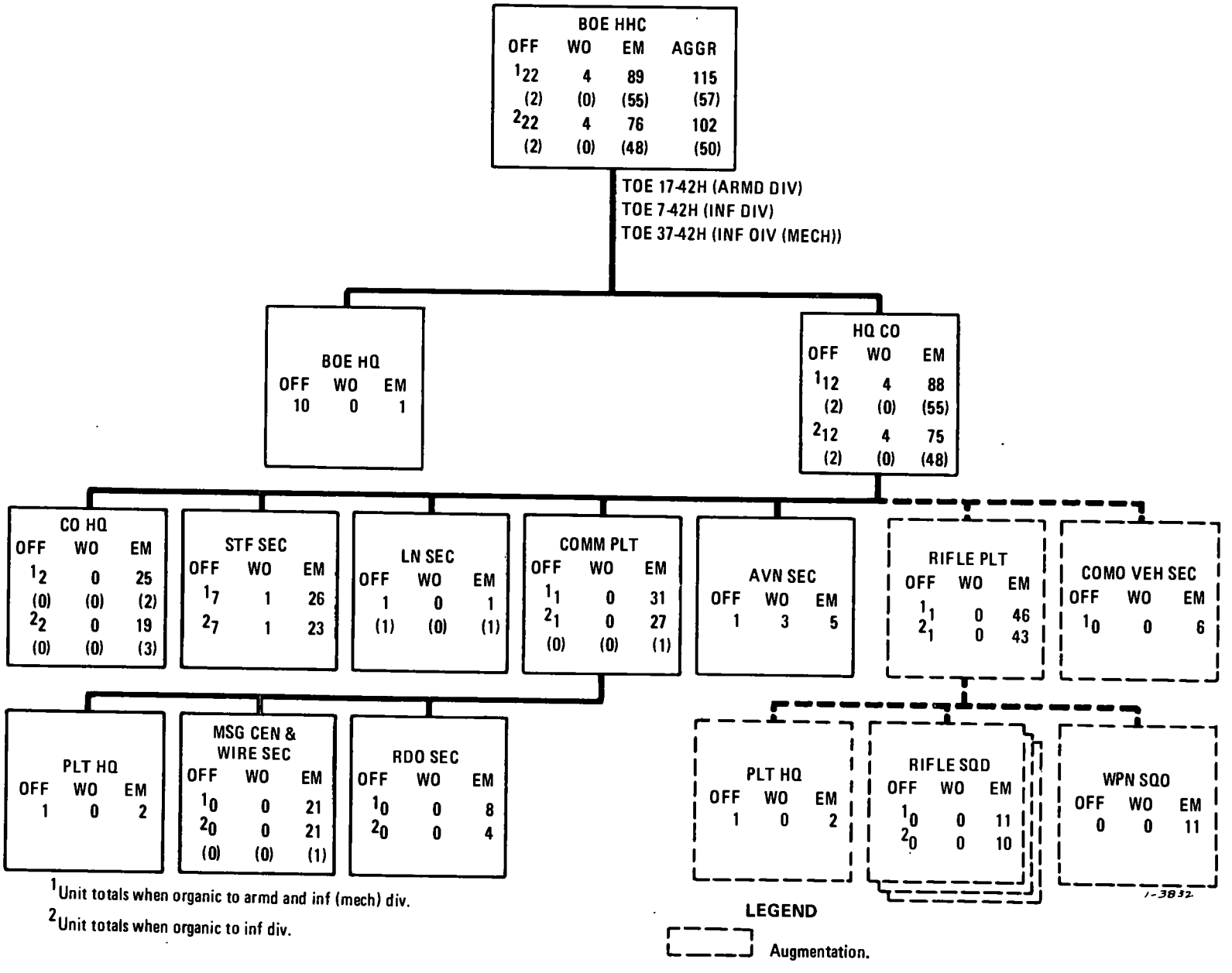

Figure 1–8. HHC, armored, infantry, and infantry (mechanized) division brigades.

1. MISSION

a. HQ. To command, control, and supervise tactical operations of the brigade and attached units.

b. HQ company. To provide personnel and administrative support for the HQ.

2. ASSIGNMENT

a. Organic to armored division, TOE 17H.

b. Organic to infantry division, TOE 7H.

c. Organic to infantry division (mechanized), TOE 37H.

3. CAPABILITIES

a. Commands attached elements of the division's combat and combat support elements in offensive and defensive combat operations.

b. Accepts or releases attached elements on short notice.

c. Conducts brigade operations on a sustained 24-hour-a-day basis.

d. Supervises the movement and security of attached or supporting administrative elements.

e. Establishes liaison with higher and adjacent HQ.

f. Supervises tactical training of attached divisional elements.

g. Acts as emergency successor operational HQ for the division in event of destruction of division HQ.

h. Can control up to five maneuver battalions.

i. Depends on division artillery for nuclear fire support.

j. Furnishes chaplain support for the attached maneuver battalions.

4. MOBILITY

a. HHC, armored or infantry (mechanized) brigade: 100-percent mobile in organic vehicles.

b. HHC, infantry. brigade: 72-percent mobile in organic vehicles and aircraft.

Figure 1–8—Continued

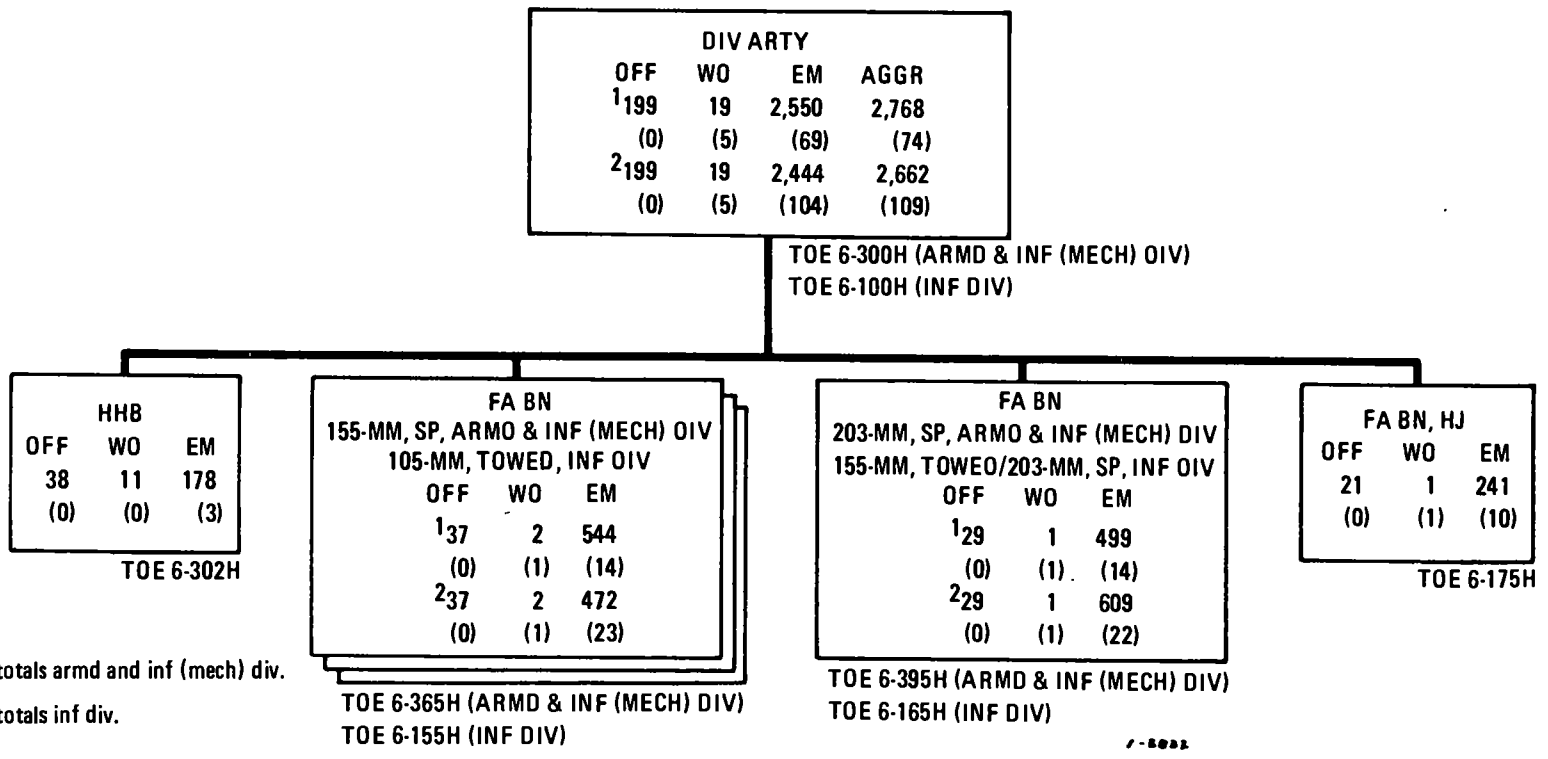

1. MISSION

To provide field artillery fire support for an armored, infantry, or infantry (mechanized) division.

2. ASSIGNMENT

a. Organic to armored division, TOE 17H.

b. Organic to infantry division, TOE 7H.

c. Organic to infantry division (mechanized), TOE 37H.

3. CAPABILITIES

a. Delivers nuclear and nonnuclear field artillery fires of appropriate type, caliber, and density under all conditions of weather, visibility, and terrain.

b. Provides the field artillery fire support element of the division tactical operations center.

c. Commands and controls organic and attached field artillery units.

d. Provides liaison and forward observer support to three brigades and their attached maneuver battalions.

4. MOBILITY

One hundred-percent mobile in organic vehicles.

Figure 1–9. Armored, infantry, and infantry (mechanized) division artillery.

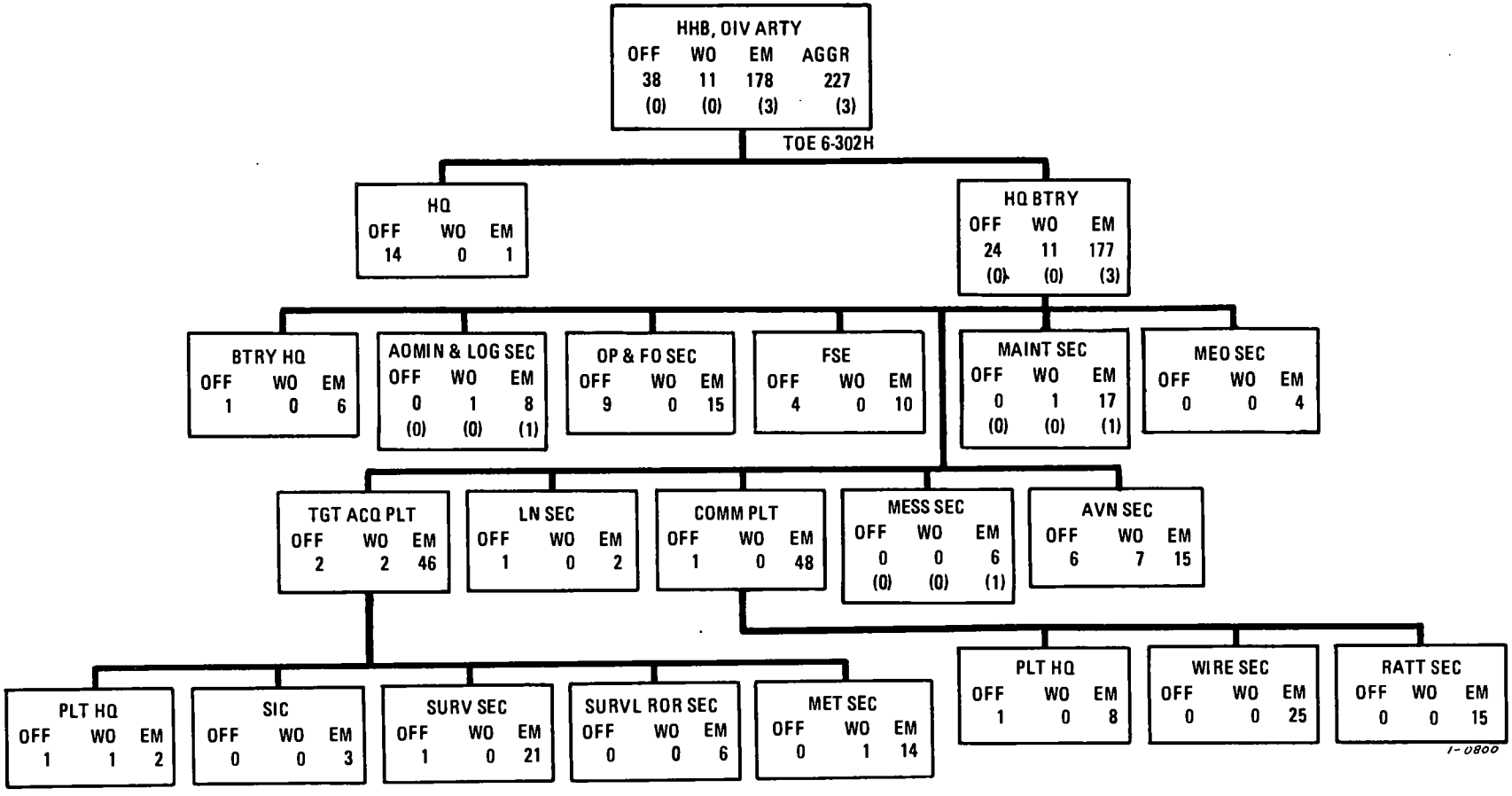

1. MISSION

To direct and coordinate operations of division artillery and attached units and to provide facilities for control of these units.

2. ASSIGNMENT

a. Organic to division artillery, armored or infantry (mechanized) division, TOE 6-300H.

b. Organic to division artillery, infantry division, TOE 6-100H.

3. CAPABILITIES

a. Plans, supervises, coordinates, and controls units organic to division artillery and attached units.

b. Provides its component of the artillery weapon systems, to include its required means for target acquisition, fire control and coordination, communications, survey, ballistic meteorology, transportation, and logistics.

c. Provides unit-level medical service, including medical care and intraunit evacuation, to division artillery HHB and attached units.

d. Provides a liaison section, as required.

e. Provides the field artillery fire support element of the division tactical operations center.

4. MOBILITY

One hundred-percent mobile in organic vehicles.

Figure 1–10. HHB, armored, infantry, and infantry (mechanized) division artillery.

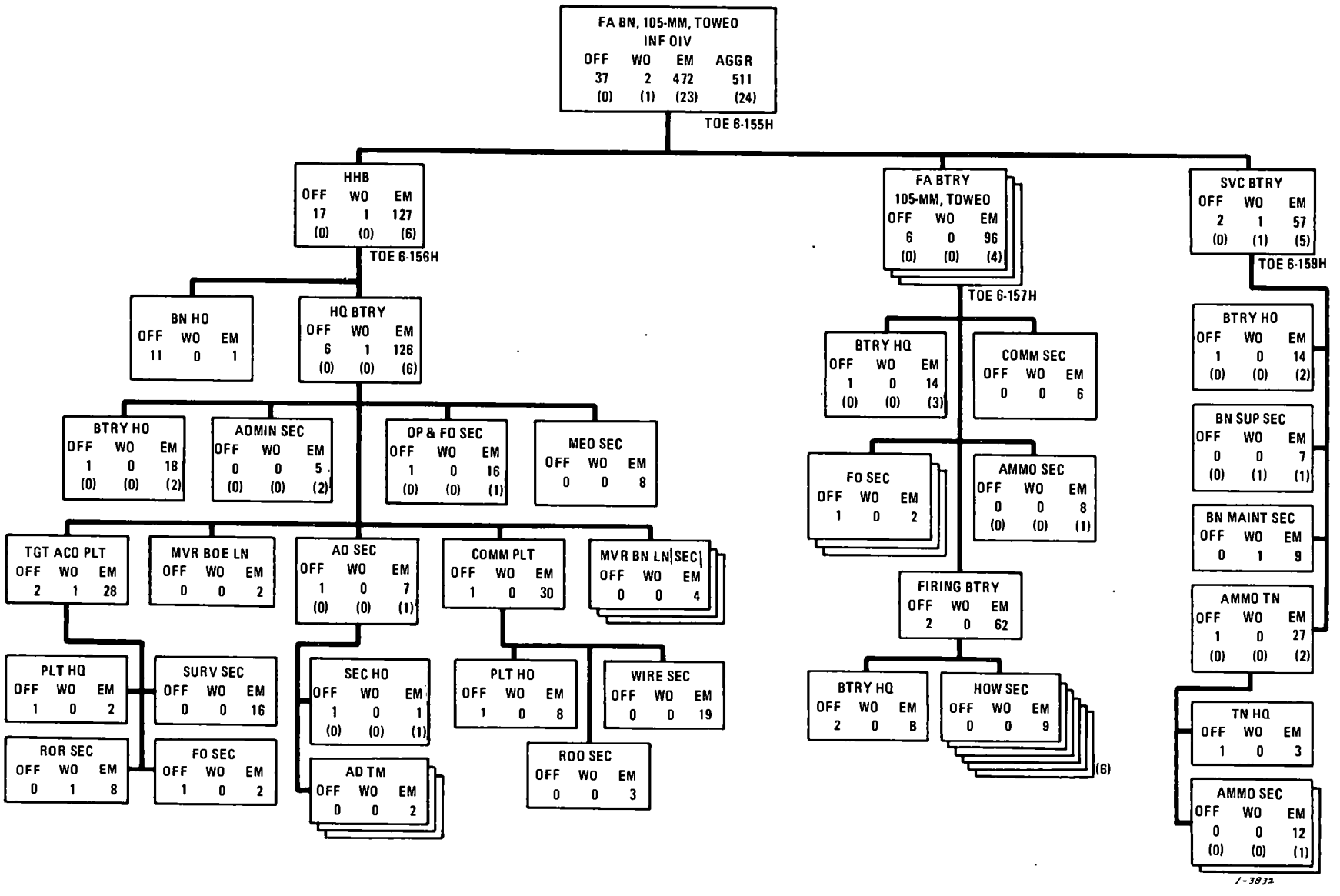

Figure 1–11. Field artillery battalion, 105-mm, towed, infantry division.

TOE 6-155H FA BN, 105-MM, TOWED, INF DIV

1. MISSION

To provide field artillery fires in direct support of a maneuver brigade (tank or infantry) and to reinforce the fires of other field artillery units.

2. ASSIGNMENT

Organic to division artillery, infantry division, TOE 6-100H.

3. CAPABILITIES

a. Provides continuous and timely field artillery fires in support of the supported unit.

b. Provides its component of division artillery communication, air defense, survey, and target acquisition systems.

c. Provides medical services for organic units, to include medical care and intrabattalion evacuation.

d. Procures and distributes all classes of supplies to organic units, maintains appropriate supply and materiel records, and transports its prescribed basic load of ammunition.

e. Provides liaison and forward observer support to one maneuver brigade with up to three maneuver battalions.

4. MOBILITY

One hundred-percent mobile in organic vehicles.

TOE 6-156H HHB, FA BN, 105-MM, TOWED, INF DIV

1. MISSION

To direct and coordinate operations of the battalion and to provide facilities with which the battalion commander controls the battalion.

2. ASSIGNMENT

Organic to field artillery battalion, 105-mm, towed, infantry division, TOE 6-155H.

3. CAPABILITIES

a. Plans, supervises, coordinates, and controls operations of organic units of the battalion.

b. Provides survey control for the battalion.

c. Provides unit-level medical services, to include medical care and intrabattalion evacuation, establishes an aid station, furnishes aidmen to organic units of the battalion, and supervises field sanitation within the battalion.

d. Provides liaison sections to support one maneuver brigade with three maneuver battalions (tank or infantry).

e. Provides air defense against low-altitude hostile aircraft.

f. Provides its portion of the battalion communication and target acquisition systems.

4. MOBILITY

One hundred-percent mobile in organic vehicles.

Figure 1-11—Continued

TOE 6-157H FA BTRY, 105-MM, TOWED, FA BN, 105-MM, TOWED, INF DIV

1. MISSION

To provide a firing component of the field artillery battalion, 105-mm, towed.

2. ASSIGNMENT

Organic to field artillery battalion, 105-mm, towed, infantry division, TOE 6-155H.

3. CAPABILITIES

a. Delivers 105-mm fires of appropriate type and density at time and place required.

b. Furnishes its portion of the battalion communication, survey, and target acquisition systems.

c. Transports its portion of the battalion basic load of ammunition.

4. MOBILITY

One hundred-percent mobile in organic vehicles.

TOE 6-159H SVC BTRY, FA BN, 105-MM, TOWED, INF DIV

1. MISSION

To procure and distribute all classes of supplies to units of the battalion, to maintain appropriate supply records, and to perform organizational maintenance not otherwise accomplished within the battalion.

2. ASSIGNMENT

Organic to field artillery battalion, 105-mm, towed, infantry division, TOE 6-155H.

3. CAPABILITIES

a. Procures and distributes all classes of supplies to units of the battalion.

b. Maintains appropriate supply records.

c. Provides battalion-level automotive maintenance support.

d. Transports its portion of the battalion basic load of ammunition.

4. MOBILITY

One hundred-percent mobile in organic vehicles.

Figure 1–11—Continued

Table 1-8. Summary of Equipment—Armored, Infantry, and Infantry (Mechanized) Division Artillery

1	2	3	4	5	6	7	8	9	10	11	12
LIN	Nomenclature	HHB armd, inf and inf (mech div (6-302H)	3 105-mm towed inf div (6-155H)		FA bn 3 155-mm, SP armd and inf (mech) div (6-365H)		155-mm towed/8-in., SP inf div (6-165H)	8-in., SP armd and inf (mech) div (6-395H)	HJ, armd inf, and inf (mech) div (6-175H)	Armd and inf (mech) div arty total (6-300H)	Inf div arty total (6-100H)
			(1)	(3)	(1)	(3)					
	CLASS 7A—AIR										
1 K30645	HELICOPTER OBSERVATION + OH-6A.	9	0	0	0	0	0	0	0	9	9
2 K31749	HELICOPTER UTILITY + UH-1B	2	0	0	0	0	0	0	0	2	2
	CLASS 7B—GROUND SUPPORT										
3 E69242	COMP RCP PWR DRVN + AIR REC GAS DRVN 15 CFM 175 PSI.	0	1	3	1	3	1	1	1	5	5
4 E70064	COMP RCP PWR DRVN + TRK 2 WHL PNEU TIRES GAS DRVN 5 CFM 175 PSI.	1	5	15	5	15	6	5	3	24	25
5 J41452	GENERATOR SET GASOLINE ENGINE TRAILER MTD + PU-304 MPQ-4A.	0	1	3	1	3	0	0	0	3	3
6 J41589	GENERATOR SET GASOLINE ENGINE TRAILER MTD + PU-322/G.	1	0	0	0	0	0	0	0	1	1
7 J43918	GEN ST GAS ENG + 1.5KW 60CY 1PH 2 WIRE AC 120V SHOCK.	4	5	15	6	18	6	6	4	32	29
8 J44055	GEN ST GAS ENG + 1.5KW DC 28V SHOCK.	1	5	15	1	3	2	2	1	7	19
9 J45699	GEN ST GAS ENG + 3KW 60CY 1-3PH 1-20/240V 120/208V SKID SHOCK.	2	0	0	0	0	0	0	0	3	3
10 P96640	PUMPING ASSEMBLY FLAMMABLE LIQUID BULK TRANSFER +.	1	0	0	0	0	0	0	0	1	1
	CLASS 7G—ELECTRONICS										
11 Q15414	RADAR SET + AN/MPQ-4 LESS POWER.	0	1	3	1	3	0	0	0	3	3
12 Q17332	RADAR SET + AN/TPS-25 LESS POWER.	1	0	0	0	0	0	0	0	1	1
13 Q32756	RADIO SET AN/GRC-106	1	0	0	0	0	0	0	0	1	1
14 Q34308	RADIO SET AN/GRC-160	3	12	36	15	45	4	3	2	53	45
15 Q38299	RADIO SET + AN/PRC-77	4	5	15	5	15	6	9	4	32	29
16 Q42092	RADIO SET + AN/URC-10	11	0	0	0	0	0	0	0	11	11

17	Q53001	RADIO SET AN/VRC-46	15	23	69	23	69	24	24	20	128	128
18	Q54154	RADIO SET AN/VRC-47	2	6	18	6	18	7	6	4	30	31
19	Q55114	RADIO SET AN/VRC-49	1	5	15	5	15	2	2	1	19	19
20	Q56783	RADIO SET AN/VRC-64	0	1	3	2	6	2	3	0	9	5
21	Q90120	RADIO TELETYPEWRITER SET + AN/GRC-142 LESS POWER.	7	1	3	2	6	2	5	3	21	15
22	U81707	SWITCHBOARD TELEPHONE MANUAL + SE-22/PT.	2	7	21	7	21	8	7	5	35	36
23	U82255	SWITCHBOARD TELEPHONE MANUAL + SE-86/P.	2	0	0	0	0	0	0	0	2	2
24	U82529	SWITCHBOARD TELEPHONE MANUAL + SE-993/GT.	0	7	21	7	21	4	3	2	26	27
25	V30252	TELEPHONE SET + TA-1/PT	0	6	18	6	18	8	6	0	24	26
26	V30937	TELEPHONE SET + TA-264/PT	2	1	3	1	3	1	1	1	7	7
27	V31211	TELEPHONE SET + TA-312/PT	48	119	357	117	351	105	88	79	566	589
28	V42105	TELETYPEWRITER SET + AN/PGC-1.	2	0	0	0	0	0	0	0	2	2
		CLASS 7K—TACTICAL VEHICLES										
29	D11538	CARRIER COMMAND POST + LIGHT TRACKED.	0	0	0	10	30	2	5	0	35	2
30	W94030	TRAILER AMMUNITION + 1-1/2 TON 2 WHEEL W/E.	0	24	72	29	87	28	16	0	103	100
31	W95400	TRAILER CARGO + 1/4 TON 2 WHEEL W/E.	5	21	63	21	63	14	10	8	86	90
32	W95537	TRAILER CARGO + 3/4 TON 2 WHEEL W/E.	10	23	69	14	42	23	18	14	84	116
33	W95811	TRAILER CARGO + 1-1/2 TON 2 WHEEL W/E.	11	11	33	11	33	16	18	10	72	70
34	W98825	TRAILER TANK + WATER 400 GALLON 1-1/2 TON 2 WHEEL W/E.	2	5	15	5	15	6	5	3	25	26
35	X38776	TRUCK AMBULANCE + 3/4 TON 4×4 WE.	1	1	3	1	3	1	1	1	6	6
36	X39735	TRUCK CARGO + 3/4 TON 4×4 W/E	17	25	75	17	51	22	25	25	118	139
37	X39872	TRUCK CARGO + 3/4 TON 4×4 W/WINCH W/E.	9	8	24	11	33	14	10	6	58	53
38	X40009	TRUCK CARGO + 2-1/2 TON 6×6 W/E	7	14	42	13	39	15	10	8	88	72
39	X40146	TRUCK CARGO + 2-1/2 TON 6×6 W/WINCH W/E.	5	49	147	7	21	8	5	7	38	167
40	X40283	TRUCK CARGO + 2-1/2 TON 6×6 XLWB-W/E.	0	0	0	0	0	0	0	2	2	2
41	X40831	TRUCK CARGO + 5 TON 6×6 LWB W/E.	0	0	0	16	48	0	0	0	48	0
42	X40968	TRUCK CARGO + 5 TON 6×6 LWB W/WINCH W/E.	1	1	3	15	45	48	23	1	70	53
43	X57271	TRUCK TANK + FUEL SERVICING 2-1/2 TON 6×6 W/E.	1	0	0	0	0	0	0	0	1	1
44	X60833	TRUCK UTILITY + 1/4 TON 4×4 W/E.	17	35	105	33	99	27	27	20	163	169

Table 1-8. Summary of Equipment—Armored, Infantry, and Infantry (Mechanized) Division Artillery—Continued

1	2	3	4	5	6	7	8	9	10	11	12
LIN	Nomenclature	HHB armd, inf and inf (mech div (6-302H)	3 105-mm towed inf div (6-155H)		FA bn 3 155-mm, SP armd and inf (mech) div (6-365H)		155-mm towed/8-in., SP inf div (6-165H)	8-in., SP armd and inf (mech) div (6-395H)	HJ, armd inf, and inf (mech) div (6-175H)	Armd and inf (mech) div arty total (6-300H)	Inf div arty total (6-100H)
			(1)	(3)	(1)	(3)					
45 X62340	TRUCK VAN + SHOP 2-1/2 TON 6×6 W/E.	2	2	6	1	3	3	6	3	14	14
46 X62477	TRUCK VAN + SHOP 2-1/2 TON 6×6 W/WINCH W/E.	3	0	0	0	0	0	0	0	3	3
47 X63299	TRUCK WRECKER + 5 TON 6×6 W/WINCH W/E.	0	1	3	1	3	1	1	5	9	9
	CLASS 7L—MISSILES										
48 K27486	HEATING AND TIE-DOWN UNIT 762MM ROCKET TRK MTD + W/E (HONEST JN).	0	0	0	0	0	0	0	8	8	8
49 L45534	LAUNCHER ROCKET + 762MM TRUCK MOUNTED W/E (HONEST JOHN).	0	0	0	0	0	0	0	4	4	4
	CLASS 7M—WEAPONS										
50 G02204	DETECTING SET MINE + PTBL METALLIC AND NON METALLIC.	1	5	15	5	15	6	5	3	24	25
51 G02341	DETECTING SET MINE + PTBL METALLIC.	1	5	15	5	15	6	5	3	24	25
52 K56981	HOWITZER HEAVY SELF PROPELLED + 8 INCH.	0	0	0	0	0	4	12	0	12	4
53 K57529	HOWITZER TOWED + 105 MILLIMETER.	0	18	54	0	0	0	0	0	0	54
54 K57666	HOWITZER MEDIUM SELF PROPELLED + 155MM.	0	0	0	18	54	0	0	0	54	0
55 K57803	HOWITZER MEDIUM TOWED + 155 MILLIMETER.	0	0	0	0	0	18	0	0	0	18
56 L92386	MACHINE GUN 7.62 MILLIMETER + LIGHT FLEXIBLE.	10	31	93	33	99	41	37	19	165	163
57 M75714	MOUNT TRIPOD MACHINE GUN + 7.62 MILLIMETER.	10	31	93	33	99	41	37	19	165	163
58 N96741	PISTOL CALIBER .45 AUTOMATIC +	22	16	48	15	45	18	15	12	94	100
59 R50543	RECOVERY VEHICLE FULL TRACKED + LIGHT ARMORED.	0	0	0	2	6	1	2	0	8	1
60 R50680	RECOVERY VEHICLE FULL TRACKED + MEDIUM.	0	0	0	0	0	0	1	0	1	0

61	R91244	REVOLVER CALIBER .38+ 4 INCH BARREL.	18	0	0	0	0	0	0	0	18	18
62	R94977	RIFLE 5.56 MILLIMETER+ W/E------	185(3)	495(24)	1,485(72	568(15)	1,704(45)	622(23)	514(15)	251(11)	2,654(74)	2,542 (109)
		CLASS 70—GENERAL EQUIPMENT										
63	V12141	TANK AND PUMP UNIT LIQUID DISPENSING TRUCKMOUNTING+.	1	1	3	2	6	2	2	1	10	7
64	V19950	TANK UNIT LIQUID DISPENSING TRAILER MOUNTING+.	0	0	0	2	6	2	2	0	8	2

Table 1-9. Summary of Equipment—Field Artillery Battalion, 105-mm, Towed, Infantry Division

1	2	3	4	5	6	7
LIN	Nomenclature	HHB (6-156H)	3 FA btry 105-mm, towed (5-157H)		Svc btry (6-159H)	Bn total (6-155H)
			(1)	(3)		
	CLASS 7B—GROUND SUPPORT					
1 E69242	COMP RCP PWR DRVN+ AIR REC GAS DRVN 15 CFM 175 PSI.	0	0	0	1	1
2 E70064	COMP RCP PWR DRVN+ TRK 2 WHL PNEU TIRES GAS DRVN 5 CFM 175 PSI.	1	1	3	1	5
3 J41452	GENERATOR SET GASOLINE ENGINE TRAILER MTD+ PU-304 MPQ-4A.	1	0	0	0	1
4 J43918	GEN ST GAS ENG+ 1.5KW 60CY 1PH 2 WIRE AC 120V SHOCK.	1	1	3	1	5
5 J44055	GEN ST GAS ENG+ 1.5KW DC 28V SHOCK	5	0	0	0	5
	CLASS 7G—ELECTRONICS					
6 Q15414	RADAR SET+ AN/MPQ-4 LESS POWER	1	0	0	0	1
7 Q34308	RADIO SET AN/GRC-160	3	3	9	0	12
8 Q38299	RADIO SET+ AN/PRC-77	5	0	0	0	5
9 Q53001	RADIO SET AN/VRC-46	11	3	9	3	23
10 Q54154	RADIO SET AN/VRC-47	3	1	3	0	6
11 Q55114	RADIO SET AN/VRC-49	5	0	0	0	5
12 Q56783	RADIO SET AN/VRC-64	1	0	0	0	1
13 Q90120	RADIO TELETYPEWRITER SET+ AN/GRC-142 LESS POWER.	1	0	0	0	1
14 U81707	SWITCHBOARD TELEPHONE MANUAL+ SB-22/PT.	3	1	3	1	7
15 U82529	SWITCHBOARD TELEPHONE MANUAL+ SB-993/GT.	4	1	3	0	7
16 V30252	TELEPHONE SET+ TA-1/PT	6	0	0	0	6
17 V30937	TELEPHONE SET+ TA-264/PT	1	0	0	0	1
18 V31211	TELEPHONE SET+ TA-312/PT	38	24	72	9	119
	CLASS 7K—TACTICAL VEHICLES					
19 W94030	TRAILER AMMUNITION+ 1-1/2 TON 2 WHEEL W/E.	0	4	12	12	24
20 W95400	TRAILER CARGO+ 1/4 TON 2 WHEEL W/E	11	3	9	1	21
21 W95537	TRAILER CARGO+ 3/4 TON 2 WHEEL W/E	13	3	9	1	23
22 W95811	TRAILER CARGO+ 1-1/2 TON 2 WHEEL W/E	2	1	3	6	11
23 W98825	TRAILER TANK+ WATER 400 GALLON 1-1/2 TON 2 WHEEL W/E.	1	1	3	1	5
24 X38776	TRUCK AMBULANCE+ 3/4 TON 4×4 WE	1	0	0	0	1
25 X39735	TRUCK CARGO+ 3/4 TON 4×4 W/E	14	3	9	2	25
26 X39872	TRUCK CARGO+ 3/4 TON 4×4 W/WINCH W/E	5	1	3	0	8
27 X40009	TRUCK CARGO+ 2-1/2 TON 6×6 W/E	3	2	6	5	14
28 X40146	TRUCK CARGO+ 2-1/2 TON 6×6 W/WINCH W/E	1	11	33	15	49
29 X40968	TRUCK CARGO+ 5 TON 6×6 LWB W/WINCH W/E.	0	0	0	1	1
30 X60833	TRUCK UTILITY+ 1/4 TON 4×4 W/E	20	4	12	3	35
31 X62340	TRUCK VAN+ SHOP 2-1/2 TON 6×6 W/E	2	0	0	0	2
32 X63299	TRUCK WRECKER+ 5 TON 6×6 W/WINCH W/E	0	0	0	1	1
	CLASS 7M—WEAPONS					
33 G02204	DETECTING SET MINE+ PTBL METALLIC AND NONMETALLIC.	1	1	3	1	5
34 G02341	DETECTING SET MINE+ PTBL METALLIC	1	1	3	1	5
35 K57529	HOWITZER TOWED+ 105 MILLIMETER	0	6	18	0	18

Table 1-9. Summary of Equipment—Field Artillery Battalion, 105-mm, Towed, Infantry Division—Continued

1	2	3	4	5	6	7
LIN	Nomenclature	HHB (6-156H)	3 FA btry 105-mm, towed (5-157H)		Svc btry (6-159H)	Bn total (6-155H)
			(1)	(3)		
86 L92386	MACHINE GUN 7.62 MILLIMETER+ LIGHT FLEXIBLE.	5	7	21	5	31
87 M75714	MOUNT TRIPOD MACHINE GUN+ 7.62 MILLIMETER.	5	7	21	5	31
88 N96741	PISTOL CALIBER .45 AUTOMATIC+	12	1	3	1	16
89 R94977	RIFLE 5.56 MILLIMETER+ W/E	132(6)	101(4)	303(12)	60(6)	495(24)
	CLASS 7Q—GENERAL EQUIPMENT					
40 V12141	TANK AND PUMP UNIT LIQUID DISPENSING TRUCKMOUNTING+.	0	0	0	1	1

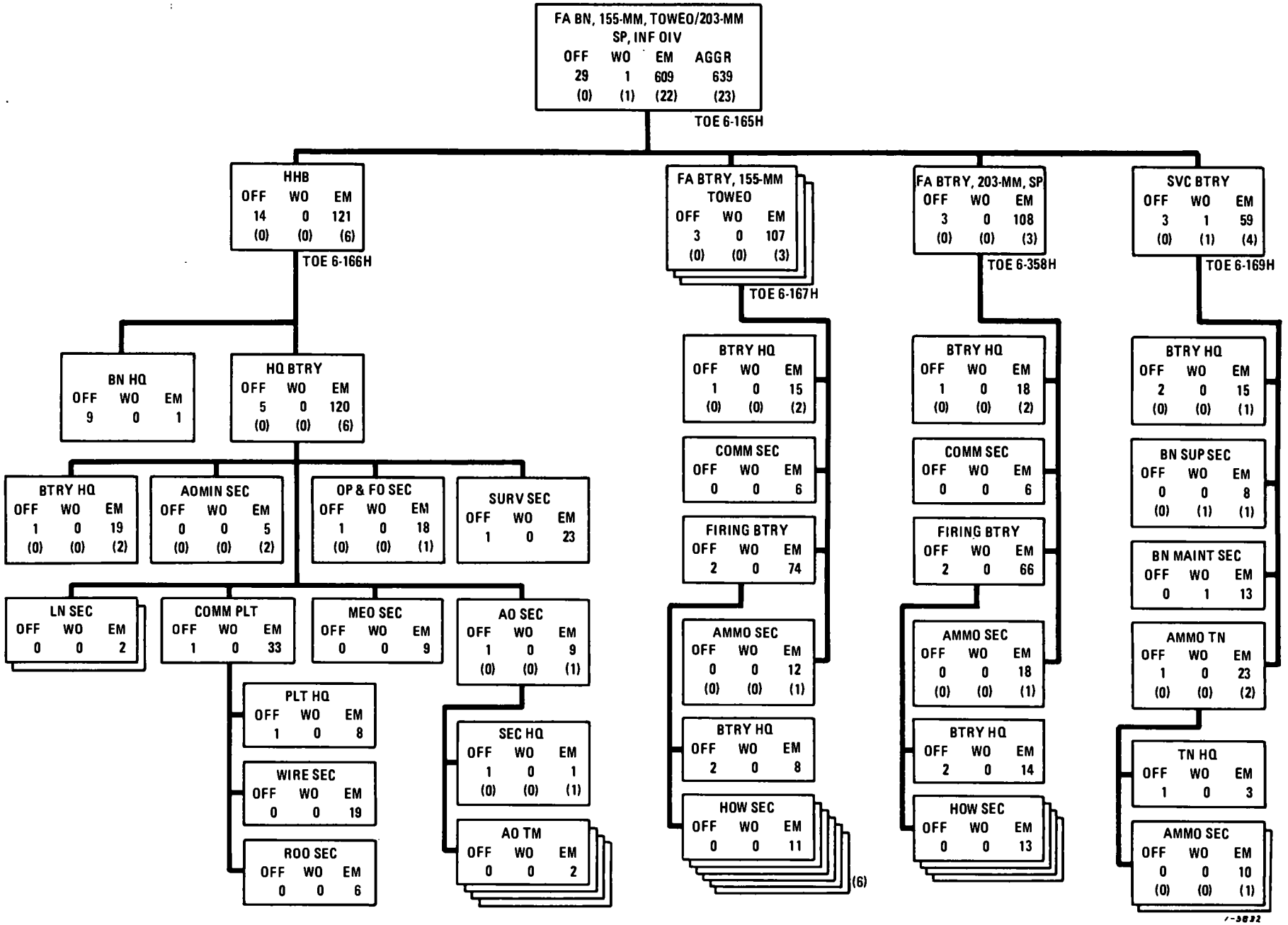

Figure 1–12. Field artillery battalion, 155-mm, towed/203-mm, self-propelled, infantry division.

TOE 6-165H FA BN, 155-MM, TOWED/203-MM, SP, INF DIV

1. MISSION

To provide field artillery fires, to include nuclear, in general support of an infantry division and to reinforce the fires of other field artillery units.

2. ASSIGNMENT

Organic to division artillery, infantry division, TOE 6-100H.

3. CAPABILITIES

a. Provides continuous and timely field artillery fire support to the supported force, to include nuclear fires.

b. Provides its component of division artillery communication, survey, air defense, and target acquisition systems.

c. Procures and distributes all classes of supply to organic units, maintains appropriate supply and materiel records, and transports its prescribed basic load of ammunition.

d. Provides medical services for organic units, to include medical care and intrabattalion evacuation.

4. MOBILITY

One hundred-percent mobile in organic vehicles.

TOE 6-166H HHB, FA BN, 155-MM, TOWED/203-MM, SP, INF DIV

1. MISSION

To direct and coordinate operations of the battalion and to provide facilities with which the battalion commander controls the battalion.

2. ASSIGNMENT

Organic to field artillery battalion, 155-mm, towed/203-mm, self-propelled, infantry division, TOE 6-165H.

3. CAPABILITIES

a. Plans, supervises, coordinates, and controls operations of organic units of the battalion.

b. Provides unit-level medical services, to include medical care and intrabattalion evacuation, establishes an aid station, furnishes aidmen to organic units of the battalion, and supervises field sanitation within the battalion.

c. Provides survey control for the battalion.

d. Provides air defense against low-altitude hostile aircraft.

e. Provides its portion of the battalion communication system.

4. MOBILITY

One hundred-percent mobile in organic vehicles.

TOE 6-167H FA BTRY, 155-MM, TOWED, FA BN, 155-MM, TOWED/203-MM, SP, INF DIV

1. MISSION

To provide a firing component of the field artillery battalion, 155-mm, towed/203-mm, self-propelled.

2. ASSIGNMENT

Organic to field artillery battalion, 155-mm, towed/203-mm, self-propelled, infantry division, TOE 6-165H.

3. CAPABILITIES

a. Delivers 155-mm fires at time and place required.

b. Transports its portion of the battalion basic load of ammunition.

c. Furnishes its portion of the battalion communication system.

d. Performs organizational-level maintenance on organic equipment, except for field radio equipment, computer gun direction, and battalion-level maintenance on automotive equipment.

4. MOBILITY

One hundred-percent mobile in organic vehicles.

Figure 1–12—Continued

TOE 6-358H FA BTRY, 203-MM, SP, FA BN, 155-MM, TOWED/203-MM, SP, INF DIV

1. MISSION

To provide a firing component of the field artillery battalion to which assigned.

2. ASSIGNMENT

Organic to field artillery battalion, 155-mm, towed/203-mm, self-propelled, infantry division, TOE 6-165H.

3. CAPABILITIES

a. Delivers 203-mm fires at time and place required.

b. Transports its portion of the battalion basic load of ammunition.

c. Furnishes its portion of the battalion communication system.

d. Performs organizational-level maintenance on organic equipment, except for field radio equipment, computer gun direction, and battalion-level maintenance on automotive equipment.

4. MOBILITY

One hundred-percent mobile in organic vehicles.

TOE 6-169H SVC BTRY, FA BN, 155-MM, TOWED/203-MM, SP, INF DIV

1. MISSION

To procure and distribute all classes of supplies to units of the battalion, to maintain appropriate supply records, and to perform organizational maintenance not otherwise accomplished within the battalion.

2. ASSIGNMENT

Organic to field artillery battalion, 155-mm, towed/203-mm, self-propelled, infantry division, TOE 6-165H.

3. CAPABILITIES

a. Procures and distributes all classes of supplies to the battalion.

b. Maintains appropriate supply records.

c. Provides battalion-level organizational maintenance support on automotive equipment.

d. Transports its portion of the battalion basic load of ammunition.

e. Performs organizational-level maintenance on organic equipment, except for field radio equipment.

4. MOBILITY

One hundred-percent mobile in organic vehicles.

Figure 1–12—Continued

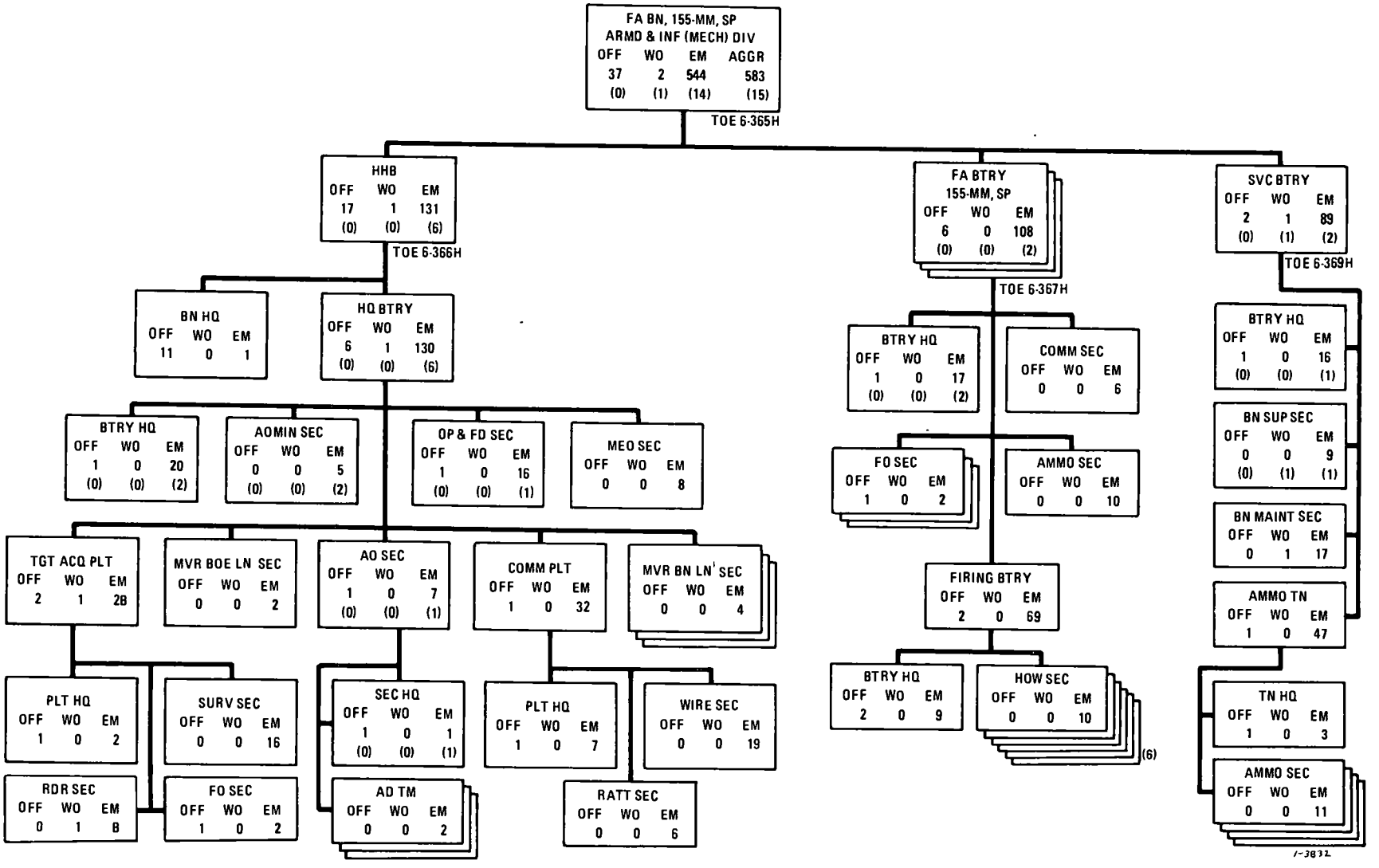

Figure 1–13. Field artillery battalion, 155-mm, self-propelled, armored and infantry (mechanized) divisions.

1. MISSION

To provide field artillery fires in direct support of a maneuver brigade (tank or mechanized), or in general support of the supported force, and to reinforce the fires of other field artillery units.

2. ASSIGNMENT

Organic to division artillery, armored or infantry (mechanized) division, TOE 6-300H.

3. CAPABILITIES

a. Provides continuous and timely field artillery fires in support of the supported unit.

b. Provides its component of division artillery communication, air defense, survey, and target acquisition systems.

c. Provides unit-level medical services for organic units, to include medical care and intrabattalion evacuation.

d. Transports its prescribed basic load of ammunition.

e. Provides liaison and forward observer sections to support one maneuver brigade with up to three maneuver battalions.

f. Procures and distributes all classes of supplies to organic units and maintains appropriate supply and materiel records.

4. MOBILITY

One hundred-percent mobile in organic vehicles.

TOE 6-366H HHB, FA BN, 155-MM, SP, ARMD AND INF (MECH) DIV

1. MISSION

To direct and coordinate operations of the battalion and to provide facilities with which the battalion commander controls the battalion.

2. ASSIGNMENT

Organic to field artillery battalion, 155-mm, self-propelled, armored or infantry (mechanized) division, TOE 6-365H.

3. CAPABILITIES

a. Provides the facilities with which the battalion commander controls the battalion.

b. Plans, supervises, coordinates, and controls operations of organic units of the battalion.

c. Provides unit-level medical services, to include medical care and intrabattalion evacuation, establishes an aid station, furnishes aidmen to organic units of the battalion, and supervises field sanitation within the battalion.

d. Provides survey control and its portion of the battalion communication system.

e. Provides air defense against low-altitude hostile aircraft.

f. Furnishes one forward observer section, as required.

g. Performs organizational maintenance on organic equipment, except for battalion-level maintenance on automotive equipment.

h. Performs organizational maintenance, except for operator maintenance, on communication-electronic and computer gun direction equipment for units of the battalion.

4. MOBILITY

One hundred-percent mobile in organic vehicles.

Figure 1-13—Continued

TOE 6-367H FA BTRY, 155-MM, SP, FA BN, 155-MM, SP, ARMD AND INF (MECH) DIV

1. MISSION

To provide a firing component of the field artillery battalion, 155-mm, self-propelled.

2. ASSIGNMENT

Organic to field artillery battalion, 155-mm, self-propelled, armored or infantry (mechanized) division, TOE 6-365H.

3. CAPABILITIES

a. Delivers 155-mm fires at time and place required.

b. Furnishes its portion of the battalion communication system.

c. Performs organizational-level maintenance on organic equipment, except for field communication equipment, computer gun direction, and battalion-level maintenance on automotive equipment.

d. Transports its portion of the battalion basic load of ammunition.

e. Provides forward observer sections to support one maneuver battalion with three maneuver companies.

4. MOBILITY

One hundred-percent mobile in organic vehicles.

TOE 6-369H SVC BTRY, FA BN, 155-MM, SP, ARMD AND INF (MECH) DIV

1. MISSION

To procure and distribute all classes of supplies to units of the battalion, to maintain appropriate supply records, and to perform organizational-level maintenance not otherwise accomplished within the battalion.

2. ASSIGNMENT

Organic to field artillery battalion, 155-mm, self-propelled, armored or infantry (mechanized) division, TOE 6-365H.

3. CAPABILITIES

a. Procures and distributes all classes of supplies to units of the battalion.

b. Maintains appropriate supply records.

c. Provides battalion-level organizational maintenance support for automotive equipment.

d. Transports its portion of the battalion basic load of ammunition.

e. Performs organizational-level maintenance on organic equipment, except for field radio equipment.

4. MOBILITY

One hundred-percent mobile in organic vehicles.

Figure 1–13—Continued

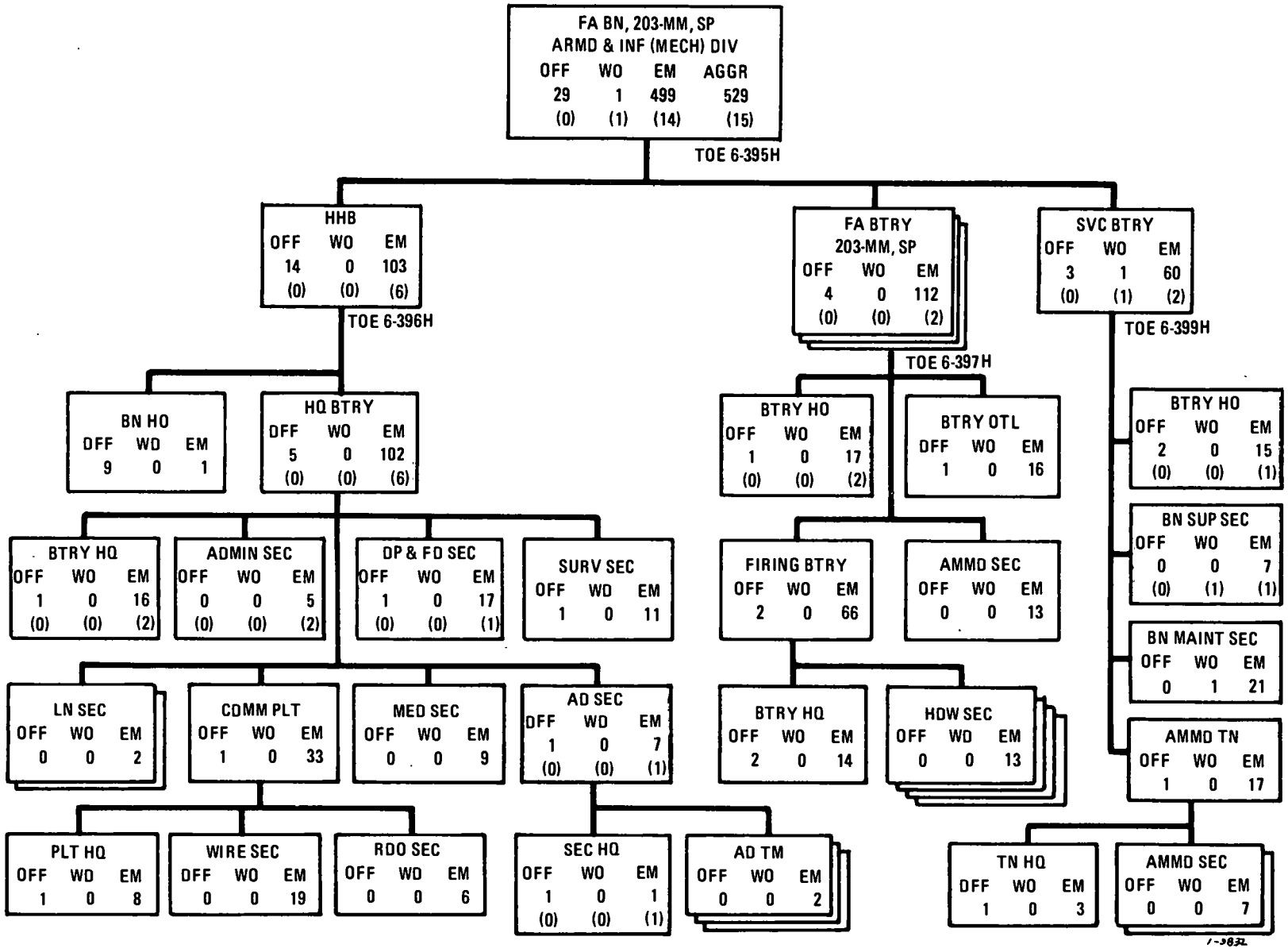

Figure 1–14. Field artillery battalion, 203-mm, self-propelled, armored and infantry (mechanized) divisions.

TOE 6-395H FA BN, 203-MM, SP, ARMD AND INF (MECH) DIV

1. MISSION

To provide field artillery fires, including nuclear, in general support of an armored division or infantry division (mechanized) and to reinforce the fires of other field artillery units.

2. ASSIGNMENT

Organic to field artillery battalion, 203-mm, self-propelled, armored or TOE 6-300H.

3. CAPABILITIES

a. Provides continuous and timely fire support to the supported force, to include nuclear fires.

b. Provides its component of division artillery communication, survey, air defense, and target acquisition systems.

c. Provides medical services for organic units, to include medical care and intrabattalion evacuation.

d. Procures and distributes all classes of supplies to organic units, maintains appropriate supply and materiel records, and transports its prescribed basic load of ammunition.

4. MOBILITY

One hundred-percent mobile in organic vehicles.

TOE 6-396H HHB, FA BN, 203-MM, SP, ARMD AND INF (MECH) DIV

1. MISSION

To direct and coordinate operations of the battalion and to provide facilities with which the battalion commander controls the battalion.

2. ASSIGNMENT

Organic to field artillery battalion, 203-mm, self-propelled, armored or infantry (mechanized) division, TOE 6-395H.

3. CAPABILITIES

a. Plans, supervises, coordinates, and controls operations of organic units of the battalion.

b. Provides unit-level medical services, to include medical care and intrabattalion evacuation, establishes an aid station, furnishes aidmen to organic units of the battalion, and supervises field sanitation within the battalion.

c. Provides survey control for the battalion.

d. Provides air defense against low-altitude hostile aircraft.

e. Provides its portion of the battalion communication system.

f. Performs organizational maintenance on organic equipment, except for battalion-level maintenance on automotive equipment.

4. MOBILITY

One hundred-percent mobile in organic vehicles.

Figure 1–14—Continued

1. MISSION

To provide a firing component of the field artillery battalion, 203-mm, self-propelled.

2. ASSIGNMENT

Organic to field artillery battalion, 203-mm, self-propelled, armored or infantry (mechanized) division, TOE 6-395H.

3. CAPABILITIES

a. Delivers 203-mm fires, to include nuclear fires, at time and place required.

b. Furnishes survey control and its portion of the battalion communication system.

c. Performs organizational-level maintenance on organic equipment, except for field radio equipment, computer gun direction, and battalion-level maintenance on automotive equipment.

d. Transports its portion of the battalion basic load of ammunition.

4. MOBILITY

One hundred-percent mobile in organic vehicles.

TOE 6-399H SVC BTRY, FA BN, 203-MM, SP, ARMD AND INF (MECH) DIV

1. MISSION

To procure and distribute all classes of supplies to units of the battalion, to maintain appropriate supply records, and to perform organizational maintenance functions not otherwise accomplished within the battalion.

2. ASSIGNMENT

Organic to field artillery battalion, 203-mm, self-propelled, armored or infantry (mechanized) division, TOE 6-395H.

3. CAPABILITIES

a. Procures and distributes all classes of supplies to units of the battalion.

b. Maintains appropriate supply records.

c. Provides battalion-level organizational maintenance for automotive equipment.

d. Transports its portion of the battalion basic load of ammunition.

e. Performs organizational maintenance on organic equipment, except for field radio equipment.

4. MOBILITY

One hundred-percent mobile in organic vehicles.

Figure 1-14—Continued

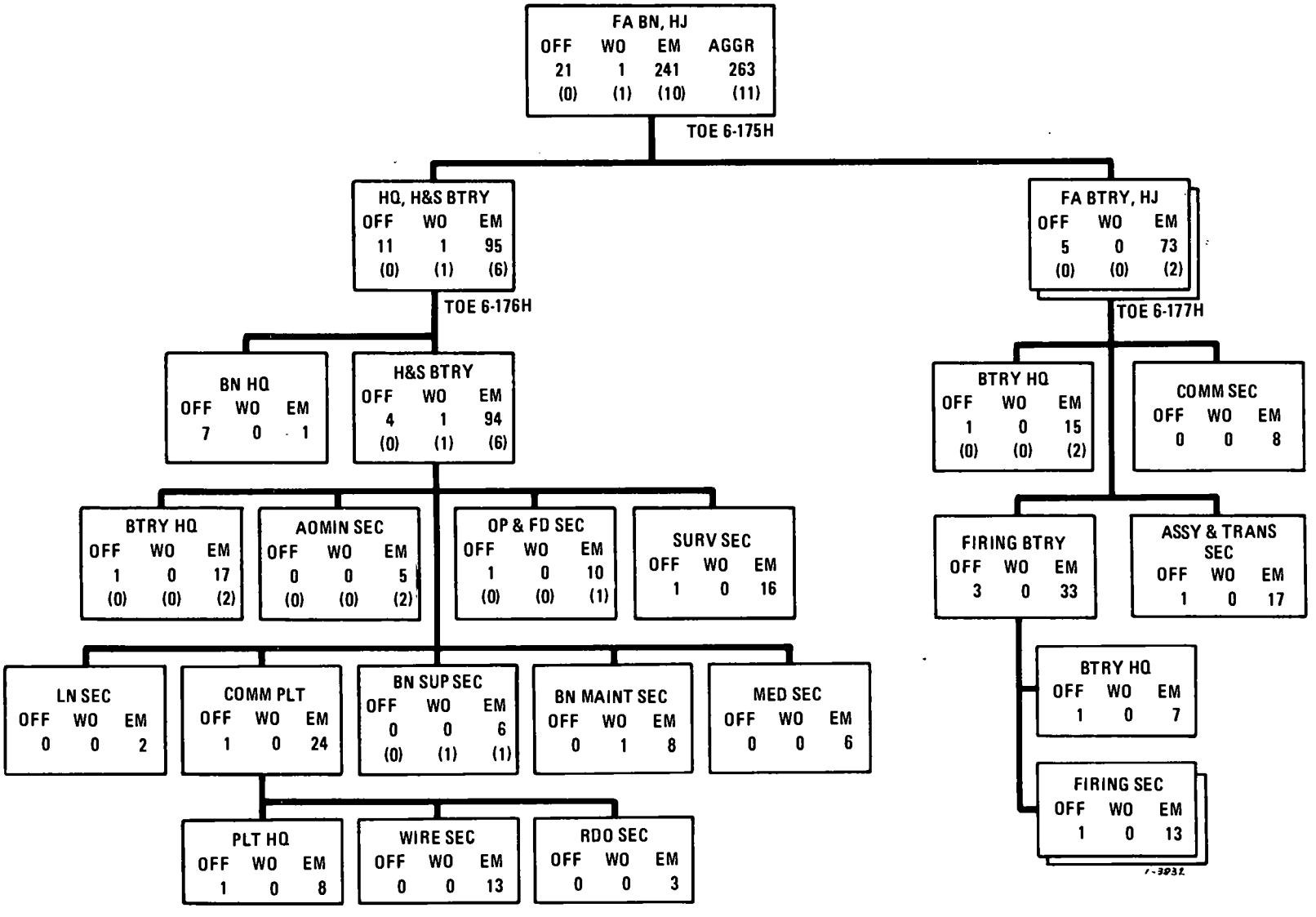

Figure 1–15. Field artillery battalion, Honest John, armored, infantry, and infantry (mechanized) divisions.

TOE 6-175H FA BN, HJ

1. MISSION

To provide long-range field artillery fires in general support of an armored, infantry, or infantry (mechanized) division.

2. ASSIGNMENT

a. Organic to division artillery, armored or infantry (mechanized) division, TOE 6-300H.

b. Organic to division artillery, infantry division, TOE 6-100H.

3. CAPABILITIES

a. Provides field artillery fire support, including nuclear, to the supported force.

b. Provides its component of the parent division artillery communication, survey, and fire control systems.

c. Provides medical services for organic units, to include medical care and intrabattalion evacuation.

d. Procures and distributes all classes of supplies to organic units, maintains appropriate supply and materiel records, transports its prescribed basic load of rockets, assembles the rockets, and performs the required checks and tests on the rocket motors and warheads.

4. MOBILITY

One hundred-percent mobile in organic vehicles.

TOE 6-176H HQ, H&S BTRY, FA BN, HJ

1. MISSION

To direct and coordinate operations of the battalion, to provide facilities with which the battalion commander controls the battalion, to procure and distribute all classes of supplies (except Honest John rockets) to units of the battalion, to maintain appropriate supply and materiel records, and to perform organizational-level maintenance functions not otherwise accomplished within the battalion.

2. ASSIGNMENT

Organic to field artillery battalion, Honest John, armored, infantry, or infantry (mechanized) division, TOE 6-175H.

3. CAPABILITIES

a. Plans, supervises, coordinates, and controls operations of organic units of the battalion.

b. Provides survey control for the battalion.

c. Procures and issues all classes of supplies (except Honest John rockets) to organic units of the battalion.

d. Provides unit-level medical services, including medical care and intrabattalion evacuation, establishes an aid station, furnishes aidmen to firing batteries, and supervises field sanitation within the battalion.

e. Maintains appropriate supply and materiel records.

f. Furnishes battalion-level automotive maintenance support to units of the battalion.

g. Furnishes maintenance support for computer, M18, and field communication equipment to units of the battalion.

4. MOBILITY

One hundred-percent mobile in organic vehicles.

TOE 6-177H FA BTRY, HJ, FA BN, HJ

1. MISSION

To provide a firing component of the field artillery battalion, Honest John.

2. ASSIGNMENT

Organic to field artillery battalion, Honest John, armored, infantry, or infantry (mechanized) division, TOE 6-175H.

3. CAPABILITIES

a. Delivers indirect artillery fires with a variety of warheads.

b. Furnishes its portion of the battalion communication system.

c. Draws, transports, stores, assembles, and tests Honest John rockets.

d. Performs organizational-level maintenance on organic equipment, except for communication equipment, computer gun direction, and battalion-level automotive maintenance.

4. MOBILITY

One hundred-percent mobile in organic vehicles.

Figure 1-15—Continued

Table 1-10. Summary of Equipment—Field Artillery Battalion, 155-mm, Towed/203-mm, Self-Propelled, Infantry Division

1	2	3	4	5	6	7	8
LIN	Nomenclature	HHB (6-166H)	3 FA btry 155-mm, towed (6-167H) (1)	(3)	FA btry 8-in., SP (6-358H)	Svc btry (6-169H)	Bn total (6-165H)
	CLASS 7B—GROUND SUPPORT						
1 E69242	COMP RCP DRVN+ AIR REC GAS DRVN 15 CFM 175 PSI.	0	0	0	0	1	1
2 E70064	COMP RCP PWR DRVN+ TRK 2 WHL PNEU TIRES GAS DRVN 5 CFM 175 PSI.	1	1	3	1	1	6
3 J43918	GEN ST GAS ENG+ 1.5KW 60CY 1PH 2 WIRE AC 120V SHOCK.	1	1	3	0	2	6
4 J44055	GEN ST GAS ENG+ 1.5KW DC 28V SHOCK.	2	0	0	0	0	2
	CLASS 7G—ELECTRONICS						
5 Q34308	RADIO SET AN/GRC-160	4	0	0	0	0	4
6 Q38299	RADIO SET+AN/PRC-77	6	0	0	0	0	6
7 Q53001	RADIO SET AN/VRC-46	9	3	9	3	3	24
8 Q54154	RADIO SET AN/VRC-47	3	1	3	1	0	7
9 Q55114	RADIO SET AN/VRC-49	2	0	0	0	0	2
10 Q56783	RADIO SET AN/VRC-64	1	0	0	0	1	2
11 Q90120	RADIO TELETYPEWRITER SET+ AN/GRC-142 LESS POWER.	2	0	0	0	0	2
12 U81707	SWITCHBOARD TELEPHONE MANUAL+ SB-22/PT.	3	1	3	1	1	8
13 U82529	SWITCHBOARD TELEPHONE MANUAL+ SB-993/GT.	0	1	3	1	0	4
14 V30252	TELEPHONE SET+ TA-1/PT	8	0	0	0	0	8
15 V30937	TELEPHONE SET+ TA-264/PT	1	0	0	0	0	1
16 V31211	TELEPHONE SET+ TA-312/PT	30	17	51	15	9	105
	CLASS 7K—TACTICAL VEHICLES						
17 D11538	CARRIER COMMAND POST+ LIGHT TRACKED.	0	0	0	2	0	2
18 W94030	TRAILER AMMUNITION+ 1-1/2 TON 2 WHEEL W/E.	0	4	12	6	10	28
19 W95400	TRAILER CARGO+ 1/4 TON 2 WHEEL W/E.	9	1	3	1	1	14
20 W95537	TRAILER CARGO+ 3/4 TON 2 WHEEL W/E.	12	3	9	1	1	23
21 W95811	TRAILER CARGO+ 1-1/2 TON 2 WHEEL W/E.	2	1	3	3	8	16
22 W98825	TRAILER TANK+ WATER 400 GALLON 1-1/2 TON 2 WHEEL W/E.	1	1	3	1	1	6
23 X38776	TRUCK AMBULANCE+ 3/4 TON 4×4 W/E.	1	0	0	0	0	1
24 X39735	TRUCK CARGO+ 3/4 TON 4×4 W/E	14	2	6	0	2	22
25 X39872	TRUCK CARGO+ 3/4 TON 4×4 W/WINCH W/E.	6	2	6	2	0	14
26 X40009	TRUCK CARGO+ 2-1/2 TON 6×6 W/E	2	2	6	2	5	15
27 X40146	TRUCK CARGO+ 2-1/2 TON 6×6 W/WINCH W/E.	1	1	3	1	3	8
28 X40968	TRUCK CARGO+ 5 TON 6×6 LWB W/WINCH W/E.	0	10	30	6	12	48
29 X60833	TRUCK UTILITY+ 1/4 TON 4×4 W/E.	16	2	6	2	3	27
30 X62340	TRUCK VAN+ SHOP 2-1/2 TON 6×6 W/E.	1	0	0	2	0	3

Table 1-10. Summary of Equipment—Field Artillery Battalion, 155-mm, Towed/203-mm, Self-Propelled, Infantry Division—Continued

1	2	3	4	5	6	7	8
LIN	Nomenclature	HHB (6-166H)	3 FA btry 155-mm, towed (6-167H) (1)	(3)	FA btry 8-in., SP (6-358H)	Svc btry (6-169H)	Bn total (6-165H)
31 X63299	TRUCK WRECKER+ 5 TON 6×6 W/WINCH W/E.	0	0	0	0	1	1
	CLASS 7M—WEAPONS						
32 G02204	DETECTING SET MINE+ PTBL METALLIC AND NONMETALLIC.	1	1	3	1	1	6
33 G02341	DETECTING SET MINE+ PTBL METALLIC.	1	1	3	1	1	6
34 K56981	HOWITZER HEAVY SELF PROPELLED+ 8 INCH.	0	0	0	4	0	4
35 K57803	HOWIZTER MEDIUM TOWED+ 155 MILLIMETER.	0	6	18	0	0	18
36 L92386	MACHINE GUN 7.62 MILLIMETER+ LIGHT FLEXIBLE.	5	8	24	8	4	41
37 M75714	MOUNT TRIPID MACHINE GUN+ 7.62 MILLIMETER.	5	8	24	8	4	41
38 N96741	PISTOL CALIBER .45 AUTOMATIC+---	13	1	3	1	1	18
39 R50543	RECOVERY VEHICLE FULL TRACKED+ LIGHT ARMORED.	0	0	0	0	1	1
40 R94977	RIFLE 5.56 MILLIMETER+ W/E------	121 (6)	109 (3)	327 (9)	110 (3)	64 (5)	622 (23)
	CLASS 7Q—GENERAL EQUIPMENT						
41 V12141	TANK AND PUMP UNIT LIQUID DISPENSING TRUCKMOUNTING+.	0	0	0	0	2	2
42 V19950	TANK UNIT LIQUID DISPENSING TRAILER MOUNTING+.	0	0	0	0	2	2

Table 1-11. Summary of Equipment—Field Artillery Battalion, 155-mm, Self-Propelled, Armored and Infantry (Mechanized) Divisions

1	2	3	4	5	6	7
LIN	Nomenclature	HHB (6-366H)	3 FA btry 155-mm, SP (6-367H) (1)	(3)	Svc btry (6-369H)	Bn total (6-365H)
	CLASS 7B—GROUND SUPPORT					
1 E69242	COMP RCP PWR DRVN+ AIR REC GAS DRVN 15 CFM 175 PSI.	0	0	0	1	1
2 E70064	COMP RCP PWR DRVN+ TRK 2 WHL PNEU TIRES GAS DRVN 5 CFM 175 PSI	1	1	3	1	5
3 J41452	GENERATOR SET GASOLINE ENGINE TRAILER MTD+ PU-304 MPQ-4A.	1	0	0	0	1
4 J43918	GEN ST GAS ENG+ 1.5KW 60CY 1PH 2 WIRE AC 120V SHOCK.	0	1	3	3	6
5 J44055	GEN ST GAS ENG+ 1.5KW DC 28V SHOCK------	1	0	0	0	1
	CLASS 7G—ELECTRONICS					
6 Q15414	RADAR SET+ AN/MPQ-4 LESS POWER----------	1	0	0	0	1
7 Q34308	RADIO SET AN/GRC-160----------	6	3	9	0	15

Table 1-11. Summary of Equipment—Field Artillery Battalion, 155-mm, Self-Propelled, Armored and Infantry (Mechanized) Divisions—Continued

1	2		3	4	5	6	7
	LIN	Nomenclature	HHB (6-366H)	3 FA btry 155-mm. SP (6-367H)		Svc btry (6-369H)	Bn total (6-365H)
				(1)	(3)		
8	Q38299	RADIO SET+AN/PRC-77	5	0	0	0	5
9	Q53001	RADIO SET AN/VRC-46	11	3	9	3	23
10	Q54154	RADIO SET AN/VRC-47	3	1	3	0	6
11	Q55114	RADIO SET AN/VRC-49	5	0	0	0	5
12	Q56783	RADIO SET AN/VRC-64	0	0	0	2	2
13	Q90120	RADIO TELETYPEWRITER SET+ AN/GRC-142 LESS POWER.	2	0	0	0	2
14	U81707	SWITCHBOARD TELEPHONE MANUAL+ SB-22/PT.	3	1	3	1	7
15	U82529	SWITCHBOARD TELEPHONE MANUAL+ SB-993/GT.	4	1	3	0	7
16	V30252	TELEPHONE SET+ TA-1/PT	6	0	0	0	6
17	V30937	TELEPHONE SET+ TA-264/PT	1	0	0	0	1
18	V31211	TELEPHONE SET+ TA-312/PT	39	23	69	9	117
		CLASS 7K—TACTICAL VEHICLES					
19	D11538	CARRIER COMMAND POST+ LIGHT TRACKED.	7	1	3	0	10
20	W94030	TRAILER AMMUNITION+ 1-1/2 TON 2 WHEEL W/E.	0	3	9	20	29
21	W95400	TRAILER CARGO+ 1/4 TON 2 WHEEL W/E	11	3	9	1	21
22	W95537	TRAILER CARGO+ 3/4 TON 2 WHEEL W/E	9	1	3	2	14
23	W95811	TRAILER CARGO+ 1-1/2 TON 2 WHEEL W/E	1	1	3	7	11
24	W98825	TRAILER TANK+ WATER 400 GALLON 1-1/2 TON 2 WHEEL W/E.	1	1	3	1	5
25	X38776	TRUCK AMBULANCE+ 3/4 TON 4×4 W/E	1	0	0	0	1
26	X39735	TRUCK CARGO+ 3/4 TON 4×4 W/E	11	1	3	3	17
27	X39872	TRUCK CARGO+ 3/4 TON 4×4 W/WINCH W/E.	5	2	6	0	11
28	X40009	TRUCK CARGO+ 2-1/2 TON 6×6 W/E	3	2	6	4	13
29	X40146	TRUCK CARGO+ 2-1/2 TON 6×6 W/WINCH W/E.	1	1	3	3	7
30	X40831	TRUCK CARGO+ 5 TON 6×6 LWB W/E	0	0	0	16	16
31	X40968	TRUCK CARGO+ 5 TON 6×6 LWB W/WINCH W/E.	0	3	9	6	15
32	X60833	TRUCK UTILITY+ 1/4 TON 4×4 W/E	19	4	12	2	33
33	X62340	TRUCK VAN+ SHOP 2-1/2 TON 6×6 W/E	1	0	0	0	1
34	X63299	TRUCK WRECKER+ 5 TON 6×6 W/WINCH W/E.	0	0	0	1	1
		CLASS 7M—WEAPONS					
35	G02204	DETECTING SET MINE+ PTBL METALLIC AND NONMETALLIC.	1	1	3	1	5
36	G02341	DETECTING SET MINE+ PTBL METALLIC	1	1	3	1	5
37	K57666	HOWITZER MEDIUM SELF PROPELLED+ 155MM.	0	6	18	0	18
38	L92386	MACHINE GUN 7.62 MILLIMETER+ LIGHT FLEXIBLE.	8	6	18	7	33
39	M75714	MOUNT TRIPOD MACHINE GUN+ 7.62 MILLIMETER.	8	6	18	7	33
40	N96741	PISTOL CALIBER .45 AUTOMATIC+	11	1	3	1	15
41	R50543	RECOVERY VEHICLE FULL TRACKED+LIGHT ARMORED.	0	0	0	2	2
42	R94977	RIFLE 5.56 MILLIMETER+ W/E	137(6)	113(2)	339(6)	92(3)	568(15)

Table 1-11. Summary of Equipment—Field Artillery Battalion, 155-mm, Self-Propelled, Armored and Infantry (Mechanized) Divisions—Continued

1	2	3	4	5	6	7
LIN	Nomenclature	HHB (6-366H)	3 FA btry 155-mm, SP (6-367H)		Svc btry (6-369H)	Bn total (6-365H)
			(1)	(3)		
	CLASS 7Q—GENERAL EQUIPMENT					
43 V12141	TANK AND PUMP UNIT LIQUID DISPENSING TRUCKMOUNTING+.	0	0	0	2	2
44 V19950	TANK UNIT LIQUID DISPENSING TRAILER MOUNTING+.	0	0	0	2	2

Table 1-12. Summary of Equipment—Field Artillery Battalion, 203-mm, Self-Propelled, Armored and Infantry (Mechanized) Divisions

1	2	3	4	5	6	7
LIN	Nomenclature	HHB (6-396H)	3 FA btry 8-in., SP (6-397H)		Svc btry (6-399H)	Bn total (6-395H)
			(1)	(3)		
	CLASS 7B—GROUND SUPPORT					
1 E69242	COMP RCP PWR DRVN+ AIR REC GAS DRVN 15 CFM 175 PSI.	0	0	0	1	1
2 E70064	COMP RCP PWR DRVN+ TRK 2 WHL PNEU TIRES GAS DRVN 5 CFM 175 PSI.	1	1	3	1	5
3 J43918	GEN ST GAS ENG+ 1.5KW 60CY 1PH 2 WIRE AC 120V SHOCK.	1	1	3	2	6
4 J44055	GEN ST GAS ENG+ 1.5KW DC 28V SHOCK	2	0	0	0	2
	CLASS 7G—ELECTRONICS					
5 Q34308	RADIO SET AN/GRC-160	3	0	0	0	3
6 Q38299	RADIO SET+ AN/PRC-77	3	2	6	0	9
7 Q53001	RADIO SET AN/VRC-46	9	4	12	3	24
8 Q54154	RADIO SET AN/VRC-47	3	1	3	0	6
9 Q55114	RADIO SET AN/VRC-49	2	0	0	0	2
10 Q56783	RADIO SET AN/VRC-64	1	0	0	2	3
11 Q90120	RADIO TELETYPEWRITER SET+ AN/GRC-142 LESS POWER.	2	1	3	0	5
12 U81707	SWITCHBOARD TELEPHONE MANUAL+ SB-22/PT.	3	1	3	1	7
13 U82529	SWITCHBOARD TELEPHONE MANUAL+ SB-993/GT.	0	1	3	0	3
14 V30252	TELEPHONE SET+ TA-1/PT	6	0	0	0	6
15 V30937	TELEPHONE SET+ TA-264/PT	1	0	0	0	1
16 V31211	TELEPHONE SET+ TA-312/PT	31	16	48	9	88
	CLASS 7K—TACTICAL VEHICLES					
17 D11538	CARRIER COMMAND POST+ LIGHT TRACKED	2	1	3	0	5
18 W94030	TRAILER AMMUNITION+ 1-1/2 TON 2 WHEEL W/E.	0	4	12	4	16
19 W95400	TRAILER CARGO+ 1/4 TON 2 WHEEL W/E	7	1	3	0	10
20 W95537	TRAILER CARGO+ 3/4 TON 2 WHEEL W/E	10	2	6	2	18
21 W95811	TRAILER CARGO+ 1-1/2 TON 2 WHEEL W/E	1	3	9	8	18

Table 1-12. Summary of Equipment—Field Artillery Battalion, 203-mm, Self-Propelled, Armored and Infantry (Mechanized) Divisions—Continued

1	2	3	4	5	6	7
LIN	Nomenclature	HHB (6-396H)	3 FA btry 8-in., SP (6-397H)		Svc btry (6-399H)	Bn total (6-395H)
			(1)	(3)		
22 W98825	TRAILER TANK + WATER 400 GALLON 1-1/2 TON 2 WHEEL W/E.	1	1	3	1	5
23 X38776	TRUCK AMBULANCE + 3/4 TON 4×4 WE	1	0	0	0	1
24 X39735	TRUCK CARGO + 3/4 TON 4×4 W/E	13	3	9	3	25
25 X39872	TRUCK CARGO + 3/4 TON 4×4 W/WINCH W/E	4	2	6	0	10
26 X40009	TRUCK CARGO + 2-1/2 TON 6×6 W/E	2	2	6	2	10
27 X40146	TRUCK CARGO + 2-1/2 TON 6×6 W/WINCH W/E	0	0	0	5	5
28 X40968	TRUCK CARGO + 5 TON 6×6 LWB W/WINCH W/E.	1	5	15	7	23
29 X60833	TRUCK UTILITY + 1/4 TON 4×4 W/E	15	3	9	3	27
30 X62340	TRUCK VAN + SHOP 2-1/2 TON 6×6 W/E	0	2	6	0	6
31 X63299	TRUCK WRECKER + 5 TON 6×6 W/WINCH W/E	0	0	0	1	1
	CLASS 7M—WEAPONS					
32 G02204	DETECTING SET MINE + PTBL METALLIC AND NONMETALLIC.	1	1	3	1	5
33 G02342	DETECTING SET MINE + PTBL METALLIC	1	1	3	1	5
34 K56981	HOWITZER HEAVY SELF PROPELLED + 8 INCH	0	4	12	0	12
35 L92386	MACHINE GUN 7.62 MILLIMETER + LIGHT FLEXIBLE.	4	9	27	6	37
36 M75714	MOUNT TRIPOD MACHINE GUN + 7.62 MILLIMETER.	4	9	27	6	37
37 N96741	PISTOL CALIBER .45 AUTOMATIC +	11	1	3	1	15
38 R50543	RECOVERY VEHICLE FULL TRACKED + LIGHT ARMORED.	0	0	0	2	2
39 R50680	RECOVERY VEHICLE FULL TRACKED + MEDIUM.	0	0	0	1	1
40 R94977	RIFLE 5.56 MILLIMETER + W/E	105 (6)	115 (2)	345 (6)	64 (3)	514 (15)
	CLASS 7Q—GENERAL EQUIPMENT					
41 V12141	TANK AND PUMP UNIT LIQUID DISPENSING TRUCKMOUNTING +.	0	0	0	2	2
42 V19950	TANK UNIT LIQUID DISPENSING TRAILER MOUNTING +.	0	0	0	2	2

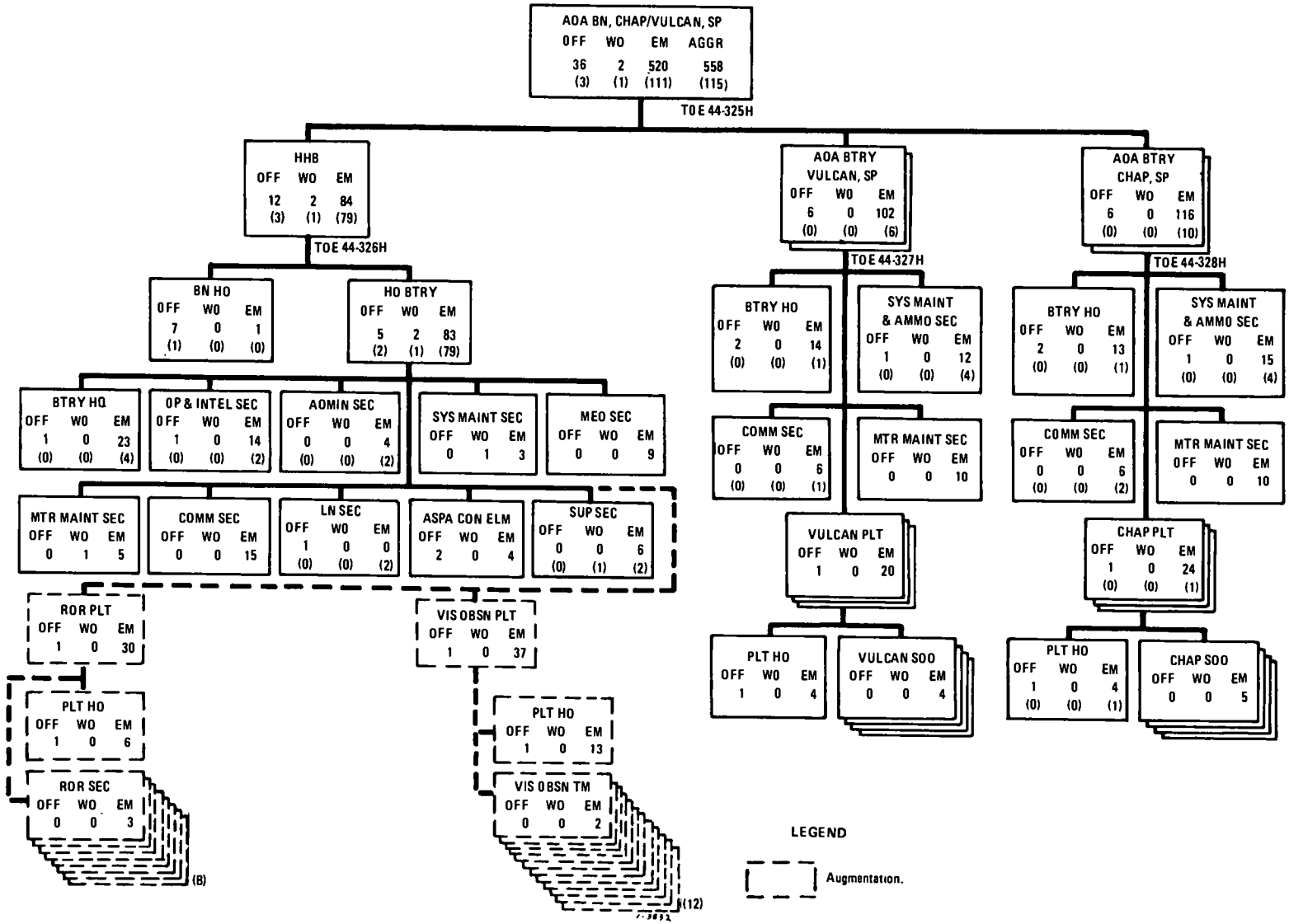

Figure 1–16. Air Defense artillery battalion, Chaparral/Vulcan, self-propelled, armored, infantry, and infantry (mechanized) divisions.

TOE 44-325H ADA BN, CHAP/VULCAN, SP

1. MISSION

To provide air defense for forward combat elements against low-altitude hostile aircraft and to destroy hostile targets on land or water, as required.

2. ASSIGNMENT

a. Organic to armored division, TOE 17H.

b. Organic to infantry division, TOE 7H.

c. Organic to infantry division (mechanized), TOE 37H.

3. CAPABILITIES

a. Provides vital area and area air defense against low-altitude hostile aircraft.

b. Defends against surface targets with the Vulcan weapon system.

c. Has forward area alert radar capability, when augmented.

d. Provides medical services, to include emergency medical treatment, operation of the battalion aid station, evacuation of casualties, provision of aidmen to firing batteries, and supervision of sanitation.

e. Performs organizational maintenance on organic equipment.

4. MOBILITY

One hundred-percent mobile in organic vehicles.

TOE 44-326H HHB, ADA BN, CHAP/VULCAN, SP

1. MISSION

To provide command, control, and supervision of operations of the battalion.

2. ASSIGNMENT

Organic to air defense artillery battalion, Chaparral/Vulcan, self-propelled, TOE 44-325H.

3. CAPABILITIES

a. Commands, controls, and provides staff planning and supervision of operations.

b. Provides radio and wire communications with all elements of the battalion and with higher, adjacent, and supported units.

c. Provides forward area alert radar capability, when augmented.

d. Performs supply, administration, and organizational maintenance on all battery equipment.

e. Provides liaison with the division tactical operations center and air defense artillery group or air defense artillery battalion, Hawk.

f. Provides medical services, to include emergency medical treatment, operation of the battalion aid station, evacuation of casualties, provision of aidmen to firing batteries, and supervision of sanitation.

4. MOBILITY

One hundred-percent mobile in organic vehicles.

Figure 1–16—Continued

TOE 44-327H ADA BTRY, VULCAN, SP, ADA BN, CHAP/VULCAN, SP

1. MISSION

a. To provide air defense of critical areas for forward combat elements or installations against low-altitude hostile aircraft.

b. To destroy hostile targets on land or water, as required.

c. To provide Vulcan fire units to air defense artillery battalion, Chaparral/Vulcan, self-propelled.

2. ASSIGNMENT

Organic to air defense artillery battalion, Chaparral/Vulcan, self-propelled, TOE 44-325H.

3. CAPABILITIES

a. Delivers a high rate of fire from hasty positions and on the move against low-altitude hostile aircraft and surface targets.

b. Stores and transports its basic load of ammunition.

c. Performs organizational maintenance on organic equipment.

d. Delivers a high rate of fire against hostile land targets during periods of darkness.

4. MOBILITY

One hundred-percent mobile in organic vehicles.

TOE 44-328H ADA BTRY, CHAP, SP, ADA BN, CHAP/VULCAN, SP

1. MISSION

a. To provide air defense for forward combat elements, areas, or installations against low-altitude hostile aircraft.

b. To provide Chaparral fire units to air defense artillery battalion, Chaparral/Vulcan, self-propelled.

2. ASSIGNMENT

Organic to air defense artillery battalion, Chaparral/Vulcan, self-propelled, TOE 44-325H.

3. CAPABILITIES

a. Delivers fire from hasty positions against low-altitude hostile aircraft.

b. Inspects, assembles, tests, and maintains missiles.

c. Stores and transports its basic load of missiles.

d. Performs organizational maintenance on organic equipment.

4. MOBILITY

One hundred-percent mobile in organic vehicles.

Figure 1–16—Continued

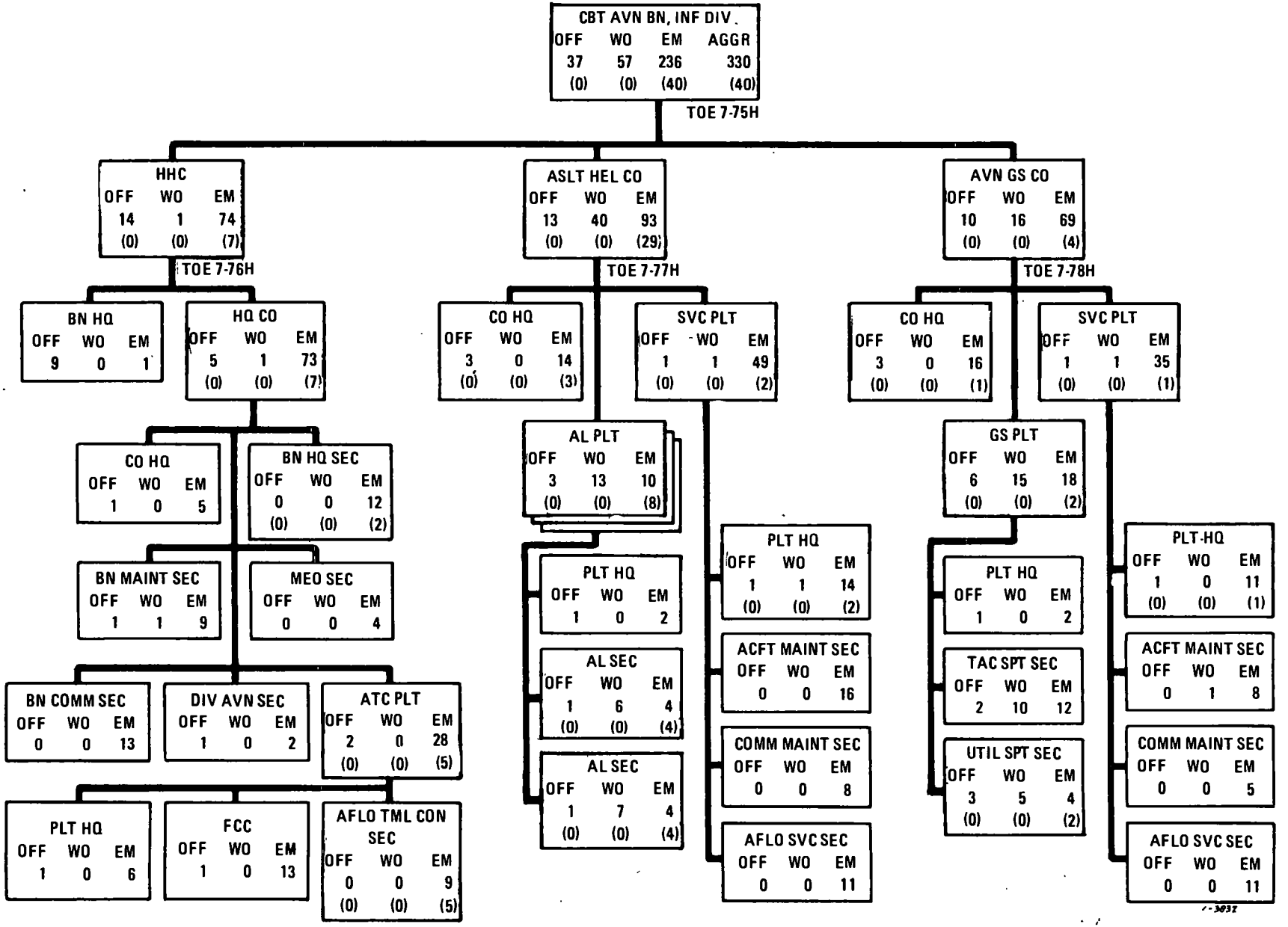

Figure 1–17. Combat aviation battalion, infantry division.

TOE 7-75H CBT AVN BN, INF DIV

1. MISSION

To provide aviation support for division HQ, DISCOM, and other divisional units without organic aircraft. In addition, to provide–

a. General support and reinforcement to units possessing organic aircraft.

b. An aviation special staff section for division HQ.

2. ASSIGNMENT

Organic to infantry division, TOE 7H.

3. CAPABILITIES

a. Commands, controls, performs staff planning, and furnishes communications and supervision of operations for companies of the battalion and attached units.

b. Provides aviation special staff personnel for division HQ.

c. Provides air messenger service, aerial radio relay, and field wire-laying service by aircraft, as required by division HQ.

d. Participates in airmobile combat operations. One dismounted infantry company can be airlifted in one airlift, using organic aircraft.

e. Operates one instrumented airfield with terminal flight facilities, including ground controlled approach.

f. Provides aircraft to support division HQ, DISCOM, and other units without organic aircraft.

g. Provides aircraft for general support and reinforcement to units with organic aircraft.

h. Augments aeromedical evacuation.

i. Provides en route air traffic control of aircraft operating under instrument flight rules within the division area.

j. Performs organizational maintenance on organic equipment.

4. MOBILITY

One hundred-percent mobile, utilizing air and ground vehicles.

TOE 7-76H HHC, CBT AVN BN, INF DIV

1. MISSION

To provide command, control, administration, battalion-level organizational maintenance, communications, and supply for the aviation battalion. In addition, to provide aviation special staff personnel for division HQ.

2. ASSIGNMENT

Organic to combat aviation battalion, infantry division, TOE 7-75H.

3. CAPABILITIES

a. Commands, controls, performs staff planning, and furnishes communications and supervision of operations for companies of the battalion and attached units.

b. Provides aviation special staff personnel for division HQ.

c. Provides personnel to supervise battalion supply, organizational maintenance, and administration for organic and attached units.

d. Operates one instrumented airfield with terminal flight facilities, including ground controlled approach.

e. Provides unit-level medical service to the division base airfield and elements of the aviation battalion.

f. Provides en route air traffic control of aircraft operating under instrument flight rules within the division area.

g. Performs organizational maintenance on organic equipment.

4. MOBILITY

One hundred-percent mobile in organic surface vehicles.

Figure 1-17—Continued

TOE 7-77H ASLT HEL CO, CBT AVN BN, INF DIV

1. MISSION

To provide tactical air movement of combat troops, supplies, and equipment within the combat zone.

2. ASSIGNMENT

Organic to combat aviation battalion, infantry division, TOE 7-75H.

3. CAPABILITIES

a. Provides near continuous (day and night) operations during visual weather conditions and limited operations under instrument weather conditions in support of the force in the combat zone.

b. Provides, in a single lift, airlift for the assault elements of one infantry or dismounted infantry (mechanized) company.

c. Provides air movement of troops, supplies, and equipment within the combat zone.

d. Augments aeromedical evacuation.

e. Performs organizational maintenance on organic equipment.

4. MOBILITY

One hundred-percent mobile, utilizing air and ground vehicles.

TOE 7-78H AVN GS CO, CBT AVN BN, INF DIV

1. MISSION

To provide aviation support for division HQ, DISCOM, and other units without organic aircraft. In addition, to provide limited general support and reinforcement to units with organic aircraft.

2. ASSIGNMENT

Organic to combat aviation battalion, infantry division, TOE 7-75H.

3. CAPABILITIES

a. Provides near continuous operations during visual weather conditions and limited operations under instrument weather conditions.

b. Provides air observation, reconnaissance, and surveillance of enemy areas for locating, verifying, and evaluating targets; conducting terrain study; and plotting fire adjustment.

c. Provides battlefield illumination.

d. Conducts aerial radiological survey.

e. Provides command, control, liaison, or reconnaissance.

f. Augments aeromedical evacuation.

g. Provides mess facilities for HHC.

h. Performs organizational maintenance on organic equipment.

4. MOBILITY

One hundred-percent mobile, utilizing air and ground vehicles.

Figure 1–17—Continued

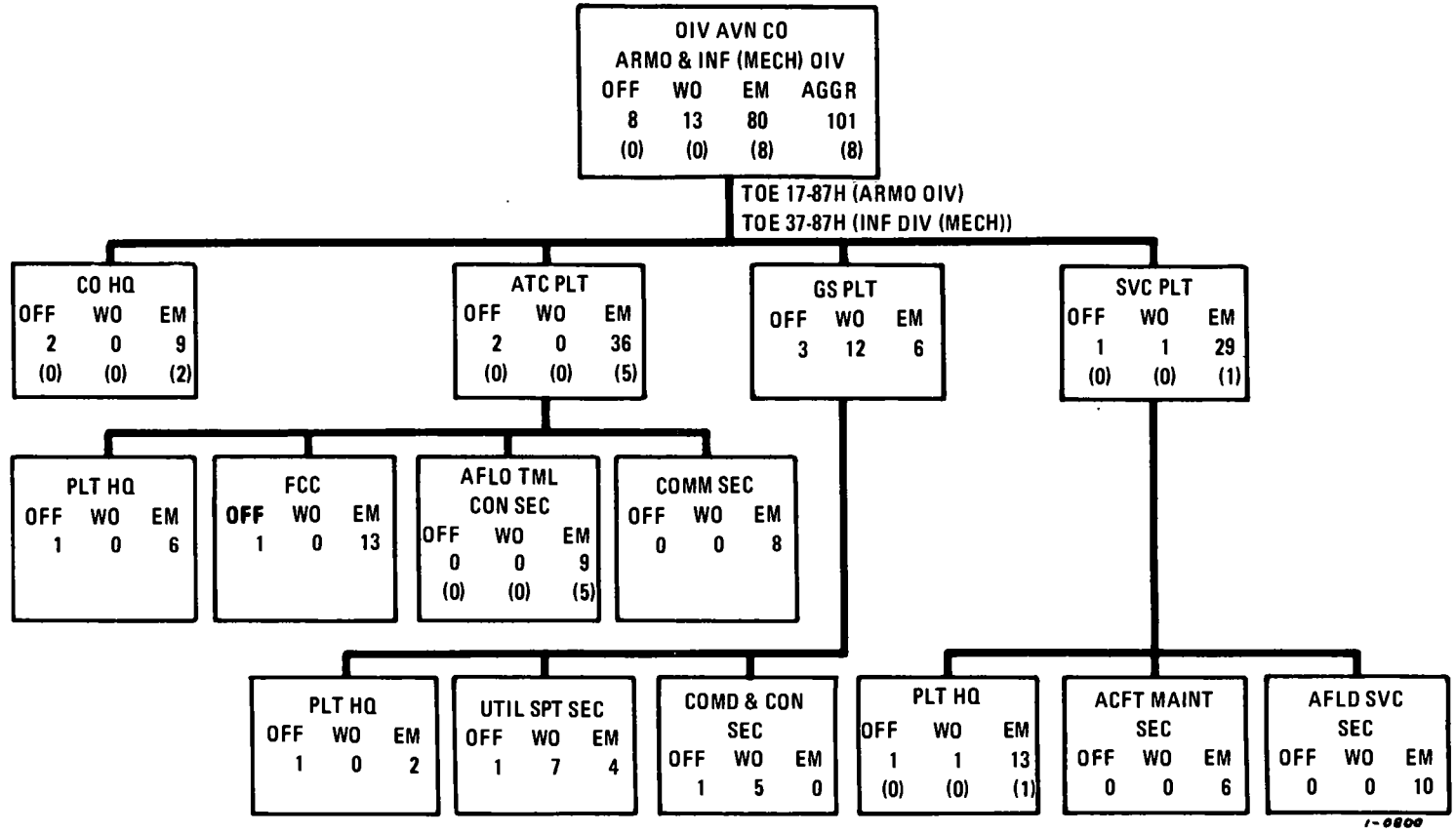

1. MISSION

To provide aviation support for division HQ.

2. ASSIGNMENT

a. Organic to armored division, TOE 17H.

b. Organic to infantry division (mechanized), TOE 37H.

3. CAPABILITIES

a. Provides aircraft for command, control, and liaison, as required by the division commander and staff.

b. Provides an instrumented airfield with terminal facilities, to include 24-hour ground controlled approach guidance.

c. Provides en route air traffic control and access into the Army air traffic control system.

d. Provides emergency air and weather warnings to aircraft.

e. Provides minimum refueling support for transient aircraft.

f. Provides emergency maintenance for transient aircraft.

g. Performs organizational maintenance on organic equipment.

4. MOBILITY

One hundred-percent mobile in organic vehicles and aircraft.

Figure 1–18. Division aviation company, armored and infantry (mechanized) divisions.

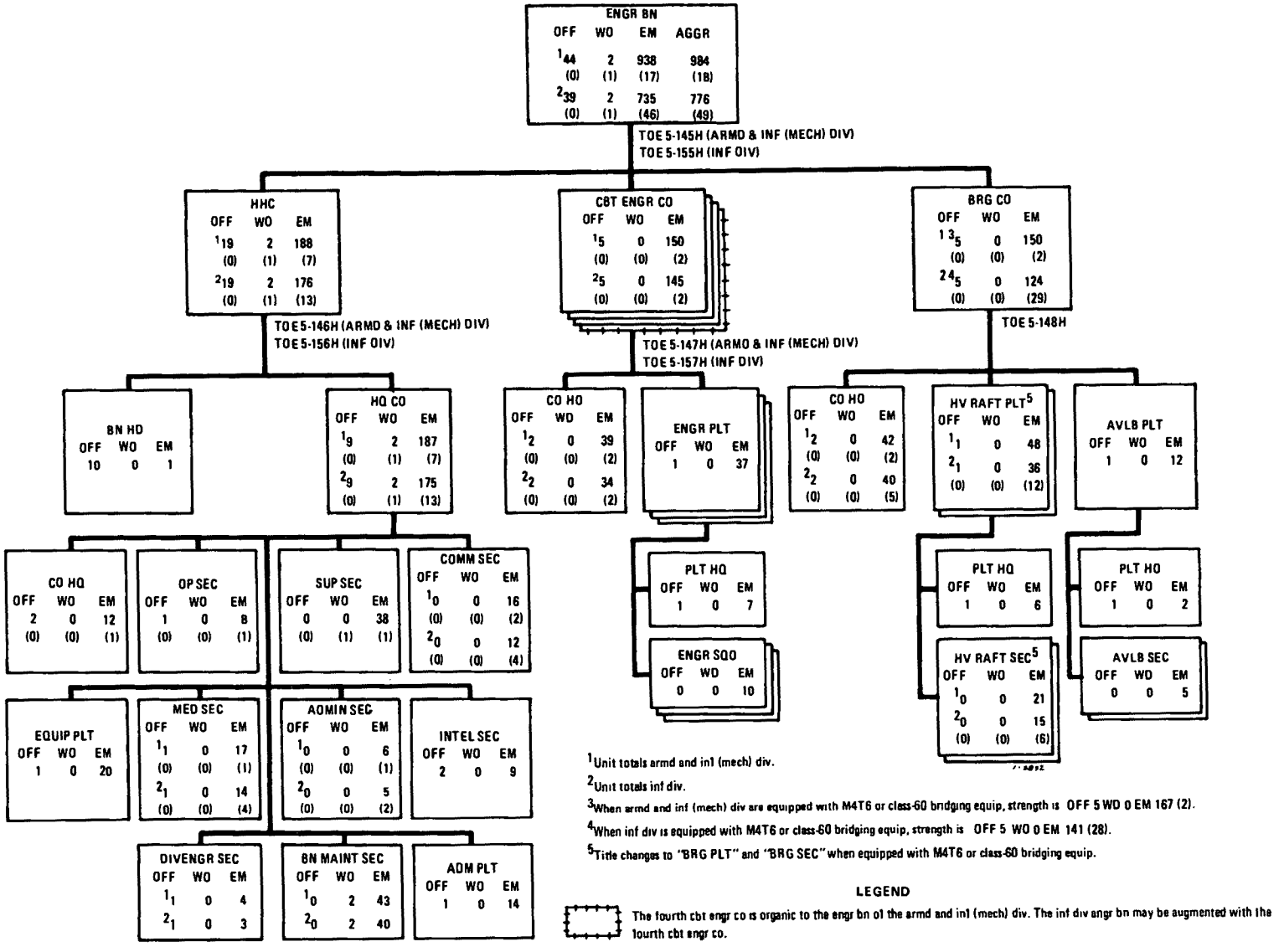

Figure 1–19. Engineer battalion, armored, infantry, and infantry (mechanized) divisions.

1. MISSION

To increase the combat effectiveness of the armored, infantry, or infantry (mechanized) division by means of engineer combat support and to carry out an infantry combat mission, when required.

2. ASSIGNMENT

a. Organic to armored division, TOE 17H.

b. Organic to infantry division, TOE 7H.

c. Organic to infantry division (mechanized), TOE 37H.

3. CAPABILITIES

a. Provides engineer staff planning and supervision for organic and attached engineer troops.

b. Constructs, repairs, and maintains roads, bridges, fords, and culverts.

c. Supports hasty stream-crossing operations with boats, rafts, and bridges; coordinates organic and attached engineer troops in support of deliberate stream crossings.

d. Provides fixed bridging for passage of short gaps.

e. Assists in the emplacement of obstacles, including mines and boobytraps.

f. Plans for, prepares, and executes firing of ADM. When required, this capability is increased by the attachment of TOE 5-570 cellular-type ADM teams.

g. Provides technical assistance to other troops in preparation of fortifications and camouflage.

h. Conducts engineer reconnaissance and produces engineer intelligence.

i. Performs construction work, including construction of landing strips.

j. Constructs and places deceptive devices and provides technical assistance in camouflage operations.

k. Furnishes personnel and equipment for water purification and the supply of potable water.

l. Provides technical advice to supported units on engineering matters, including recommendations for employment of engineer troops.

m. Assists in the assault of fortified positions.

n. Provides locally available materials for construction, fortifications, and camouflage.

o. Provides a unit to undertake and carry out an infantry combat mission, when required.

p. Performs organizational maintenance on equipment organic to the battalion.

4. MOBILITY

One hundred-percent mobile in organic vehicles.

Figure 1-19—Continued

TOE 5-146H HHC, ENGR BN, ARMD AND INF (MECH) DIV
TOE 5-156H HHC, ENGR BN, INF DIV

1. MISSION

a. HQ. To provide an engineer special staff section for the division and to provide command, control, and supervision of the engineer battalion, armored, infantry, and infantry (mechanized) divisions, and attached units.

b. HQ company.

(1) Engineer battalion, armored or infantry (mechanized) division. To provide an alternate CP, administration, operational control, communications, engineer reconnaissance and intelligence, supply, organizational maintenance support, supplemental engineer and ordnance construction equipment, and medical service for the battalion. Additionally, to provide for the production and supply of potable water for the division and for the operational employment of ADM.

(2) Engineer battalion, infantry division. To provide administration; operational control; and logistic support, to include medical service, for the battalion. Additionally, to provide for the production and supply of potable water for the division and for the operational employment of ADM.

c. To carry out infantry combat missions, when required.

2. ASSIGNMENT

a. Organic to engineer battalion, armored or infantry (mechanized) division, TOE 5-145H.

b. Organic to engineer battalion, infantry division, TOE 5-155H.

3. CAPABILITIES

a. Provides staff planning and supervision of division engineer operations, including attached engineer units.

b. Provides water purification and supply with five water points.

c. Performs engineer reconnaissance and intelligence for the engineer battalion and for the division.

d. Provides unit-level medical services for the battalion, to include medical care and evacuation, establishes an aid station, and furnishes company aidmen.

e. Provides radio and wire communications for the battalion when performing a normal engineer mission and when reorganized for combat as infantry.

f. Provides limited construction equipment support for subordinate units.

g. Provides limited ADM support to the division. This capability may be increased, as required, by the attachment of TOE 5-570 cellular-type ADM teams.

h. Performs organizational maintenance on organic communication and engineer equipment and vehicles.

4. MOBILITY

One hundred-percent mobile in organic vehicles.

Figure 1–19—Continued

1. MISSION

To increase the combat effectiveness of the engineer battalion, armored, infantry, or infantry (mechanized) division, by providing engineer combat support and to carry out infantry combat missions, when required.

2. ASSIGNMENT

a. Organic to engineer battalion, armored or infantry (mechanized) division, TOE 5-145H.

b. Organic to engineer battalion, infantry division, TOE 5-155H.

3. CAPABILITIES

a. Performs combat engineer tasks and, when reinforced with additional heavy equipment, can execute more complex engineer works.

b. Provides engineer support for combined arms teams of the armored, infantry, and infantry (mechanized) divisions.

c. Performs infantry combat missions, when required.

d. Performs organizational maintenance on its organic equipment and vehicles.

4. MOBILITY

One hundred-percent mobile in organic vehicles.

TOE 5-148H BRG CO, ENGR BN

1. MISSION

a. To provide technical personnel and equipment to maintain, load, transport, erect and operate, and disassemble tactical assault stream-crossing equipment.

b. To accomplish nontactical independent bridging or ferry missions, as required.

2. ASSIGNMENT

a. Organic to engineer battalion, armored or infantry (mechanized) division, TOE 5-145H.

b. Organic to engineer battalion, infantry division, TOE 5-155H.

3. CAPABILITIES

a. When equipped with mobile assault bridging equipment, can erect up to 143.8 meters of mobile assault amphibious bridge or four self-propelled class-60 rafts. Can construct floating bridges or ferries from amphibious bridge components in the following combinations:

(1) One 143.8-meter class-60 floating bridge, or

(2) Two 79.8-meter class-60 floating bridges, or

(3) Four 47.8-meter class 60-rafts.

b. When equipped with M4T6 or class-60 bridging equipment, can erect–

(1) The M4T6 bridge, which provides up to 170.6 meters of class-50 floating bridge or eight class-50 rafts. Bridge components may also be used to construct short, fixed spans.

(2) The class-60 bridge, which provides up to 164.5 meters of class-60 floating bridge, or four four-float (reinforced) rafts, or four five-float rafts, or combinations of bridges and rafts.

c. Provides armored vehicle launched bridging equipment capable of passing class-60 loads over wet or dry gaps up to 18.3 meters in width for four assault crossing sites.

d. Provides light stream-crossing equipage to support an infantry battalion in a river crossing when amphibious vehicles cannot be used, are not available, or river conditions preclude use of mobile amphibious bridge or ferry vehicles, as follows:

(1) Assault boats (18) and reconnaissance boats (12) to carry one infantry company by waterborne assault.

(2) Light tactical bridge equipage with the following options:

(a) Two class-12 ferries, or

(b) One class-12 bridge 31.4 meters long, or

(c) Eight pontons powered by outboard motors to be used as storm boats for assault crossings of infantry companies.

e. Provides organizational maintenance for organic engineer equipment and wheeled and tracked vehicles.

4. MOBILITY

One hundred-percent mobile in organic vehicles.

Figure 1–19—Continued

Table 1-13. Summary of Equipment—Field Artillery Battalion, Honest John, Armored, Infantry, and Infantry (Mechanized) Divisions

1	2		3	4	5	6
	LIN	Nomenclature	HQ H&S btry (6-176H)	2 FA btry HJ (6-177H) (1)	2 FA btry HJ (6-177H) (2)	Bn total (6-175H)
		CLASS 7B—GROUND SUPPORT				
1	E69242	COMP RCP PWR DRVN+AIR REC GAS DRVN 15 CFM 175 PSI.	1	0	0	1
2	E70064	COMP RCP PWR DRVN+TRK 2 WHL PNEU TIRES GAS DRVN 5 CFM 175 PSI.	1	1	2	3
3	J43918	GEN ST GAS ENG+1.5KW 60CY 1PH 2 WIRE AC 120V SHOCK	2	1	2	4
4	J44055	GEN ST GAS ENG+1.5KW DC 28V SHOCK	1	0	0	1
		CLASS 7G—ELECTRONICS				
5	Q34308	RADIO SET AN/GRC-160	2	0	0	2
6	Q38299	RADIO SET+ AN/PRC-77	2	1	2	4
7	Q53001	RADIO SET AN/VRC-46	10	5	10	20
8	Q54154	RADIO SET AN/VRC-47	2	1	2	4
9	Q55114	RADIO SET AN/VRC-49	1	0	0	1
10	Q90120	RADIO TELETYPEWRITER SET+AN/GRC-142 LESS POWER.	1	1	2	3
11	U81707	SWITCHBOARD TELEPHONE MANUAL+SB-22/PT	3	1	2	5
12	U82529	SWITCHBOARD TELEPHONE MANUAL+SB-993/GT	0	1	2	2
13	V30937	TELEPHONE SET+TA-264/PT	1	0	0	1
14	V31211	TELEPHONE SET+TA-312/PT	29	25	50	79
		CLASS 7K—TACTICAL VEHICLES				
15	W95400	TRAILER CARGO+1/4 TON 2 WHEEL W/E	4	2	4	8
16	W95537	TRAILER CARGO+3/4 TON 2 WHEEL W/E	10	2	4	14
17	W95811	TRAILER CARGO+1-1/2 TON 2 WHEEL W/E	6	2	4	10
18	W98825	TRAILER TANK+WATER 400 GALLON 1-1/2 TON 2 WHEEL W/E.	1	1	2	3
19	X38776	TRUCK AMBULANCE+3/4 TON 4×4 WE	1	0	0	1
20	X39735	TRUCK CARGO+3/4 TON 4×4 W/E	11	7	14	25
21	X39872	TRUCK CARGO+3/4 TON 4×4 W/WINCH W/E	4	1	2	6
22	X40009	TRUCK CARGO+2-1/2 TON 6×6 W/E	4	2	4	8
23	X40146	TRUCK CARGO+2-1/2 TON 6×6 W/WINCH W/E	3	2	4	7
24	X40283	TRUCK CARGO+2-1/2 TON 6×6 XLWB-W/E	0	1	2	2
25	X40968	TRUCK CARGO+5 TON 6×6 LWB W/WINCH W/E	1	0	0	1
26	X60833	TRUCK UTILITY+1/4 TON 4×4 W/E	14	3	6	20
27	X62340	TRUCK VAN+SHOP 2-1/2 TON 6×6 W/E	1	1	2	3
28	X63299	TRUCK WRECKER+5 TON 6×6 W/WINCH W/E	1	2	4	5
		CLASS 7L—MISSILES				
29	K27486	HEATING AND TIE-DOWN UNIT 762MM ROCKET TRK MTD+W/E (HONEST JN).	0	4	8	8
30	L45534	LAUNCHER ROCKET+762MM TRUCK MOUNTED W/E (HONEST JOHN).	0	2	4	4
		CLASS 7M—WEAPONS				
31	G02204	DETECTING SET MINE+PTBL METALLIC AND NON-METALLIC.	1	1	2	3
32	G02341	DETECTING SET MINE+PTBL METALLIC	1	1	2	3
33	L92386	MACHINE GUN 7.62 MILLIMETER+LIGHT FLEXIBLE	7	6	12	19
34	M75714	MOUNT TRIPOD MACHINE GUN+7.62 MILLIMETER	7	6	12	19
35	N96741	PISTOL CALIBER .45 AUTOMATIC+	6	3	6	12
36	R94977	RIFLE 5.56 MILLIMETER+W/E	101(7)	75(2)	150(4)	251(11)

Table 1-13. Summary of Equipment—Field Artillery Battalion, Honest John, Armored, Infantry, and Infantry (Mechanized) Divisions—Continued

1	2		3	4	5	6
LIN	Nomenclature		HQ H&S btry (6-176H)	2 FA btry HJ (6-177H)		Bn total (6-175H)
				(1)	(2)	
		CLASS 7Q—GENERAL EQUIPMENT				
37	V12141	TANK AND PUMP UNIT LIQUID DISPENSING TRUCK-MOUNTING+.	1	0	0	1

Table 1-14. Summary of Equipment—Air Defense Artillery Battalion, Chaparral/Vulcan, Self-Propelled, Armored, Infantry, and Infantry (Mechanized) Divisions

1	2		3	4	5	6	7	8
LIN	Nomenclature		HHB (44-326H)	2 ADA btry Vulcan, SP (44-327H)		2 ADA btry CHAP, SP (44-328H)		Bn total (44-325H)
				(1)	(2)	(1)	(2)	
		CLASS 7B—GROUND SUPPORT						
1	E70064	COMP RCP PWR DRVN+ TRK 2 WHL PNEU TIRES GAS DRVN 5 CFM 175 PSI.	1	1	2	1	2	5
2	J43918	GEN ST GAS ENG+ 1.5KW 60CY 1PH 2 WIRE AC 120V SHOCK.	1	2	4	2	4	9
3	J44055	GEN ST GAS ENG+ 1.5KW DC 28V SHOCK.	4(3)	3	6	6	12	22(3)
		CLASS 7G—ELECTRONICS						
4	Q32756	RADIO SET AN/GRC-106	5(25)	0	0	0	0	5(25)
5	Q53001	RADIO SET AN/VRC-46	7(8)	3	6	3	6	19(8)
6	Q54154	RADIO SET AN/VRC-47	5(15)	17	34	1	34	23(15)
7	Q55114	RADIO SET AN/VRC-49	1(9)	0	0	0	0	1(9)
8	Q90120	RADIO TELETYPEWRITER SET+ AN/GRC-142 LESS POWER.	2	0	0	0	0	2
9	U81707	SWITCHBOARD TELEPHONE MANUAL+SB-22/PT.	0	4	8	4	8	16
10	U82255	SWITCHBOARD TELEPHONE MANUAL +SB-86/P.	1	0	0	0	0	1
11	V30252	TELEPHONE SET+ TA-1/PT	8	8	16	8	16	40
12	V31211	TELEPHONE SET+ TA-312/PT	20(29)	32	64	56	112	116(29)
13	V41968	TELETYPEWRITER SET+ AN/GGC-3	1	0	0	0	0	1
14	V42105	TELETYPEWRITER SET+ AN/PGC-1	1	0	0	0	0	1
		CLASS 7K—TACTICAL VEHICLES						
15	D12086	CARRIER PERSONNEL FULL TRACKED+ ARMORED.	0	4	8	0	0	8
16	EQ2807	CHASSIS TLR+ GENR 2-1/2 TON 2 WHEEL W/E.	0(6)	0	0	0	0	0(6)
17	W95400	TRAILER CARGO+ 1/4 TON 2 WHEEL W/E.	12(17)	2	4	6	12	28(17)
18	W95537	TRAILER CARGO+ 3/4 TON 2 WHEEL W/E.	6(26)	7	14	7	14	34(26)
19	W95811	TRAILER CARGO+ 1-1/2 TON 2 WHEEL W/E.	6	8	16	7	14	36

Table 1-14. Summary of Equipment—Air Defense Artillery Battalion, Chaparral/Vulcan, Self-Propelled, Armored, Infantry, and Infantry (Mechanized) Divisions—Continued

1	2	3	4	5	6	7	8
LIN	Nomenclature	HHB (44-326H)	2 ADA btry Vulcan, SP (44-327H)		2 ADA btry CHAP, SP (44-328H)		Bn total (44-325H)
			(1)	(2)	(1)	(2)	
20 W98825	TRAILER TANK+ WATER 400 GALLON 1-1/2 TON 2 WHEEL W/E.	1	1	2	1	2	5
21 X38776	TRUCK AMBULANCE+ 3/4 TON 4×4 W/E.	1	0	0	0	0	1
22 X39735	TRUCK CARGO+ 3/4 TON 4×4 W/E---	8(15)	8	16	8	16	40(15)
23 X40009	TRUCK CARGO+ 2-1/2 TON 6×6 W/E-	7	4	8	9	18	33
24 X40146	TRUCK CARGO+ 2-1/2 TON 6×6 W/WINCH W/E.	1	2	4	3	6	11
25 X40283	TRUCK CARGO+ 2-1/2 TON 6×6 XLWB W/E.	0(3)	0	0	1	2	2(3)
26 X40831	TRUCK CARGO+ 5 TON 6×6 LWB W/E.	0	3	6	0	0	6
27 X60833	TRUCK UTILITY+ 1/4 TON 4×4 W/E-	14(17)	2	4	6	12	30(17)
28 X62340	TRUCK VAN+ SHOP 2-1/2 TON 6×6 W/E.	1(3)	0	0	0	0	1(3)
29 X62477	TRUCK VAN+ SHOP 2-1/2 TON 6×6 W/WINCH W/E.	0	1	2	1	2	4
30 X63299	TRUCK WRECKER+ 5 TON 6×6 W/WINCH W/E.	1	1	2	1	2	5
	CLASS 7L—MISSILES						
31 J95533	GUIDED MISSILE SYSTEM INTERCEPT CARRIER MTD, (CHAPARRAL).	0	0	0	12	24	24
	CLASS 7M—WEAPONS						
32 G02204	DETECTING SET MINE+ PTBL METALLIC AND NON METALLIC.	1	1	2	1	2	5
33 G02341	DETECTING SET MINE+ PTBL METALLIC.	1	1	2	1	2	5
34 J96694	GUN ANTIAIRCRAFT ARTILLERY SELF-PROPELLED+ 20MM.	0	12	24	0	0	24
35 L92386	MACHINE GUN 7.62 MILLIMETER+ LIGHT FLEXIBLE.	4	4	8	4	8	20
36 M75714	MOUNT TRIPOD MACHINE GUN+ 7.62 MILLIMETER.	4	4	8	4	8	20
37 N96741	PISTOL CALIBER .45 AUTOMATIC+--	11	4	8	3	6	25
38 R50543	RECOVERY VEHICLE FULL TRACKED+ LIGHT ARMORED.	1	1	2	1	2	5
39 R94977	RIFLE 5.56 MILLIMETER+ W/E------	36(93)	104(6)	208(12)	119(8)	238(16)	532(121)
	CLASS 7Q—GENERAL EQUIPMENT						
40 V12141	TANK AND PUMP UNIT LIQUID DISPENSING TRUCKMOUNTING+.	1	2	4	2	4	9
41 V19950	TANK UNIT LIQUID DISPENSING TRAILER MOUNTING+.	1	1	2	1	2	5

Table 1-15. Summary of Equipment—Combat Aviation Battalion, Infantry Division

1	2	3	4	5	6
LIN	Nomenclature	HHC (7-76H)	Aslt hel co (7-77H)	Avn GS co (7-78H)	Bn total (7-75H)
	CLASS 7A—AIR				
1 K29660	HELICOPTER ATTACK+AH-1G	0	0	6	6
2 K30645	HELICOPTER OBSERVATION+OH-6A	0	0	4	4
3 K31795	HELICOPTER UTILITY, UH-1H	0	25	2	27
	CLASS 7B—GROUND SUPPORT				
4 E70064	COMP RCP PWR DRVN+TRK 2 WHL PNEU TIRES GAS DRVN 5 CFM 175 PSI.	1	1	1	3
5 H56391	FIRE FIGHT EQUIP SET+TRK MTD ARMY AIRCRAFT CRASH OS CL 530B.	0	1	1	2
6 J41041	GENERATOR SET GASOLINE ENGINE TRAILER MTD+ PU-253/U.	1	0	0	1
7 J41589	GENERATOR SET GASOLINE ENGINE TRAILER MTD+ PU-322/G.	2	0	0	2
8 J43918	GEN ST GAS ENG+1.5KW 60CY 1PH 2 WIRE AC 120V SHOCK	2	3	3	8
9 J44055	GEN ST GAS+1.5KW DC 28V SHOCK	2	0	0	2
10 J47068	GEN ST GAS ENG+5KW 60CY 1-3PH AC 120 240 120/208V SKD-SHK MTD.	1	1	1	3
11 P96640	PUMPING ASSEMBLY FLAMMABLE LIQUID BULK TRANSFER+.	0	3	5	8
	CLASS 7G—ELECTRONICS				
12 Q42092	RADIO SET+AN/URC-10	0	25	12	37
13 Q50421	RADIO SET+AN/VRC-24	0	1	1	2
14 Q53001	RADIO SET+AN/VRC-46	1	2	2	5
15 Q54154	RADIO SET+AN/VRC-47	2	4	2	8
16 Q55114	RADIO SET+AN/VRC-49	1	0	0	1
17 Q56783	RADIO SET+AN/VRC-64	0	1	1	2
18 Q90120	RADIO TELETYPEWRITER SET+AN/GRC-142 LESS POWER.	1	0	0	1
19 U81707	SWITCHBOARD TELEPHONE MANUAL+SB-22/PT	1	1	1	3
20 V30937	TELEPHONE SET+TA-264/PT	1	0	0	1
21 V31211	TELEPHONE SET+TA-312/PT	11	9	7	27
22 V42105	TELETYPEWRITER SET+AN/PGC-1	1	0	0	1
	CLASS 7K—TACTICAL VEHICLES				
23 W95400	TRAILER CARGO+1/4 TON 2 WHEEL W/E	5	1	2	8
24 W95537	TRAILER CARGO+3/4 TON 2 WHEEL W/E	6	7	5	18
25 W95811	TRAILER CARGO+1-1/2 TON 2 WHEEL W/E	5	10	8	23
26 W98825	TRAILER TANK+WATER 400 GALLON 1-1/2 TON 2 WHEEL W/E.	0	1	1	2
27 X38776	TRUCK AMBULANCE+3/4 TON 4×4 WE	1	0	0	1
28 X39735	TRUCK CARGO+3/4 TON 4×4 W/E	7	6	5	18
29 X39872	TRUCK CARGO+3/4 TON 4×4 W/WINCH W/E	4	1	0	5
30 X40009	TRUCK CARGO+2-1/2 TON 6×6 W/E	2	2	2	6
31 X40146	TRUCK CARGO+2-1/2 TON 6×6 W/WINCH W/E	5	2	4	11
32 X57271	TRUCK TANK+FUEL SERVICING 2-1/2 TON 6×6 W/E	0	6	4	10
33 X60833	TRUCK UTILITY+1/4 TON 4×4 W/E	5	1	3	9
34 X62340	TRUCK VAN+SHOP 2-1/2 TON 6×6 W/E	2	1	1	4
35 X63299	TRUCK WRECKER+5 TON 6×6 W/WINCH W/E	1	0	0	1
	CLASS 7M—WEAPONS				
36 A89819	ARMAMENT POD AIRCRAFT 7.62 MILLIMETER MACHINE GUN+W/E.	0	0	12	12
37 A90117	ARMAMENT SUBSYSTEM HELICOPTER 7.62 MILLIMETER MACHINE GUN+LIGHT.	0	13(12)	0	13(12)

Table 1-15. Summary of Equipment—Combat Aviation Battalion, Infantry Division—Continued

1	2	3	4	5	6
LIN	Nomenclature	HHC (7-76H)	Asit hel co (7-77H)	Avn GS co (7-78H)	Bn total (7-75H)
38 A90436	ARMAMENT SUBSYS HEL 7.62 MM MG 40MM GRENADE LNCHR+HIGH RATE.	0	0	6	6
39 L92386	MACHINE GUN 7.62 MILLIMETER+LIGHT FLEXIBLE	0	2	4	6
40 M75714	MOUNT TRIPOD MACHINE GUN+7.62 MILLIMETER	0	2	4	6
41 R91244	REVOLVER CALIBER .38+4 INCH BARREL	14	82(24)	30	126(24)
42 R94977	RIFLE 5.56 MILLIMETER+W/E	75(7)	64(4)	65(4)	204(15)

Table 1-16. Summary of Equipment—Engineer Battalion, Armored and Infantry (Mechanized) Divisions (With Mobile Assault Bridge)

1	2	3	4	5	6	7
LIN	Nomenclature	HHC (5-146H)	4 cbt engr co (5-147H)		Brg co (5-148H)	Bn total (5-145H)
			(1)	(4)		
	CLASS 7B—GROUND SUPPORT					
1 C20414	BRIDGE ARMOR VEH LAUNCH SCISSOR TY+ CL 60 ALUM 60 FT LG OF SPAN.	0	0	0	6	6
2 C25757	BRIDGE FLOATING+ RAFT SECT LIGHT TACTICAL.	0	0	0	2	2
3 C29490	BUCKET CLAMSHELL+ 3/4 CU YD	2	0	0	0	2
4 C30997	BUCKET DRAGLINE+ 3/4 CU YD	1	0	0	0	1
5 E69242	COMP RCP PWR DRVN+ AIR REC GAS DRVN 15 CFM 175 PSI.	1	0	0	0	1
6 E70064	COMP RCP PWR DRVN+ TRK 2 WHL PNEU TIRES GAS DRVN 5 CFM 175 PSI.	0	1	4	1	5
7 E73626	COMP RTY PWR DRVN+ AIR WHBRW FR 2 PNU TIRE GAS DRV 60 CFM 6.5 PSI.	0	0	0	2	2
8 F39378	CRANE WHEEL MTD+ 20 TON 3/4 CU YD ROUGH TERRAIN.	2	0	0	1	3
9 H32869	FAIRLEAD ROLLER AND SHEAVE+ 12-1/2 CR-SHVL CRLR 20T CR-SHVL TRK.	2	0	0	0	2
10 H38787	FERRY CONVERSION SET RAFT+ INF SPT	0	0	0	2	2
11 J43918	GEN ST GAS ENG+ 1.5KW 60CY 1PH 2 WIRE AC 120V SHOCK.	1	1	4	1	6
12 J44055	GEN ST GAS ENG+ 1.5KW DC 28V SHOCK	4	1	4	1	9
13 J45699	GEN ST GAS ENG+ 3KW 60CY 1-3PH 120/240V 120/208V SKID SHOCK.	3	3	12	1	16
14 J74852	GRADER ROAD MOTORIZED+ DSL DRVN HVY 6×4 FRONT-WHL STEER.	4	0	0	0	4
15 L01326	ION EXCHANGE UNIT WATER PURIFICATION TRUCK MTD+ 3000 GPH MAX FLOW.	1	0	0	0	1
16 L43664	LAUNCH M60 SERIES TANK CHASS TRNSPTG+ 40 AND 60 FT BRDGE TY CL60.	0	0	0	4	4
17 P11866	PNEUMATIC TOOL AND COMPRESSOR OUTFIT+ 250 CFM TRLR MTD.	1	1	4	0	5
18 P91756	PUMP CENTRF+ GAS DRVN FRAME MTD 1-1/2 IN 65 GPM 50 FT HD.	2	0	0	2	4
19 P92030	PUMP CENTRF+ GAS DRVN FRAME MTD 2 IN 125 GPM 50 FT HD.	5	0	0	0	5
20 V09730	TAGLINE CRANE AND CRANE-SHOVEL+ 3/4 TO 1 CU YD BUCKET.	2	0	0	0	2
21 W76816	TRACTOR FULL TRCKD LOW SPD+ DSL MED DBP W/BULDOZ W/SCARIF WINCH.	3	1	4	0	7

Table 1-16. Summary of Equipment—Engineer Battalion, Armored and Infantry (Mechanized) Divisions (With Mobile Assault Bridge)—Continued

1	2	3	4	5	6	7
LIN	Nomenclature	HHC (5-146H)	4 cbt engr co (5-147H)		Brg co (5-148H)	Bn total (5-145H)
			(1)	(4)		
X48914	TRUCK LIFT FORK+ DSL DRVN 6000 LB CAP ROUGH TERRAIN.	1	0	0	0	1
Y35486	WATER PURIF EQUIP SET+ TRK MTD DIATOMITE FILTER 1500 GPH (ARMY).	5	0	0	0	5
	CLASS 7G—ELECTRONICS					
Q34308	RADIO SET AN/GRC-160	3	9	36	8	47
Q38299	RADIO SET+ AN/PRC-77	3	4	16	0	19
Q53001	RADIO SET AN/VRC-46	8	3	12	4	24
Q54154	RADIO SET AN/VRC-47	4	2	8	5	17
Q55114	RADIO SET AN/VRC-49	1	0	0	0	1
Q56783	RADIO SET AN/VRC-64	0	2	8	20	28
Q90120	RADIO TELETYPEWRITER SET+ AN/GRC-142 LESS POWER.	2	0	0	0	2
U81707	SWITCHBOARD TELEPHONE MANUAL+ SB-22/PT.	2	1	4	1	7
U82529	SWITCHBOARD TELEPHONE MANUAL+ SB-993/GT.	0	3	12	0	12
V30252	TELEPHONE SET+TA-1/PT	0	12	48	4	52
V31211	TELEPHONE SET+TA-312/PT	26	7	28	5	59
	CLASS 7K—TACTICAL VEHICLES					
D11538	CARRIER COMMAND POST+ LIGHT TRACKED	1	0	0	0	1
D12086	CARRIER PERSONNEL FULL TRACKED+ ARMORED.	3	10	40	0	43
S70517	SEMITRAILER LOW BED+ 25 TON 4 WHEEL W/E.	3	1	4	3	10
W94441	TRAILER BASIC UTILITY+ 2-1/2 TON 2 SINGLE WHEELS W/E.	0	0	0	2	2
W95263	TRAILER CABLE REEL+ 3-1/2 TON 2 WHEEL W/E.	0	0	0	2	2
W95400	TRAILER CARGO+ 1/4 TON 2 WHEEL W/E	12	2	8	8	28
W95537	TRAILER CARGO+ 3/4 TON 2 WHEEL W/E	5	1	4	3	12
W95811	TRAILER CARGO+ 1-1/2 TON 2 WHEEL W/E	24	2	8	9	41
W98825	TRAILER TANK+ WATER 400 GALLON 1-1/2 TON 2 WHEEL W/E.	1	1	4	1	6
X38639	TRUCK AMBULANCE+ 1/4 TON 4×4 W/E	1	0	0	0	1
X39735	TRUCK CARGO+ 3/4 TON 4×4 W/E	12	4	16	3	31
X40009	TRUCK CARGO+ 2-1/2 TON 6×6 W/E	12	2	8	3	23
X40146	TRUCK CARGO+ 2-1/2 TON 6×6 W/WINCH W/E	0	1	4	13	17
X40831	TRUCK CARGO+ 5 TON 6×6 LWB W/E	6	0	0	0	6
X43845	TRUCK DUMP+ 5 TON 6×6 W/WINCH W/E	6	4	16	0	22
X59326	TRUCK TRACTOR+ 5 TON 6×6 W/E	1	0	0	0	1
X59874	TRUCK TRACTOR+ 10 TON 6×6 W/MIDSHIP WINCH W/LOW MTD 5TH WHL W/E.	3	1	4	3	10
X60833	TRUCK UTILITY+ 1/4 TON 4×4 W/E	12	2	8	8	28
X62340	TRUCK VAN+ SHOP 2-1/2 TON 6×6 W/E	1	0	0	0	1
X63299	TRUCK WRECKER+ 5 TON 6×6 W/WINCH W/E	1	0	0	0	1
	CLASS 7M—WEAPONS					
E56577	COMBAT ENGINEER VEHICLE FULL TRACKED+	0	2	8	0	8
G02204	DETECTING SET MINE+ PTBL METALLIC AND NON METALLIC.	7	13	52	3	62
G02341	DETECTING SET MINE+ PTBL METALLIC	6	10	40	3	49

Table 1-16. Summary of Equipment—Engineer Battalion, Armored and Infantry (Mechanized) Divisions (With Mobile Assault Bridge)—Continued

1	2	3	4	5	6	7
LIN	Nomenclature	HHC (5-146H)	4 cbt engr co (5-147H)		Brg co (5-148H)	Bn total (5-145H)
			(1)	(4)		
58 L92386	MACHINE GUN 7.62 MILLIMETER+ LIGHT FLEXIBLE.	3	3	12	0	15
59 M75714	MOUNT TRIPOD MACHINE GUN+ 7.62 MILLIMETER.	3	3	12	0	15
60 N96741	PISTOL CALIBER .45 AUTOMATIC+	31	9	36	9	76
61 R50680	RECOVERY VEHICLE FULL TRACKED+ MEDIUM.	2	0	0	0	2
62 R94977	RIFLE 5.56 MILLIMETER+ W/E	177(9)	146(2)	584(8)	151(61)	912(78)
	CLASS 7Q—GENERAL EQUIPMENT					
63 B83856	BOAT LANDING INFLATABLE+ ASSAULT CRAFT NYLON CLOTH 15 MAN.	0	0	0	18	18
64 B84404	BOAT RECONNAISSANCE+ PNEUMATIC 3-MAN.	4	4	16	12	32
65 T10138	SHOP EQUIP CONTACT MAINT TRK MTD+	1	0	0	1	2
66 T13152	SHOP EQUIP ORGANZL REP LIGHT TRK MTD+	1	0	0	0	1
67 V12141	TANK AND PUMP UNIT LIQUID DISPENSING TRUCKMOUNTING+.	6	0	0	0	6
68 V19950	TANK UNIT LIQUID DISPENSING TRAILER MOUNTING+.	6	0	0	0	6

Table 1-17. Summary of Equipment— Engineer Battalion, Infantry Division (With Mobile Assault Bridge)

1	2	3	4	5	6	7
LIN	Nomenclature	HHC (5-156H)	3 cbt engr co (5-157H)		Brg co (5-148H)	Bn total (5-155H)
			(1)	(3)		
	CLASS 7B—GROUND SUPPORT					
1 C20414	BRIDGE ARMOR VEH LAUNCH SCISSOR TY+ CL 60 ALUM 60 FT LG OF SPAN.	0	0	0	6	6
2 C25757	BRIDGE FLOATING+ RAFT SECT LIGHT TACTICAL.	0	0	0	2	2
3 C29490	BUCKET CLAMSHELL+ 3/4 CU YD	2	0	0	0	2
4 C30997	BUCKET DRAGLINE+ 3/4 CU YD	1	0	0	0	1
5 E69242	COMP RCP PWR DRVN+ AIR REC GAS DRVN 15 CFM 175 PSI.	1	0	0	0	1
6 E70064	COMP RCP PWR DRVN+ TRK 2 WHL PNEU TIRES GAS DRVN 5 CFM 175 PSI.	0	1	3	1	4
7 E73626	COMP RTY PWR DRVN+ AIR WHBRW FR 2 PNU TIRE GAS DRV 60 CFM 6.5PSI.	0	0	0	2	2
8 F39378	CRANE WHEEL MTD+ 20 TON 3/4 CU YD ROUGH TERRAIN.	2	0	0	1	3
9 H32869	FAIRLEAD ROLLER AND SHEAVE+ 12-1/2T CR-SHVL CRLR 20T CR SHVL TRK.	2	0	0	0	2
10 H38787	FERRY CONVERSION SET RAFT+ INF SPT	0	0	0	2	2
11 J43918	GEN ST GAS ENG+ 1.5KW 60CY 1PH 2 WIRE AC 120V SHOCK.	1	1	3	1	5
12 J44055	GEN ST GAS ENG+ 1.5KW DC 28V SHOCK	4	1	3	1	8
13 J45699	GEN ST GAS ENG+ 3KW 60CY 1-3PH 120/240V 120/208V SKID SHOCK.	2	3	9	1	12

Table 1-17. Summary of Equipment—
Engineer Battalion, Infantry Division (With Mobile Assault Bridge)—Continued

1	2	8	4	5	6	7
LIN	Nomenclature	HHC (5-156H)	3 cbt engr co (5-157H)		Brg co (5-148H)	Bntotal (5-155H)
			(1)	(3)		
14 J47068	GEN ST GAS ENG+ 5KW 60CY 1-3PH AC 120/240 120/208V SKD-SHK MTD.	1	0	0	0	1
15 J74852	GRADER ROAD MOTORIZED+ DSL DRVN HVY 6×4 FRONT-WHL STEER.	4	0	0	0	4
16 L01326	ION EXCHANGE UNIT WATER PURIFICATION TRUCK MTD+ 3000GPH MAX FLOW.	1	0	0	0	1
17 L43664	LAUNCH M60 SERIES TANK CHASS TRNSPTG+ 40 AND 60 FT BRDGE TY CL60.	0	0	0	4	4
18 P11866	PNEUMATIC TOOL AND COMPRESSOR OUTFIT+ 250 CFM TRLR MTD.	1	1	3	0	4
19 P91756	PUMP CENTRF+ GAS DRVN FRAME MTD 1-1/2 IN 65GPM 50 FT HD.	2	0	0	2	4
20 P92030	PUMP CENTRF+ GAS DRVN FRAME MTD 2 IN 125 GPM 50 FT HD.	5	0	0	0	5
21 V09730	TAGLINE CRANE AND CRANE-SHOVEL+ 3/4 TO 1 CU YD BUCKET.	2	0	0	0	2
22 W76816	TRACTOR FULL TRCKD LOW SPD+ DSL MED DBP W/BULDOZ W/SCARIF WINCH.	3	2	6	0	9
23 X48914	TRUCK LIFT FORK+ DSL DRVN 6000 LB CAP ROUGH TERRAIN.	1	0	0	0	1
24 Y35486	WATER PURIF EQUIP SET+ TRK MTD DIATOMITE FILTER 1500 GPH (ARMY).	5	0	0	0	5
	CLASS 7G—ELECTRONICS					
25 Q34308	RADIO SET AN/GRC-160	3	9	27	8	38
26 Q38299	RADIO SET+ AN/PRC-77	3	4	12	0	15
27 Q53001	RADIO SET AN/VRC-46	7	3	9	5	21
28 Q54154	RADIO SET AN/VRC-47	4	2	6	4	14
29 Q55114	RADIO SET AN/VRC-49	1	0	0	0	1
30 Q56783	RADIO SET AN/VRC-64	0	1	3	20	23
31 Q90120	RADIO TELETYPEWRITER SET+ AN/GRC-142 LESS POWER.	2	0	0	0	2
32 U81707	SWITCHBOARD TELEPHONE MANUAL+ SB-22/PT.	2	1	3	1	6
33 U82529	SWITCHBOARD TELEPHONE MANUAL+ SB-993/GT.	0	3	9	0	9
34 V30252	TELEPHONE SET+ TA-1/PT	0	12	36	4	40
35 V31211	TELEPHONE SET+ TA-312/PT	24	7	21	5	50
	CLASS 7K—TACTICAL VEHICLES					
36 S70517	SEMITRAILER LOW BED+ 25 TON 4 WHEEL W/E	3	2	6	3	12
37 W94441	TRAILER BASIC UTILITY+ 2-1/2 TON 2 SINGLE WHEELS W/E.	0	0	0	2	2
38 W95263	TRAILER CABLE REEL+ 3-1/2 TON 2 WHEEL W/E.	0	0	0	2	2
39 W95400	TRAILER CARGO+ 1/4 TON 2 WHEEL W/E	12	2	6	8	26
40 W95537	TRAILER CARGO+ 3/4 TON 2 WHEEL W/E	9	2	6	3	18
41 W95811	TRAILER CARGO+ 1-1/2 TON 2 WHEEL W/E	24	2	6	9	39
42 W98825	TRAILER TANK+ WATER 400 GALLON 1-1/2 TON 2 WHEEL W/E.	1	1	3	1	5
43 X38639	TRUCK AMBULANCE+ 1/4 TON 4×4 W/E	1	0	0	0	1
44 X39735	TRUCK CARGO+ 3/4 TON 4×4 W/E	12	5	15	3	30
45 X40009	TRUCK CARGO+ 2-1/2 TON 6×6 W/E	12	2	6	3	21
46 X40146	TRUCK CARGO+ 2-1/2 TON 6×6 W/WINCH W/E	3	1	3	13	19

Table 1-17. Summary of Equipment—
Engineer Battalion, Infantry Division (With Mobile Assault Bridge)—Continued

1	2	3	4	5	6	7
LIN	Nomenclature	HHC (5-156H)	3 cbt engr co (5-157H)		Brg co (5-148H)	Bn total (5-155H)
			(1)	(3)		
47 X40831	TRUCK CARGO+ 5 TON 6×6 LWB W/E	6	0	0	0	6
48 X43845	TRUCK DUMP+ 5 TON 6×6 W/WINCH W/E	6	13	39	0	45
49 X59326	TRUCK TRACTOR+ 5 TON 6×6 W/E	1	0	0	0	1
50 X59874	TRUCK TRACTOR+ 10 TON 6×6 W/MIDSHIP WINCH W/LOW MTD 5TH WHL W/E.	3	2	6	3	12
51 X60833	TRUCK UTILITY+ 1/4 TON 4×4 W/E	12	2	6	8	26
52 X62340	TRUCK VAN+ SHOP 2-1/2 TON 6×6 W/E	1	0	0	0	1
53 X63299	TRUCK WRECKER+ 5 TON 6×6 W/WINCH W/E	1	0	0	0	1
	CLASS 7M—WEAPONS					
54 E56577	COMBAT ENGINEER VEHICLE FULL TRACKED+.	0	1	3	0	3
55 G02204	DETECTING SET MINE+ PTBL METALLIC AND NONMETALLIC.	6	13	39	3	48
56 G02341	DETECTING SET MINE+ PTBL METALLIC	6	10	30	3	39
57 L91975	MACHINE GUN CALIBER .50 +HB FLEXIBLE FOR GROUND USE.	0	1	3	0	3
58 L92386	MACHINE GUN 7.62 MILLIMETER+ LIGHT FLEXIBLE.	3	6	18	0	21
59 M75577	MOUNT TRIPOD MACHINE GUN+ HEAVY CALIBER 50.	0	1	3	0	3
60 M75714	MOUNT TRIPOD MACHINE GUN+ 7.62 MILLIMETER.	3	6	18	0	21
61 N96741	PISTOL CALIBER .45 AUTOMATIC+	21 (3)	5	15	9	45 (3)
62 R50680	RECOVERY VEHICLE FULL TRACKED+ MEDIUM.	1	0	0	0	1
63 R94977	RIFLE 5.56 MILLIMETER+ W/E	175 (11)	145 (2)	435 (6)	125 (61)	735 (78)
	CLASS 7Q—GENERAL EQUIPMENT					
64 B83856	BOAT LANDING INFLATABLE+ ASSAULT CRAFT NYLON CLOTH 15 MAN.	0	0	0	18	18
65 B84404	BOAT RECONNAISSANCE+ PNEUMATIC 3-MAN	4	4	12	12	28
66 L85420	LUBRICAT-SERV UNIT PWR OPER+ TRLR MTD 15CF AIR COMP GAS DRVN WZD.	1	0	0	0	1
67 T10138	SHOP EQUIP CONTACT MAINT TRK MTD+	1	0	0	1	2
68 T13152	SHOP EQUIP ORGANZL REP LIGHT TRK MTD+	1	0	0	0	1
69 V12141	TANK AND PUMP UNIT LIQUID DISPENSING TRUCKMOUNTING+.	6	0	0	0	6
70 V19950	TANK UNIT LIQUID DISPENSING TRAILER MOUNTING+.	6	0	0	0	6

Table 1-18. Summary of Equipment—Signal Battalion, Armored, Infantry, and Infantry (Mechanized) Divisions

1	2	3	4	5	6	7
LIN	Nomenclature	HHC (11-36H)	Comd op co (11-37H)	Fwd comm co (11-38H)	Spt op co (11-39H)	Bn total (11-35H)
	CLASS 7B—GROUND SUPPORT					
1 E69242	COMP RCP PWR DRVN+ AIR REC GAS DRVN 15 CFM 175 PSI.	1	0	0	0	1
2 E70004	COMP RCP PWR DRVN+ TRK 2 WHL PNEU TIRES GAS DRVN 5 CFM 175 PSI.	0	1	1	1	3
3 J35561	GEN ST DSL ENG TM+ 45KW 60CY 3PH AC 120/208 240/416V PU-407/M.	0	2	0	0	2
4 J35698	GEN ST DSL ENG TRK MTD+ 45KW 60CY 3PH AC 120/218 240/416V PU408M.	0	2	0	0	2
5 J41589	GENERATOR SET GASOLINE ENGINE TRAILER MTD+ PU-322/G.	0	2	3	1	6
6 J43918	GEN ST GAS ENG+ 1.5KW 60CY 1PH 2 WIRE AC 120V SHOCK.	2	0	0	0	2
	CLASS 7G—ELECTRONICS					
7 Q38299	RADIO SET+ AN/PRC-77	0	4	3	0	7
8 Q53001	RADIO SET AN/VRC-46	3	5	7	6	21
9 Q54154	RADIO SET AN/VRC-47	4	0	0	6	10
10 Q55114	RADIO SET AN/VRG-49	0	2	3	1	6
11 Q90120	RADIO TELETYPEWRITER SET+ AN/GRC-142 LESS POWER.	0	6	9	7	22
12 Q92893	RADIO TERMINAL SET AN/TRC-145	0	2	12	7	21
13 R78061	REPEATER SET RADIO AN/TRC-113	0	12	0	7	19
14 U81707	SWITCHBOARD TELEPHONE MANUAL+ SB-22/PT.	1	2	3	1	7
15 V31211	TELEPHONE SET+ TA-312/PT	12	120	72	75	279
	CLASS 7K—TACTICAL VEHICLES					
16 W95400	TRAILER CARGO+ 1/4 TON 2 WHEEL W/E	8	4	1	8	21
17 W95537	TRAILER CARGO+ 3/4 TON 2 WHEEL W/E	4	5	10	5	24
18 W95811	TRAILER CARGO+ 1-1/2 TON 2 WHEEL W/E	3	3	4	8	18
19 W98825	TRAILER TANK+ WATER 400 GALLON 1-1/2 TON 2 WHEEL W/E.	0	1	1	1	3
20 X39735	TRUCK CARGO+ 3/4 TON 4×4 W/E	5	40	43	34	122
21 X40009	TRUCK CARGO+ 2-1/2 TON 6×6 W/E	10	11	1	2	24
22 X40146	TRUCK CARGO+ 2-1/2 TON 6×6 W/WINCH W/E	1	3	4	11	19
23 X57408	TRUCK TANK+ FUEL SERVICING 2-1/2 TON 6×6 W/WINCH W/E.	2	0	0	0	2
24 X60833	TRUCK UTILITY+ 1/4 TON 4×4 W/E	8	7	7	9	31
25 X63299	TRUCK WRECKER+ 5 TON 6×6 W/WINCH W/E	1	0	0	0	1
	CLASS 7M—WEAPONS					
26 G02204	DETECTING SET MINE+ PTBL METALLIC AND NONMETALLIC.	0	2	2	3	7
27 G02341	DETECTING SET MINE+ PTBL METALLIC	0	4	4	5	13
28 L92386	MACHINE GUN 7.62 MILLIMETER+ LIGHT FLEXIBLE.	3	2	4	1	10
29 M75714	MOUNT TRIPOD MACHINE GUN+ 7.62 MILLIMETER.	3	2	4	1	10
30 N96741	PISTOL CALIBER .45 AUTOMATIC+	7	5	1	11	24
31 R94977	RIFLE 5.56 MILLIMETER+ W/E	83 (3)	203 (2)	169 (2)	181 (2)	636 (9)

Table 1-19. Summary of Equipment—Support Command, Armored, Infantry, and Infantry (Mechanized) Divisions

1	2	3	4	5	6	7	8	9	10	11	12	13	14	15	16
LIN	Nomenclature	HHD (29-2H)	AG DS co (12-7H)	Div DPU (29-590H)	Fin DS co (14-7H)	Med bn (8-35H)	Inf div (29-5H)	S&T bn Armd div (29-115H)	Inf div (mech) (29-65H)	Inf div (29-15H)	Maint bn Armd div (29-35H)	Inf div (mech) (29-25H)	Inf DISCOM total (29-1H)	Armd DISCOM total (29-21H)	Inf (mech) DISCOM total (29-11H)
	CLASS 2Q—GENERAL EQUIPMENT														
1 Z13157	CARD PUNCH MA-MACHINE+ ADPE.	0	0	8	0	0	1	1	1	0	0	0	9	9	9
2 Z15494	COLLATOR+ ADPE.....	0	0	2	0	0	0	0	0	0	0	0	2	2	2
3 Z20571	DATA TRANSCEIVER CARD UNIT+ ADPE.	0	0	2	0	0	1	1	1	1	1	1	4	4	4
4 Z20669	DATA TRANSMISSION EQUIPMENT+ ADPE.	0	0	0	0	0	1	1	1	0	0	0	1	1	1
5 Z25208	ELECTRONIC COM-	0	0	2	0	0	0	0	0	0	0	0	2	2	2
8 Z95673	VERIFIER+ ADPE.....	0	0	6	0	0	1	1	1	0	0	0	7	7	7
	CLASS 7A—AIR														
9 K31795	HELICOPTER UTILITY, UH-1H.	0	0	0	0	0	0	0	0	2	2	2	2	2	2
	CLASS 7B—GROUND SUPPORT														
10 E67735	COMP RCP PWR DRVN+ BASE AC 115V 60CY 1PH 2.7 CFM 80 PSI.	0	0	0	0	0	0	0	0	1	1	1	1	1	1
11 E69242	COMP RCP PWR DRVN+ AIR REC GAS DRVN 15 CFM 175 PSI.	0	0	0	0	1	1	1	0	2	3	3	4	5	5
12 E70064	COMP RCP PWR DRVN+ TRK 2 WHL PNEU TIRES GAS DRVN 5 CFM 175 PSI.	1	1	0	0	4	1	1	2	6	6	6	13	13	13
13 E73626	COMP RTY PWR DRVN+ AIR WHBRW FR 2 PNU TIRE GAS DRV 60 CFM 6.5 PSI.	0	0	0	0	0	0	0	0	6	6	6	3	6	6
14 F39241	CRANE WHEEL MTD+ 5 TON 3/8 CU YD DSL 4X4 ROUGH TERRN AIR TRNSPT.	0	0	0	0	0	0	0	0	4	4	4	4	4	4

Table 1–19. Summary of Equipment—Support Command, Armored, Infantry, and Infantry (Mechanized) Divisions—Continued

1	2	3	4	5	6	7	8	9	10	11	12	13	14	15	16
LIN	Nomenclature	HHD (29–2H)	AG DS co (12–7H)	Div DPU (29–590H)	Fin DS co (14–7H)	Med bn (8–35H)	Inf div (29–5H)	S&T bn Armd div (29–115H)	Inf div (mech) (29–65H)	Inf div (29–15H)	Maint bn Armd div (29–35H)	Inf div (mech) (29–25H)	Inf DISCOM total (29–1H)	Armd DISCOM total (29–21H)	Inf (mech) DISCOM total (29–11H)
15 J35835	GEN ST DSL ENG+ 15KW 60CY 3PH AC 120/208 240/416V SKID.	0	0	0	0	0	1	1	1	0	0	0	1	1	1
16 J36109	GEN ST DSL ENG+ 30KW 60CY 3PH AC 120/208 240/416V 50CY SKID.	0	1	0	0	0	0	0	0	3	2	2	4	3	3
17 J43918	GEN ST GAS ENG+ 1.5KW 60CY 1PH 2 WIRE AC 120V SHOCK.	2	1(1)	0	0	3	9	9	9	36	35	35	51(1)	53(1)	50(1)
18 J44055	GEN ST GAS ENG+ 1.5KW DC 28V SHOCK.	0	0	0	0	15	0	0	0	12	12	12	27	27	27
19 J45699	GEN ST GAS ENG+ 3KW 60CY 1-3PH 120/240V 120/208V SKID SHOCK.	0	0	0	0	1	1	1	1	1	1	1	15	15	15
20 J47068	GEN ST GAS ENG+ 5KW 60CY 1-3PH AC 120 240 120/208V SKD-SHK MTD.	0	0	0	1	0	1	1	1	6	6	6	11	11	11
21 J49055	GEN ST GAS ENG+ 7.5 KW DC 28.5V WHL MTD.	0	0	0	0	0	0	0	0	1	1	1	0	0	0
22 P96640	PUMPING ASSEMBLY FLAMMABLE LIQUID BULK TRANSFER+.	0	0	0	0	0	8	8	8	0	0	0	8	8	8
23 X48914	TRUCK LIFT FORK+ DSL DRVN 6000 LB CAP ROUGH TERRAIN.	0	0	0	0	0	3	3	3	2	2	2	5	5	5
	CLASS 7G—ELECTRONICS														
24 Q32756	RADIO SET+ AN/GRC-106.	0	0	0	0	0	0	0	0	0	0(3)	0	0	0(3)	0
25 Q42092	RADIO SET+ AN/URC-10.	0	0	0	0	0	0	0	0	2	2	2	2	2	2
26 Q53001	RADIO SET AN/VRC-46	2	0	1	0	6	9	9	9	6	6(3)	6	23	23(3)	23
27 Q54154	RADIO SET AN/VRC-47	3	0	0	0	10	5	5	5	7	7	7	25	25	25
28 Q56783	RADIO SET AN/VRC-64	0	0	0	0	0	1	1	1	0	0	0	1	1	1

29	U81707	SWITCHBOARD TELEPHONE MANUAL+ SB-22/PT.	1	0	0	0	1	3	3	3	2	2	2	7	7	7
30	U82529	SWITCHBOARD TELEPHONE MANUAL+ SB-993/GT	0	1	0	1	4	1	1	1	4	4	4	11	11	11
31	V30252	TELEPHONE SET+ TA-1/PT.	0	5	0	5	0	0	0	0	0	0	0	10	10	10
32	V30937	TELEPHONE SET+ TA-264/PT.	0	0	0	0	5	0	0	0	0	0	0	5	5	5
33	V31211	TELEPHONE SET+ TA-312/PT.	9	15	4	5	24	46(4)	46(4)	46(4)	44	41	44	146(4)	146(4)	149(4)
		CLASS 7K—TACTICAL VEHICLES														
34	E02670	CHASSIS TRAILER+ GENERAL PURPOSE 3-1/2 TON 2 WHEEL W/E.	0	0(2)	3	0	0	0	0	0	1	1	1	6(2)	6(2)	6(2)
35	E02807	CHASSIS TRAILER+ GENERATOR 2-1/2 TON 2 WHEEL W/E.	0	1	0	1	0	0	0	0	3	2	2	4	3	3
36	K90188	INSTRUMENT REPAIR SHOP TRUCK MOUNTED+ 2-1/2 TON 6×6 W/E.	0	0	0	0	0	0	0	0	12	12	12	12	12	12
37	S70243	SEMITRAILER LOW BED+ WRECKER 12 TON 4 WHEEL 40 FT W/E.	0	0	0	0	0	0	0	0	1	1	1	1	1	1
38	S72024	SEMITRAILER STAKE+ 12 TON 4 WHEEL W/E.	0	0	0	0	0	21	21	21	17	16	16	38	37	37
39	S72983	SEMITRAILER TANK+ FUEL SERVICING 5000 GALLON 12 TON 4 WHEEL W/E.	0	0	0	0	0	18	30	25	0	0	0	18	30	25
40	S73394	SEMITRAILER TANK TRANSPORTER+ 50 TON 8 WHEEL W/E.	0	0	0	0	0	0	0	0	2	6	6	2	6	6
41	S74079	SEMITRAILER VAN+ CARGO 12 TON 4 WHEEL W/E.	0	0	0	0	0	0	0	0	9	9	9	9	9	9
42	S74490	SEMITRAILER VAN+ EXPANSIBLE 6 TON 4 WHEEL W/E.	0	1	6	0	0	1(3)	1(3)	1(3)	1	1	1	10(3)	10(3)	10(3)
43	W95400	TRAILER CARGO+ 1/4 TON 2 WHEEL W/E.	6	5(1)	1	2	22	17	17	17	24	26	26	76(1)	78(1)	78(1)
44	W95537	TRAILER CARGO+ 3/4 TON 2 WHEEL W/E.	2	2	0	1	14	12(14)	12(14)	12(14)	19	20	21	50(14)	51(14)	52(14)

Table 1-19. Summary of Equipment—Support Command, Armored, Infantry, and Infantry (Mechanized) Divisions—Continued

1	2	3	4	5	6	7	8	9	10	11	12	13	14	15	16
LIN	Nomenclature	HHD (29-2H)	AG DS co (12-7H)	Div DPU (29-590H)	Fin DS co (14-7H)	Med bn (8-35H)	Inf div (29-5H)	S&T bn Armd div (29-115H)	Inf div (mech) (29-65H)	Inf div (29-15H)	Maint bn Armd div (29-35H)	Inf div (mech) (29-25H)	Inf DISCOM total (29-1H)	Armd DISCOM total (29-21H)	Inf (mech) DISCOM total (29-11H)
45 W95811	TRAILER CARGO+ 1-1/2 TON 2 WHEEL W/E.	2	5	1	0	34	79(10)	78(10)	78(10)	79	82	78	188(10)	202(10)	198(10)
46 W98825	TRAILER TANK+ WATER 400 GALLON 1-1/2 TON 2 WHEEL W/E.	1	1	0	1	8	2	2	2	6	6	6	19	19	19
47 X38776	TRUCK AMBULANCE+ 3/4 TON 4×4 W/E.	0	0	0	0	32(4)	0	0	0	0	0	0	32(4)	32(4)	32(4)
48 X39735	TRUCK CARGO+ 3/4 TON 4×4 W/E.	3	3(1)	0	1	14	14(14)	14(14)	14(14)	21	21	21	56(15)	56(15)	56(15)
49 X39872	TRUCK CARGO+ 3/4 TON 4×4 W/WINCH W/E.	0	0	0	0	4	0	0	0	0	0	0	4	4	4
50 X40009	TRUCK CARGO+ 2-1/2 TON 6×6 W/E.	3	4(1)	1	1	31	73(9)	73(9)	73(9)	61	66	60	159(10)	180(10)	174(10)
51 X40146	TRUCK CARGO+ 2-1/2 TON 6×6 W/WINCH W/E.	0	0	0	0	11	10(1)	10(1)	10(1)	13	7	13	40(1)	28(1)	34(1)
52 X57271	TRUCK TANK+ FUEL SERVICING 2-1/2 TON 6×6 W/E.	0	0	0	0	0	0	0	0	2	2	2	2	2	2
53 X59052	TRUCK TRACTOR 2-1/2 TON 6×6 W/E.	0	0	0	0	0	0	0	0	2	2	2	1	1	1
54 X59189	TRUCK TRACTOR+ 2-1/2 TON 6×6 W/WINCH W/E.	0	0	0	0	0	0	0	0	1	1	1	1	1	1
55 X59326	TRUCK TRACTOR+ 5 TON 6×6 W/E.	0	0	4	0	0	30	42	37	45	43	43	82	92	87
56 X59463	TRUCK TRACTOR+ 5 TON 6×6 W/WINCH W/E.	0	0	0	0	0	0	0	0	1	1	1	1	1	1
57 X59600	TRUCK TRACTOR+ 10 TON 6×6 W/DUAL MIDSHIP WN W/HI MTD 5TH WHL W/E.	0	0	0	0	0	0	0	0	2	6	6	2	6	6
58 X60696	TRUCK TRACTOR WRECKER+ 5 TON 6×6 W/WINCH W/E.	0	0	0	0	0	0	0	0	1	1	1	1	1	1
59 X60833	TRUCK UTILITY+ 1/4 TON 4×4 W/E.	9	5(1)	1	2	25	17	17	17	30	32	32	82(1)	87(1)	87(1)
60 X62340	TRUCK VAN+ SHOP 2-1/2 TON 6×6 W/E.	0	2(2)	3	0	0	0	0	0	33	34	34	38(2)	39(2)	39(2)

61	X62477	TRUCK VAN+ SHOP 2-1/2 TON 6×6 W/ WINCH W/E.	0	0	0	0	0	0	0	0	1	1	1	1	1	1
62	X63299	TRUCK WRECKER+ 5 TON 6×6 W/WINCH W/E.	0	0	0	0	0	3	3	3	8	8	8	8	11	11
		CLASS 7M—WEAPONS														
63	G02204	DETECTING SET MINE+ PTBL METALLIC AND NON-METALLIC.	0	0	0	0	0	0	0	0	2	2	2	2	2	2
64	G02341	DETECTING SET MINE+ PTBL METALLIC.	0	0	0	0	0	0	0	0	2	2	2	2	2	2
65	L91975	MACHINE GUN CAL .50+ HB FLEX FOR GND USE.	0	0(4)	0	0	0	0	0	0	0	0	0	0(4)	0(4)	0(4)
66	L92386	MACHINE GUN 7.62 MILLIMETER+ LT FLEX.	2	10	2	4	0	30(1)	33(1)	31(1)	18	18	18	69(1)	69(1)	67(1)
67	M75577	MOUNT TRIPOD MG+ HEAVY CALIBER .50.	0	0(4)	0	0	0	0	0	0	0	0	0	0(4)	0(4)	0(4)
68	M75714	MOUNT TRIPOD MACHINE GUN+ 7.62 MILLIMETER.	2	10	2	4	0	30(1)	33(1)	31(1)	18	18	18	69(1)	69(1)	67(1)
69	N96741	PISTOL CALIBER .45 AUTOMATIC+	8	12	1	7	41	8	8	8	11	11	11	92	92	92
70	R50680	RECOVERY VEHICLE FULL TRACKED+ MEDIUM.	0	0	0	0	0	0	0	0	4	4	4	4	4	4
71	R91244	REVOLVER CALIBER .38+ 4 INCH BARREL.	0	0	0	0	0	0	0	0	15	14	14	15	14	14
72	R94977	RIFLE 5.56 MILLIMETER+ W/E.	48(2)	253(38)	60	106(1)	350(21)	404(174)	434(157)	425(173)	904(12)	938(71)	902(57)	2023 (248)	2232 (290)	2172 (292)
		CLASS 7Q— GENERAL EQUIPMENT														
73	J04716	FUEL SYSTEM SUPPLY POINT+ PORTABLE 6000 GAL CAP.	0	0	0	0	0	1	1	1	0	0	0	1	1	1
74	T10138	SHOP EQUIP CONTACT MAINT TRK MTD+.	0	0	0	0	0	0	0	0	1	1	1	1	1	1
75	T10275	SHOP EQUIP ELEC REP SEMITRLR MTD+ ARMY.	0	0	0	0	0	0	0	0	1	1	1	1	1	1

Table 1–19. Summary of Equipment—Support Command, Armored, Infantry, and Infantry (Mechanized) Divisions—Continued

1 LIN	2 Nomenclature	3 HHD (29–2H)	4 AG DS co (12–7H)	5 Div DPU (29–590H)	6 Fin DS co (14–7H)	7 Med bn (8–35H)	8 Inf div (29–5H)	9 S&T bn Armd div (29–115H)	10 Inf div (mech) (29–65H)	11 Inf div (29–15H)	12 Maint bn Armd div (29–35H)	13 Inf div (mech) (29–25H)	14 Inf DISCOM total (29–1H)	15 Armd DISCOM total (29–21H)	16 Inf (mech) DISCOM total (29–11H)
76 V12141	TANK AND PUMP UNIT LIQUID DISPENSING TRUCK-MOUNTING+.	0	0	0	0	0	8	8	8	2	2	2	10	10	10
77 V19950	TANK UNIT LIQUID DISPENSING TRAILER MOUNTING+.	0	0	0	0	0	8	8	8	0	0	0	8	8	8

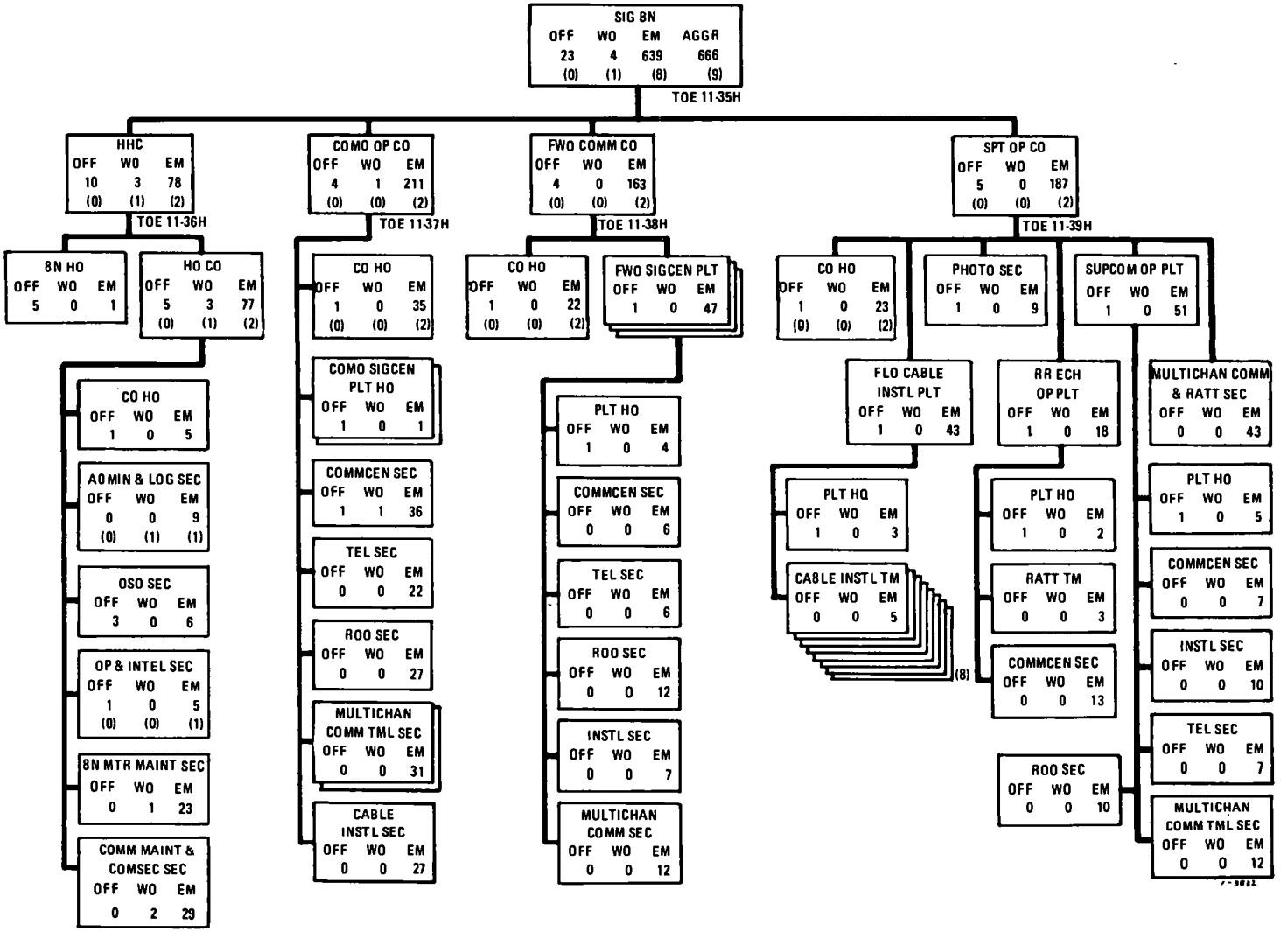

Figure 1–20. Signal battalion, armored, infantry, and infantry (mechanized) divisions.

1. MISSION

a. To install, operate, and maintain a division communication system for support of division-level functions, including command, control, intelligence, firepower, and combat service support.

b. To provide internal CP communications at all echelons of division HQ, including DISCOM and division rear echelon.

c. To provide special staff and technical assistance for planning and control of all division communications by the division commander and staff.

d. To provide direct support communication security logistics for the division.

e. To provide photographic service (excluding airphotography and development of color and motion-picture film) for the division.

2. ASSIGNMENT

a. Organic to armored division, TOE 17H.

b. Organic to infantry division, TOE 7H.

c. Organic to infantry division (mechanized), TOE 37H.

3. CAPABILITIES

a. Provides command multichannel telephone and teletypewriter circuits from echelons of division HQ to division artillery, DISCOM, brigades, aviation elements, and other major subordinate units, as directed.

b. Provides internal communication facilities for the various CP operated by division HQ.

c. Provides multichannel telephone and teletypewriter circuits among echelons of division HQ, DISCOM, and signal centers for alternate command communications and support of the division combat service support function.

d. Provides internal communication facilities for the DISCOM CP and signal centers.

e. Provides field wire and/or cable circuits between DISCOM and its major subordinate units and between area centers and separate combat organizations and combat service support installations, as directed within the capabilities stated for the various companies of the battalion.

f. Provides RATT and voice radio terminals at division command echelons and major subordinate units for operation of division radio nets.

g. Provides division motor messenger service to major subordinate commands.

h. Provides ground still- and motion-picture photography for the division and operates a mobile photographic laboratory.

i. Provides direct support communication security for the division.

j. Provides radio-wire-integration stations at all echelons of division HQ (except division rear), alternate CP, DISCOM, and at three forward area signal centers.

k. Performs organizational and direct support maintenance on mission-essential communication equipment organic to the battalion.

4. MOBILITY

Mobility of units organic to this battalion is included in appropriate component TOE extracts.

Figure 1-20—Continued

TOE 11-36H HHC, SIG BN

1. MISSION

a. To plan, direct, and coordinate operations and training of a division signal battalion and to provide command, control, and administrative and logistic support for the battalion.

b. To provide division HQ a signal officer, a signal staff, and staff facilities.

c. To provide direct support communication security logistics for the division.

2. ASSIGNMENT

Organic to signal battalion, armored, infantry, or infantry (mechanized) division, TOE 11-35H.

3. CAPABILITIES

a. Provides control, staff planning, and supervision of operations and training of a division signal battalion.

b. Provides a signal officer with communication staff planning facilities for division HQ.

c. Provides organizational maintenance for vehicles and power generators organic to the battalion, to include organizational maintenance for vehicles and power generators organic to HHC.

d. Provides unit administration, supply, and organizational maintenance for organic arms of HHC.

e. Provides direct support communication security logistics for the division.

f. Performs organizational and direct support maintenance for mission-essential communication equipment organic to the battalion.

4. MOBILITY

Eighty-percent mobile in organic vehicles.

TOE 11-37H COMD OP CO, SIG BN

1. MISSION

a. To provide internal communication facilities for the division command echelons.

b. To provide multichannel terminals at the command echelons of division HQ.

c. To provide signal center service for units located in the vicinity of the division command echelons.

2. ASSIGNMENT

Organic to signal battalion, armored, infantry, or infantry (mechanized) division, TOE 11-35H.

3. CAPABILITIES

a. Provides communication center facilities and messenger service for the various division HQ command echelons.

b. Provides two manual telephone central office sets for switching trunk and local telephone subscribed circuits.

c. Provides facsimile service.

d. Provides a radio-wire-integration facility to establish signal communications between mobile FM radio station and telephone operation facilities.

e. Provides multichannel communication system terminals at command echelons of the division and at division artillery HQ.

f. Provides three mobile secure RATT stations, single sideband and CW/voice radio stations, and FM/voice radio stations for operation in the division radio nets.

g. Provides wire installation teams to install local telephone circuits at the command echelons of the division.

h. Performs organizational maintenance on organic arms, vehicles, power generators, and multichannel and telephone communication equipment.

i. Provides a mess facility for 24-hour operation, to include mess support for the battalion HHC.

j. Depends on the signal support operations company, organic to the division signal battalion, for installation of cable circuits between multichannel communication system terminals and CP's.

4. MOBILITY

Eighty-five-percent mobile in organic vehicles.

Figure 1–20—Continued

1. MISSION

a. To provide division communication facilities and to terminate division communication systems in the forward areas of a division zone of operations.

b. To provide division multichannel communication system terminals at brigade command echelons and at command echelons of other divisional major subordinate units, as directed.

2. ASSIGNMENT

Organic to signal battalion, armored, infantry, or infantry (mechanized) division, TOE 11-35H.

3. CAPABILITIES

a. Operates three area signal centers, which provide–

(1) Secure teletypewriter terminal facilities and limited motor messenger service to units in the area.

(2) A RATT station for operation in a division net.

(3) Division telephone switchboard service for supported units in the area.

(4) A radio-wire-integration facility to connect mobile FM radio stations in the area to the division net.

(5) Division multichannel communication system terminals to afford telephone and teletypewriter access from the forward area to DISCOM and brigade command echelons.

(6) Multichannel communication facilities to terminate the division multichannel communication systems at the command echelons of three brigades.

(7) Radio-relay and telephone equipment.

b. Performs organizational maintenance on organic arms, vehicles, and power generators. (Organizational maintenance of other categories of communication equipment will be performed by maintenance personnel assigned to the battalion maintenance section (TOE 11-36H).)

c. Provides mess facilities for 24-hour operation.

4. MOBILITY

Ninety-percent mobile in organic vehicles.

Figure 1-20—Continued

1. MISSION

a. To provide communication facilities for DISCOM HQ and the rear echelon of division HQ.

b. To provide signal center service to units located in the vicinity of DISCOM HQ and division rear echelon.

c. To provide field cable construction and multichannel communication terminals and repeater stations in support of other units of the division signal battalion.

d. To provide photographic services (except airphotography and the processing of exposed color and motion-picture film) for a division.

2. ASSIGNMENT

Organic to signal battalion, armored, infantry, or infantry (mechanized) division, TOE 11-35H.

3. CAPABILITIES

a. A DISCOM HQ signal center provides–

(1) Secure teletypewriter terminal facilities for operation in the division system.

(2) Two RATT stations in the division nets.

(3) Division telephone switchboard service for supported units in the area.

(4) A radio-wire-integration facility to provide access to the division telephone system.

(5) Division multichannel communication system terminals to provide telephone and teletypewriter circuits from DISCOM to division command echelons and forward areas.

b. A division rear echelon signal element provides–

(1) Secure teletypewriter terminal facilities for operation in the division system.

(2) Division telephone switchboard service for supported units in the area.

(3) A RATT station in a division net.

c. Provides ground still- and motion-picture photography for the division and operates a mobile photographic laboratory (except for airphotography and the processing of color and motion-picture film).

d. Installs, maintains, and recovers field cable circuits from division command echelons to major subordinate units and from multichannel communication terminals to CP's, as directed.

e. Provides division multichannel system terminals at division artillery and aviation elements and repeaters to augment the division communication system, as directed.

f. Performs organizational maintenance on organic arms, vehicles, power generators, and telephone equipment. (Organizational maintenance of other categories of organic communication equipment will be performed by signal maintenance personnel assigned to HHC (TOE 11-36H).)

g. Provides four RATT stations to support division artillery and aviation elements.

h. Provides mess facilities for 24-hour operation.

4. MOBILITY

Eighty-five-percent mobile in organic vehicles.

Figure 1–20—Continued

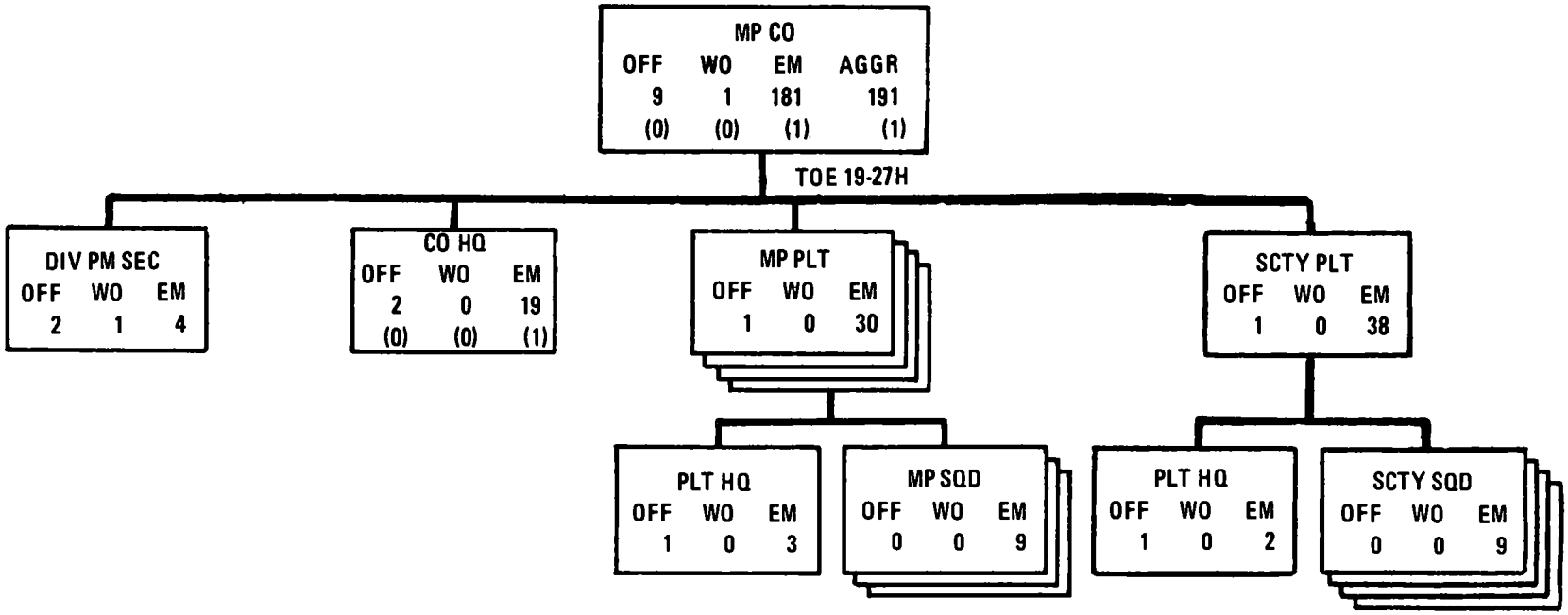

1. MISSION

To provide military police combat support to armored, infantry, and infantry (mechanized) divisions.

2. ASSIGNMENT

a. Organic to armored division, TOE 17H.

b. Organic to infantry division, TOE 7H.

c. Organic to infantry division (mechanized), TOE 37H.

3. CAPABILITIES

a. Provides a provost marshal section to division HQ.

b. Provides circulation control of vehicular traffic, refugees, and individuals as well as population and resources control and control of lines of communication.

c. Establishes motor patrol circulation and control posts.

d. Provides route reconnaissance, convoy escort, and security of high-priority shipments and movements.

e. Conducts crime investigation and institutes crime prevention measures within the division.

f. Provides temporary detention for U.S. military prisoners and operates a central prisoner of war and civilian internee collecting point.

g. Provides security for prisoners of war and civilian internees during evacuation from forward collecting points.

h. Provides support in the maintenance of discipline, law and order.

i. Provides security for division CP and personal security for designated personnel.

4. MOBILITY

One hundred-percent mobile in organic vehicles.

Figure 1-21. Military police company, armored, infantry, and infantry (mechanized) divisions.

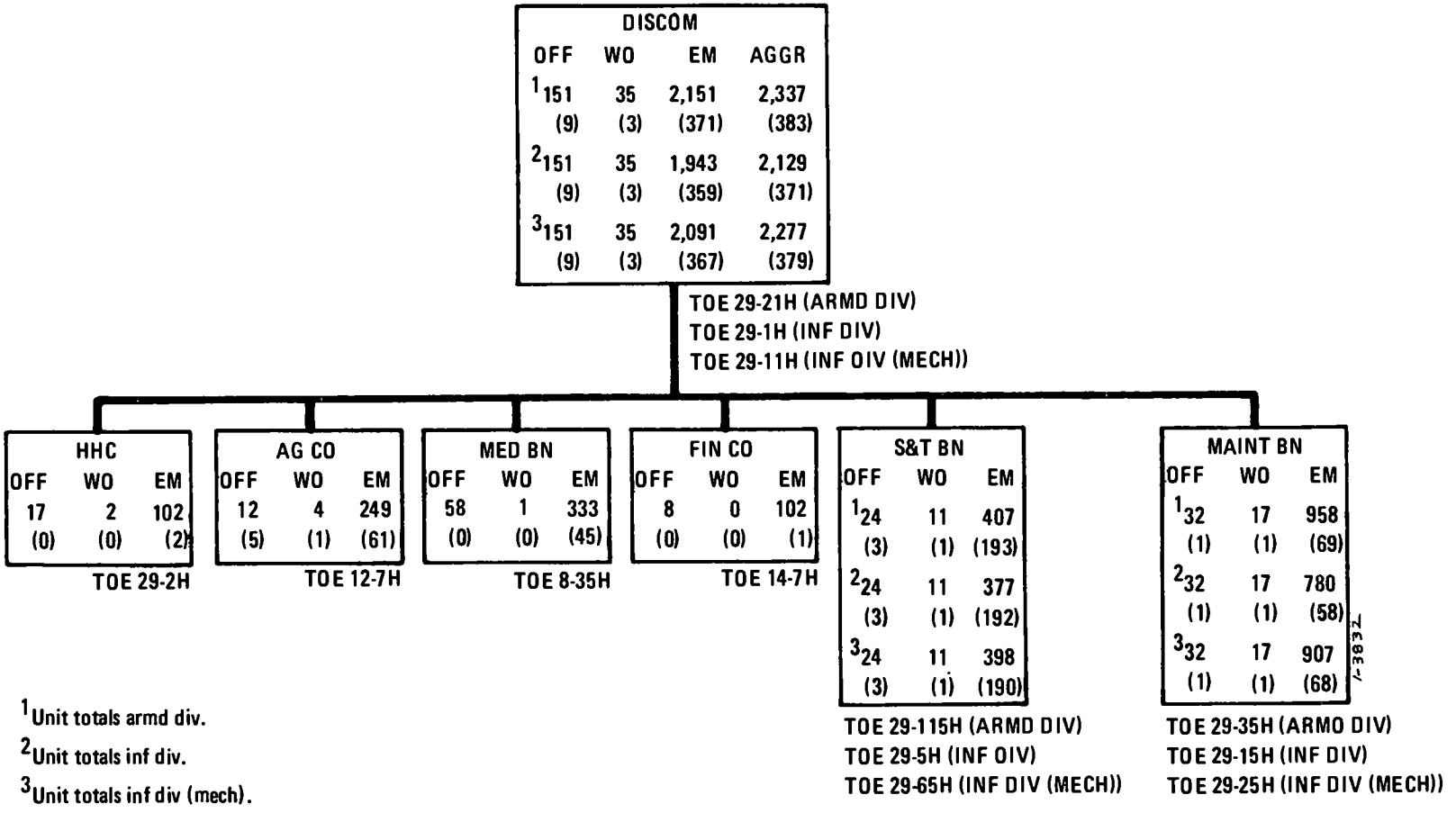

Figure 1–22. Support command, armored, infantry, and infantry (mechanized) divisions.

1. MISSION

To provide division-level combat service support, except for water supply, communication security equipment, and construction, to all organic and attached elements of the division.

2. ASSIGNMENT

a. Organic to armored division, TOE 17H.

b. Organic to infantry division, TOE 7H.

c. Organic to infantry division (mechanized), TOE 37H.

3. CAPABILITIES

a. Provides division-level logistic support of classes I, II, III, IV, VI, VII, and IX supplies, excluding water supply and communication security equipment.

b. Provides direct support maintenance, except for medical and communication security equipment.

c. Provides division-level medical services, including evacuation, establishment and operation of clearing stations, emergency dental treatment, medical supply, and organizational medical equipment maintenance, for units organic to or attached to the division.

d. Provides automatic data processing support for logistics and personnel administration.

e. Possesses a limited capability to carry reserve supplies.

f. Advises the division commander and staff on all supply and maintenance matters, except for construction, communication security equipment, and water supply.

g. Provides map supply service for the division and attached units.

h. Furnishes music for division functions.

i. Controls class V supplies.

j. Operates salvage collecting points.

k. Provides bath, clothing exchange, and graves registration services for the division, when augmented.

4. MOBILITY

Mobility of units organic to the DISCOM is included in appropriate component TOE extracts.

Figure 1–22—Continued

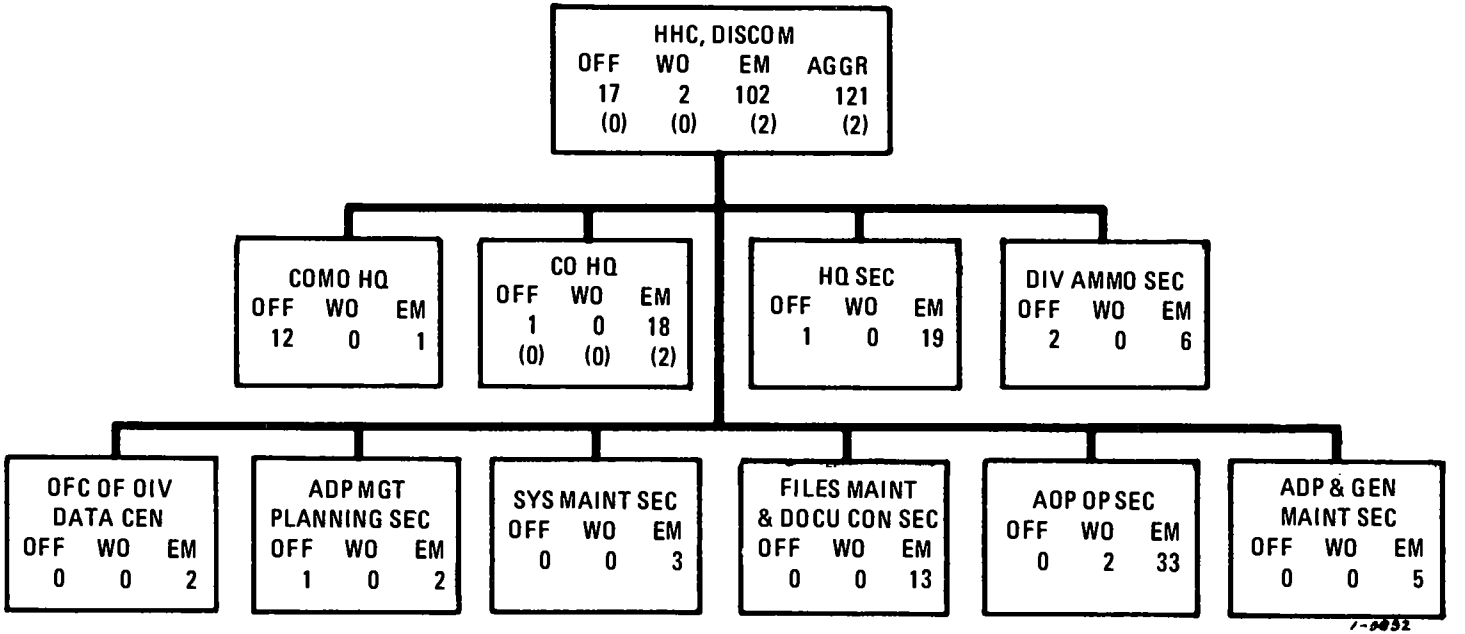

1. MISSION

a. To command and control DISCOM organic and attached units.

b. To furnish automatic data processing support to assist in accomplishing the logistic and personnel administrative functions of the DISCOM.

2. ASSIGNMENT

a. Organic to support command, armored division, TOE 29-21H.

b. Organic to support command, infantry division, TOE 29-1H.

c. Organic to support command, infantry division (mechanized), TOE 29-11H.

3. CAPABILITIES

a. Commands and controls DISCOM organic and attached units.

b. Plans, directs, and supervises combat service support (except communication security, construction, and water supply) for the division and other designated forces.

c. Provides combat service support information and advice to the division commander and his staff, except for communication security, construction, and water supply.

d. Exercises administrative control over ammunition supply for the division and attached units.

e. Plans, coordinates, and supervises rear area protection activities in its assigned area of responsibility.

f. Provides operational automatic data processing support for logistic and personnel administrative functions of supported units.

g. Performs organizational maintenance on organic equipment (except radios) and on wheeled vehicles of the finance company.

h. Depends on the AG company for personnel services and on the finance company for finance services.

4. MOBILITY

Fifty-percent mobile in organic vehicles.

Figure 1–23. HHC, support command, armored, infantry, and infantry (mechanized) divisions.

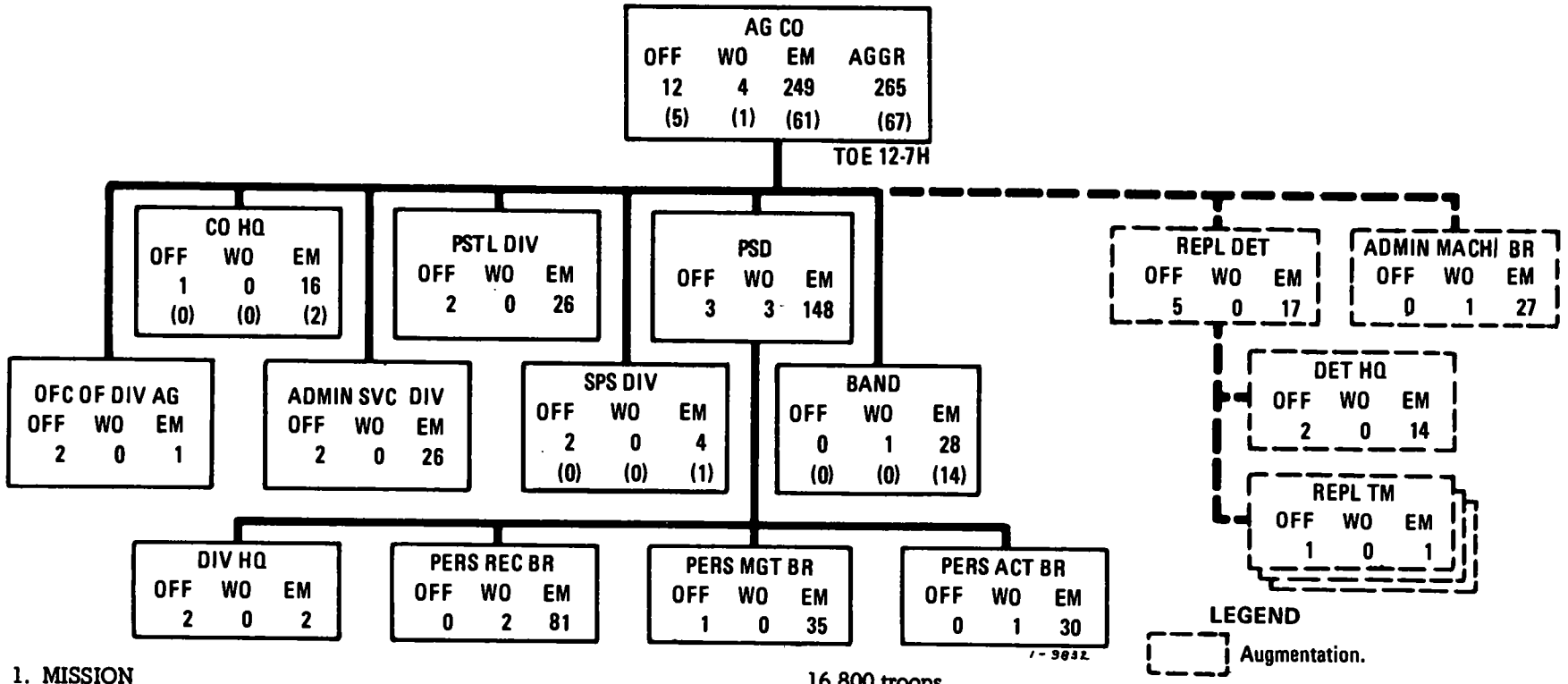

1. MISSION

a. To provide centralized personnel and administrative support services, less finance service, to all personnel and units assigned or attached to the division.

b. To promote and maintain the morale and *esprit de corps* of troops by providing suitable music for military formations, light concerts, and recreational activities.

c. To provide an element of division HQ rear echelon.

2. ASSIGNMENT

a. Organic to support command, armored division, TOE 29-21H.

b. Organic to support command, infantry division, TOE 29-1H.

c. Organic to support command, infantry division (mechanized), TOE 29-11H.

3. CAPABILITIES

a. Provides centralized personnel and administrative support for all personnel and units assigned or attached to a division of approximately 16,800 troops.

b. Provides logistic support of and plans for tactical security of the elements assigned to the company.

c. Provides company-level personnel and administrative support for personnel assigned to the company.

d. Provides mess facilities for personnel assigned or attached to the company.

e. Provides the following types of music:

(1) Military.

(2) Dance (one dance band and one combo).

(3) Miscellaneous (radio/TV small music combinations and stage shows).

f. Performs organizational maintenance on organic equipment.

4. MOBILITY

Twenty-percent mobile in organic vehicles.

Figure 1-24. AG direct support company, support command, armored, infantry, and infantry (mechanized) divisions.

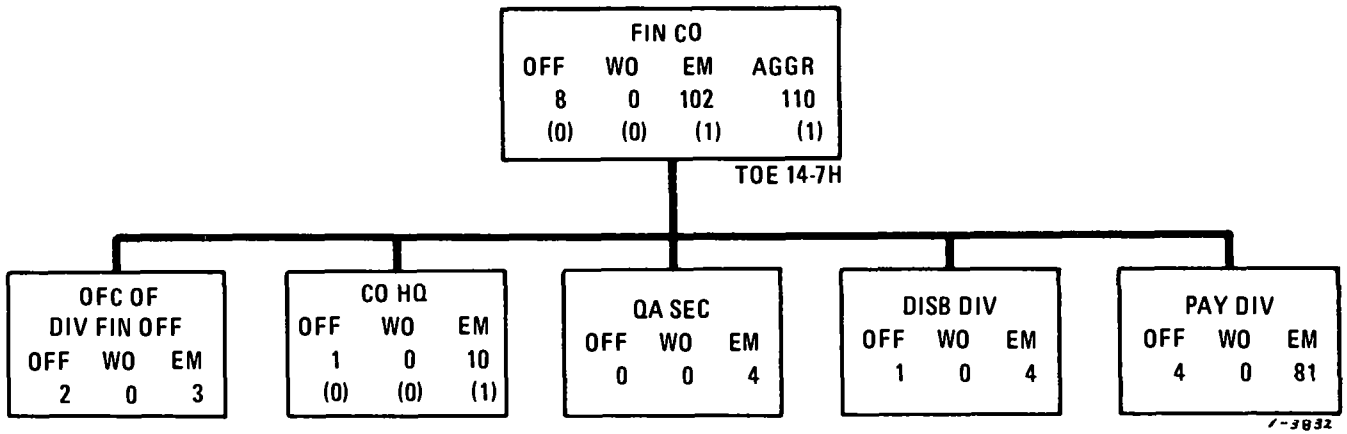

1. MISSION

To provide finance direct support services to all units assigned or attached to the division.

2. ASSIGNMENT

a. Organic to support command, armored division, TOE 29-21H.

b. Organic to support command, infantry division, TOE 29-1H.

c. Organic to support command, infantry division (mechanized), TOE 29-11H.

3. CAPABILITIES

a. Provides finance direct support services to divisional elements and assigned personnel, to include military pay, quality assurance, and financial disbursing.

b. Forms forward support teams to provide financial services to divisional elements located in forward areas, as required.

c. Supports approximately 16,600 troops.

4. MOBILITY

Five-percent mobile in organic vehicles.

Figure 1–25. Finance direct support company, support command, armored, infantry, and infantry (mechanized) divisions.

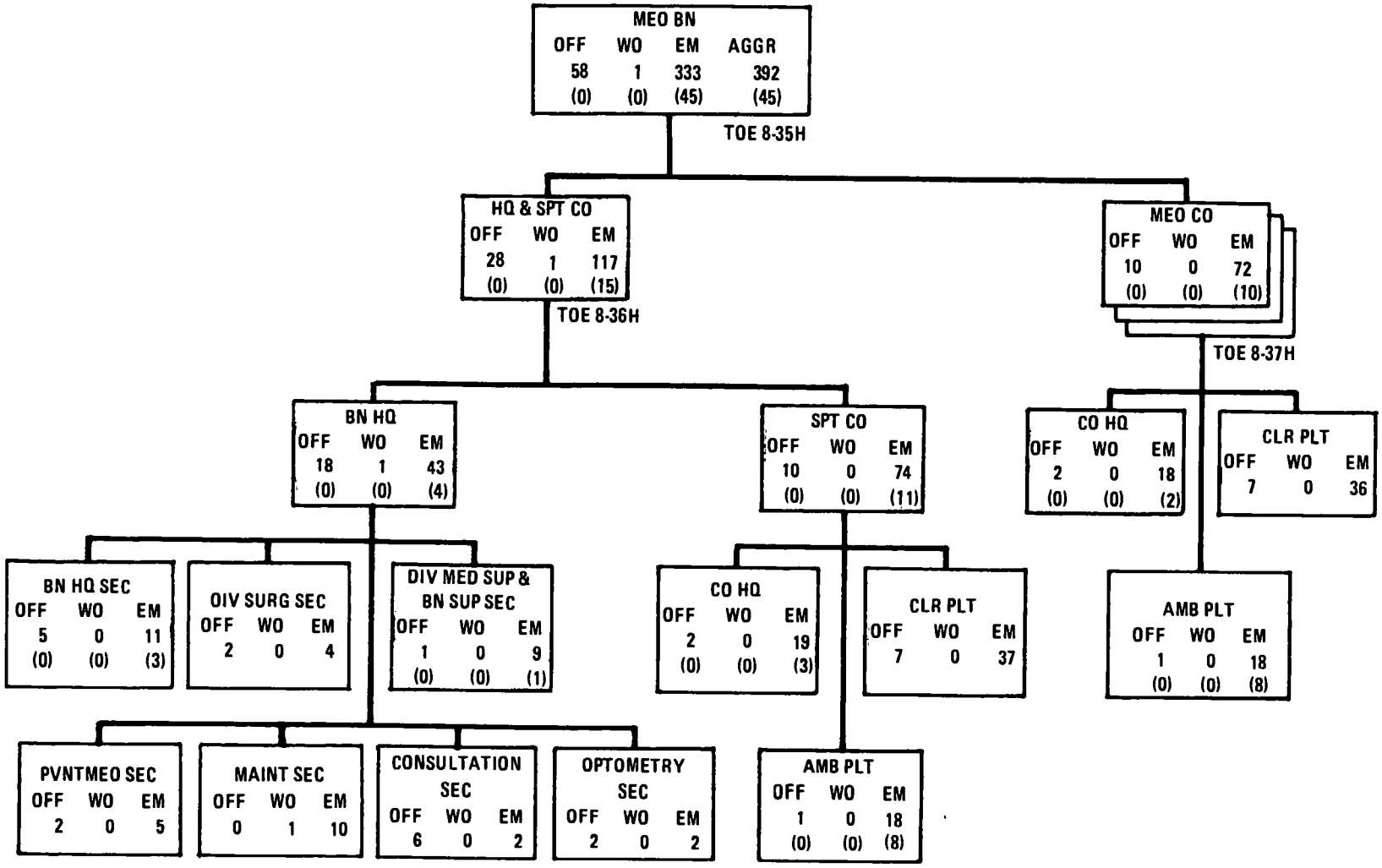

Figure 1–26. Medical battalion, support command, armored, infantry, and infantry (mechanized) divisions.

TOE 8-35H MED BN

1. MISSION

To provide division-level medical support and unit-level medical support, as required, for all assigned and attached elements of the division.

2. ASSIGNMENT

a. Organic to support command, armored division, TOE 29-21H.

b. Organic to support command, infantry division, TOE 29-1H.

c. Organic to support command, infantry division (mechanized), TOE 29-11H.

3. CAPABILITIES

a. Operates division clearing stations with a limited short-term holding capacity.

b. Provides patient evacuation.

c. Provides expedient dental treatment.

d. Provides psychiatric service.

e. Provides optometric service.

f. Provides unit-level medical support, as required, on an area basis.

g. Provides medical supply service and organizational maintenance of medical equipment.

4. MOBILITY

One hundred-percent mobile in organic vehicles.

TOE 8-36H HQ & SPT CO, MED BN

1. MISSION

a. To provide command, control, administration, and logistic support for the medical battalion and to plan for its employment.

b. To provide division-level and unit-level medical support, as required, on an area basis to divisional units operating in the division rear area.

c. To advise the division commander and staff concerning the health of the command and to provide supervision of all medical activities in the division.

2. ASSIGNMENT

Organic to medical battalion, armored, infantry, or infantry (mechanized) division, TOE 8-35H.

3. CAPABILITIES

a. Provides command, control, administration, and supervision of and planning for division-level and unit-level medical support rendered by elements of the medical battalion and attached units.

b. Provides division-level medical supply support and performs organizational medical equipment maintenance for units organic or attached to the division.

c. Provides advice to the division commander and staff concerning the health of the command and the command aspects of medical matters affecting combat effectiveness and combat operations.

d. Provides staff supervision, to include technical control, of all medical support activities in the division.

e. Conducts programs of prevention in the areas of medicine, mental health, and dentistry.

f. Provides optometric service and presurfaced single-vision prescription fabrication and repair services for units organic or attached to the division.

g. Provides intradivisional transport of medical supplies and equipment.

h. Receives, sorts, and temporarily provides medical and surgical treatment for 80 patients. For a limited period, under extreme conditions, can provide emergency medical treatment for a total of 120 patients.

i. Provides emergency dental treatment.

j. Provides psychiatric treatment.

k. Evacuates patients from supported unit aid stations.

l. Furnishes unit-level medical support on an area basis to divisional units having no organic medical element.

m. Serves as a unit replacement, when necessary, for one of the medical companies supporting a brigade.

n. Individuals of this unit are provided weapons for personal defense and for protection of the wounded and sick in their charge.

o. Performs organizational maintenance on organic equipment.

p. Operates on a two-shift basis.

4. MOBILITY

One hundred-percent mobile in organic vehicles.

Figure 1-26—Continued

1. MISSION

To provide division-level and unit-level medical support, as required, on an area basis to divisional units operating in the brigade area.

2. ASSIGNMENT

Organic to medical battalion, armored, infantry, or infantry (mechanized) division, TOE 8-35H.

3. CAPABILITIES

a. Provides expedient dental treatment.

b. Receives, sorts, and temporarily provides medical and surgical treatment for 80 patients. For a limited period, under extreme conditions, can provide emergency medical treatment for a total of 120 patients.

c. Provides psychiatric treatment.

d. Evacuates patients from supported unit aid stations.

e. Furnishes unit-level medical support on an area basis to divisional units having no organic medical element.

f. Provides intradivisional transport of medical supplies and equipment.

g. Clearing station and evacuation elements must be augmented when the company is required to support more than five combat battalions.

h. Individuals of this unit are provided weapons for personal defense and for protection of the wounded and sick in their charge.

i. Performs organizational maintenance on organic equipment, less medical.

j. Operates on a two-shift basis.

4. MOBILITY

One hundred-percent mobile in organic vehicles.

Figure 1-26—Continued

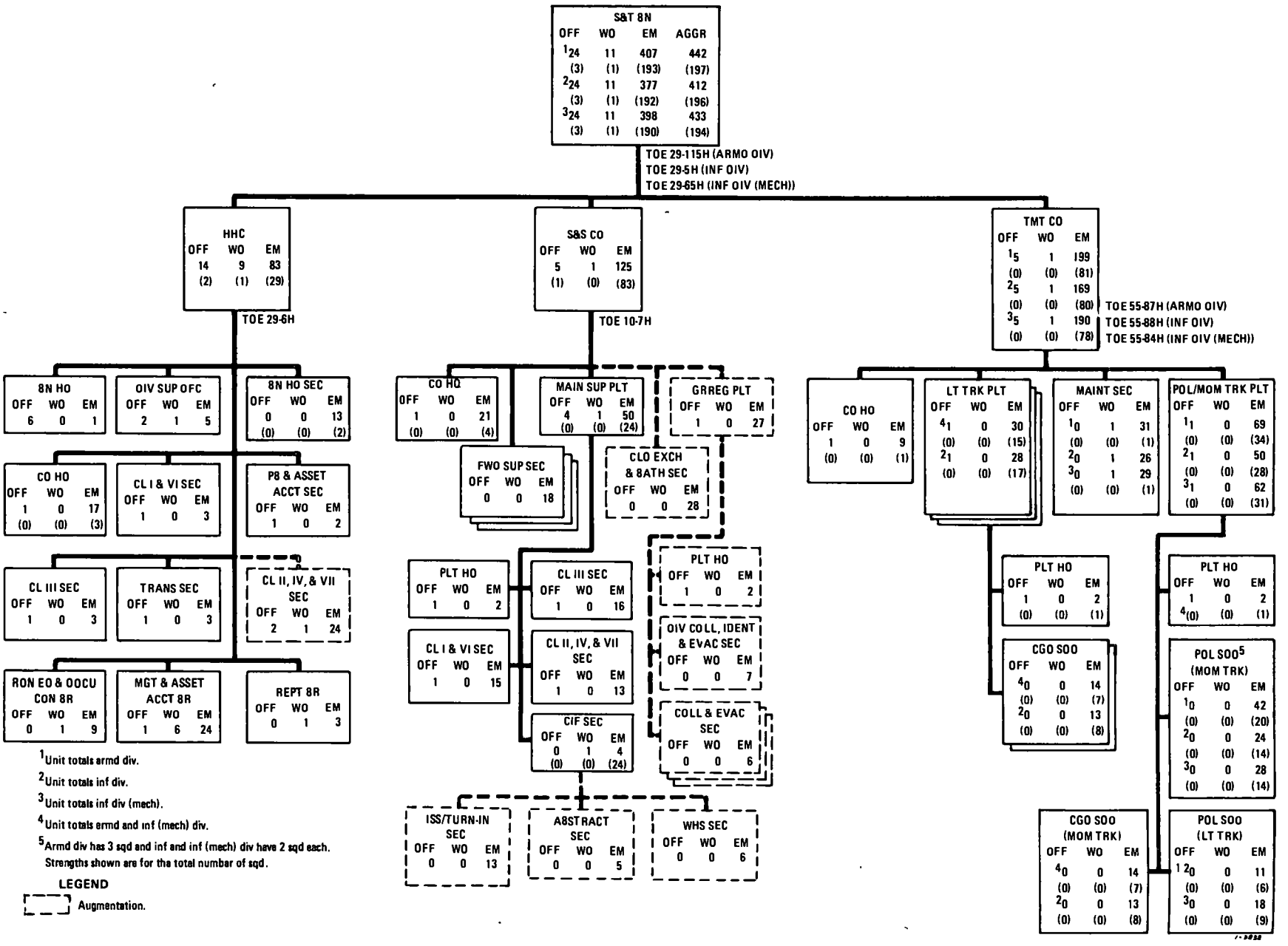

Figure 1–27. Supply and transport battalion, support command, armored, infantry, and infantry (mechanized) divisions.

TOE 29-115H S&T BN, ARMD DIV
TOE 29-5H S&T BN, INF DIV
TOE 29-65H S&T BN, INF DIV (MECH)

1. MISSION

a. To support the division and attached units by providing all classes of supply, except classes V, VIII, IX, and X and those associated with communication security equipment, marine- and rail-peculiar equipment, and items peculiar to airdrop.

b. To provide graves registration service, clothing exchange, and bath service, when augmented; classification and disposal of unserviceable equipment; and map supply service.

c. To provide and operate ground transportation to provide for unit distribution of the supplies for which the unit is responsible and to supplement means available to other elements of the division.

d. To maintain and transport the division reserve of supplies for which the unit is responsible.

2. ASSIGNMENT

a. Organic to support command, armored division, TOE 29-21H.

b. Organic to support command, infantry division, TOE 29-1H.

c. Organic to support command, infantry division (mechanized), TOE 29-11H.

3. CAPABILITIES

a. Provides all classes of supplies to the division and attached units, except class V, VIII, IX, and X and those associated with communication security equipment, marine- and rail-peculiar equipment, and items peculiar to airdrop.

b. Provides ground transportation for unit distribution of the classes of supply for which the unit is responsible and to supplement transportation available to organic elements of the division.

c. Provides transportation for moving the division reserve supplies for which the unit is responsible.

d. Provides bath and graves registration services and clothing exchange, when augmented.

e. Provides map supply service to the division and attached units.

f. Supervises operation of unit exchanges.

g. Provides limited purchasing and contracting services.

h. Advises the units of the division on food service matters.

i. Provides salvage service for abandoned materiel and supplies of all types, except for toxic gases, ammunition, explosives, motor vehicles, aircraft, and certain signal equipment.

4. MOBILITY

Mobility of units organic to this battalion is included in appropriate component TOE extracts.

Figure 1–27—Continued

1. MISSION

To provide command, administration, and technical supervision for the supply and transport battalion.

2. ASSIGNMENT

a. Organic to supply and transport battalion, armored division, TOE 29-115H.

b. Organic to supply and transport battalion, infantry division, TOE 29-5H.

c. Organic to supply and transport battalion, infantry division (mechanized), TOE 29-65H.

3. CAPABILITIES

a. Provides the command element for the supply and transport battalion.

b. Provides messing support for the supply and transport battalion in two locations.

c. Provides the DISCOM commander and his staff advice on supply and service matters.

d. Determines requirements for; procures; and directs the receipt, temporary storage, and distribution of supplies and equipment received by the division, less classes V, VIII, and IX, communication security equipment, airdrop supplies, aircraft, automatic data processing equipment, and classified maps.

e. Exercises technical supervision over supply and service training throughout the division.

f. Plans and supervises the following service functions:

(1) Bath service and clothing exchange (when authorized).
(2) Graves registration service (when authorized).
(3) Operation of unit exchanges.
(4) Purchasing and contracting.
(5) Food service.
(6) Map supply service.
(7) Salvage service for abandoned materiel and supplies, except for toxic gases, ammunition, explosives, aircraft, and certain signal equipment.

g. Maintains, with automatic data processing support provided by the division data center, the division property book and Army equipment status reporting data.

4. MOBILITY

Sixty-percent mobile in organic vehicles.

Figure 1-27—Continued

1. MISSION

a. To support the division and attached units by providing class I, II, IV, VI, and VII supplies, except aircraft and communication security equipment.

b. To classify and dispose of unserviceable equipment, provide unclassified map supply, and operate a central issue facility.

c. To provide and maintain the division reserve of supplies for which the units is responsible.

d. To provide clothing exchange, bath, and graves registration services, when authorized augmentation.

2. ASSIGNMENT

a. Organic to supply and transport battalion, armored division, TOE 29-115H.

b. Organic to supply and transport battalion, infantry division, TOE 29-5H.

c. Organic to supply and transport battalion, infantry division (mechanized), TOE 29-65H.

3. CAPABILITIES

a. Operates the division distribution points.

b. Receives from supporting services, provides temporary storage, and issues class I, II, IV, VI, and VII supplies, except aircraft and communication security equipment. Organic battalion transportation is employed to provide unit distribution of these supplies.

c. Provides temporary storage for class III supplies and, under the direction of the division supply office, controls and supervises operation of division class III transfer and distribution points, unit distribution of class III supplies, and limited operation of mobile filling stations.

d. Provides map supply service to the division.

e. Provides salvage service for abandoned medical materiel, aircraft, communication security equipment, and materiel and supplies of all types, except for toxic agents, ammunition, and explosives.

f. Provides a central issue facility for the stockage, issue, exchange, inspection, and turn-in of organizational clothing and equipment.

g. Provides clothing exchange, bath, and graves registration services to the division, when augmented.

h. Provides organizational maintenance for organic equipment (except radios) and organic equipment of HHC, supply and transport battalion, TOE 29-6H.

4. MOBILITY

One hundred-percent mobile in organic vehicles.

Figure 1–27—Continued

TOE 55-87H TMT CO, S&T BN, ARMD DIV
TOE 55-88H TMT CO, S&T BN, INF DIV
TOE 55-84H TMT CO, S&T BN, INF DIV (MECH)

1. MISSION

a. To provide transportation for unit distribution of all classes of supply, except class V.

b. To transport the division reserve supplies for which the unit is responsible.

c. To furnish vehicles required for displacing division HQ and divisional administrative elements and to supplement means available to other elements of the division.

2. ASSIGNMENT

a. Organic to supply and transport battalion, armored division, TOE 29-115H.

b. Organic to supply and transport battalion, infantry division, TOE 29-5H.

c. Organic to supply and transport battalion, infantry division (mechanized), TOE 29-65H.

3. CAPABILITIES

a. Based on 75-percent vehicle availability, has capability to transport the following:

(1) Armored division:

	Single lift	*Shuttle*
Cargo, short tons	270	360
POL, gallons	119,550	119,550

(2) Infantry division:

	Single lift	*Shuttle*
Cargo, short tons	270	360
POL, gallons	74,250	74,250

(3) Infantry division (mechanized):

	Single lift	*Shuttle*
Cargo, short tons	270	360
POL, gallons	104,550	104,550

b. Can provide transportation for two 10-hour shifts on a 24-hour basis, when augmented.

c. Performs organizational maintenance on organic equipment.

4. MOBILITY

One hundred-percent mobile in organic vehicles and 100-percent air transportable.

Figure 1–27—Continued

Table 1-20. Summary of Equipment—Medical Battalion, Support Command, Armored, Infantry, and Infantry (Mechanized) Divisions

1	2	3	4	5	6
LIN	Nomenclature	HQ & spt co (8-36H)	3 med co (8-37H) (1)	3 med co (8-37H) (3)	Bn total (8-35H)
	CLASS 7B—GROUND SUPPORT				
1 E69242	COMP RCP PWR DRVN+AIR REC GAS DRVN 15 CFM 175 PSI.	1	0	0	1
2 E70064	COMP RCP PWR DRVN+TRK 2 WHL PNEU TIRES GAS DRVN 5 CFM 175 PSI.	1	1	3	4
3 J43918	GEN ST GAS ENG+1.5KW 60CY 1PH 2 WIRE AC 120V SHOCK	3	0	0	3
4 J44055	GEN ST GAS ENG+1.5KW DC 28V SHOCK	6	3	9	15
5 J45699	GEN ST GAS ENG+3KW 60CY 1-3PH 1-20/240V 120/208V SKID SHOCK.	1	0	0	1
	CLASS 7G—ELECTRONICS				
6 Q53001	RADIO SET AN/VRC-46	3	1	3	6
7 Q54154	RADIO SET AN/VRC-47	4	2	6	10
8 U81707	SWITCHBOARD TELEPHONE MANUAL+SE-22/PT	1	0	0	1
9 U82529	SWITCHBOARD TELEPHONE MANUAL+SE-993/GT	1	1	3	4
10 V30937	TELEPHONE SET+TA-264/PT	2	1	3	5
11 V31211	TELEPHONE SET+TA-312/PT	12	4	12	24
	CLASS 7K—TACTICAL VEHICLES				
12 W95400	TRAILER CARGO+1/4 TON 2 WHEEL W/E	13	3	9	22
13 W95537	TRAILER CARGO+3/4 TON 2 WHEEL W/E	8	2	6	14
14 W95811	TRAILER CARGO+1-1/2 TON 2 WHEEL W/E	16	6	18	34
15 W98825	TRAILER TANK+WATER 400 GALLON 1-1/2 TON 2 WHEEL W/E.	2	2	6	8
16 X38776	TRUCK AMBULANCE+3/4 TON 4×4 WE	8(4)	8	24	32(4)
17 X39735	TRUCK CARGO+3/4 TON 4×4 W/E	8	2	6	14
18 X39872	TRUCK CARGO+3/4 TON 4×4 W/WINCH W/E	1	1	3	4
19 X40009	TRUCK CARGO+2-1/2 TON 6×6 W/E	13	6	18	31
20 X40146	TRUCK CARGO+2-1/2 TON 6×6 W/WINCH W/E	5	2	6	11
21 X60833	TRUCK UTILITY+1/4 TON 4×4 W/E	13	4	12	25
	CLASS 7M—WEAPONS				
22 N96741	PISTOL CALIBER .45 AUTOMATIC+	20	7	21	41
23 R94977	RIFLE 5.56 MILLIMETER+W/E	128(15)	74(2)	222(6)	350(21)

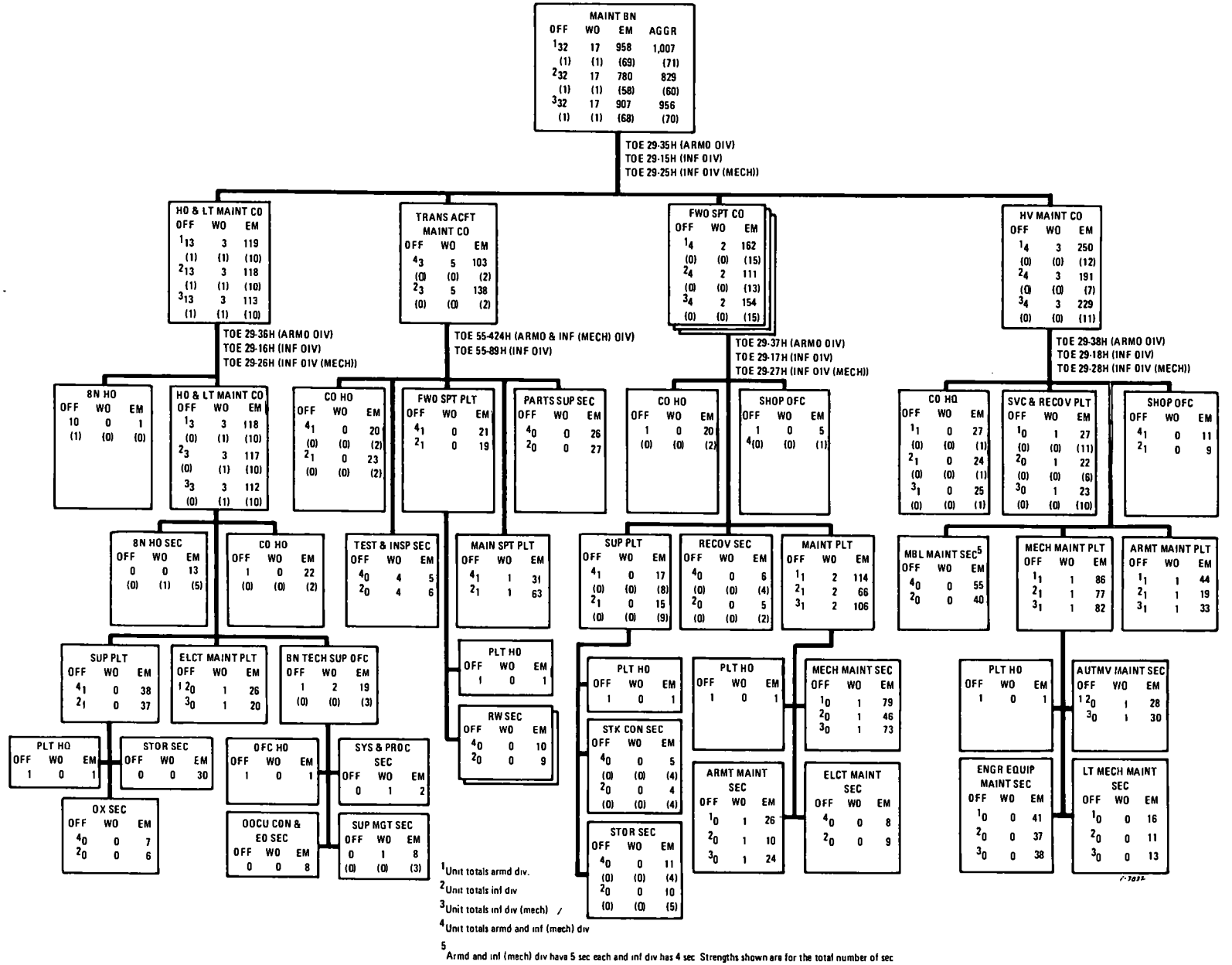

Figure 1–28. Maintenance battalion, support command, armored, infantry, and infantry (mechanized) divisions.

TOE 29-35H MAINT BN, ARMD DIV
TOE 29-15H MAINT BN, INF DIV
TOE 29-25H MAINT BN, INF DIV (MECH)

1. MISSION

To provide direct support maintenance for all divisional equipment, except for medical and cryptographic equipment and missile-peculiar items.

2. ASSIGNMENT

a. Organic to support command, armored division, TOE 29-21H.

b. Organic to support command, infantry division, TOE 29-1H.

c. Organic to support command, infantry division (mechanized), TOE 29-11H.

3. CAPABILITIES

a. Performs direct support maintenance on all authorized divisional equipment, except for medical, cryptographic, and missile-peculiar items, for a type of armored, infantry, or infantry (mechanized) division.

b. Provides technical supervision over the conduct of maintenance functions throughout the division.

c. Provides repair parts support for divisional equipment.

d. Maintains an operational readiness float of selected items.

e. Provides limited vehicular recovery assistance to supported units.

f. Can perform organizational maintenance on organic equipment.

g. Provides direct exchange service for selected items.

4. MOBILITY

One hundred-percent mobile in organic vehicles.

TOE 29-36H HQ & LT MAINT CO, MAINT BN, ARMD DIV
TOE 29-16H HQ & LT MAINT CO, MAINT BN, INF DIV
TOE 29-26H HQ & LT MAINT CO, MAINT BN, INF DIV (MECH)

1. MISSION

a. To provide command, administration, and technical supervision of the maintenance battalion.

b. To provide direct support electronic equipment maintenance and repair parts supply service to those elements of the division not located in the forward portion of the division area, a base of supply for the maintenance battalion, and supplementary support for the three forward support companies.

2. ASSIGNMENT

a. Organic to maintenance battalion, armored division, TOE 29-35H.

b. Organic to maintenance battalion, infantry division, TOE 29-15H.

c. Organic to maintenance battalion, infantry division (mechanized), TOE 29-25H.

3. CAPABILITIES

a. Maintains an operational readiness float of selected items.

b. Plans and directs all direct support maintenance for all equipment of the division, except for medical, cryptographic, and meteorological items.

c. Provides direct support electronic equipment maintenance, except for missile systems, for those elements of the division not located in the forward portion of the division area. When required, provides supplementary maintenance support to the forward support companies.

d. Receives, stores, and issues repair parts for all equipment of the division, except medical, cryptographic, missile, and aircraft avionics.

e. Provides technical supervision over the conduct of maintenance functions throughout the division.

f. Operates a direct exchange service for selected items.

g. Provides, through the technical supply office with automatic data processing equipment, centralized management for all repair parts within the division, except medical, cryptographic, and aircraft.

h. Performs organizational maintenance on organic equipment.

4. MOBILITY

One hundred-percent mobile in organic vehicles.

Figure 1–28—Continued

TOE 55-424H TRANS ACFT MAINT CO, MAINT BN, ARMD AND INF (MECH) DIV
TOE 55-89H TRANS ACFT MAINT CO, MAINT BN, INF DIV

1. MISSION

To provide direct support aircraft maintenance and aircraft-peculiar repair parts supply to using units of the division.

2. ASSIGNMENT

a. Organic to maintenance battalion, armored division, TOE 29-35H.

b. Organic to maintenance battalion, infantry division, TOE 29-15H.

c. Organic to maintenance battalion, infantry division (mechanized), TOE 29-25H.

3. CAPABILITIES

a. Provides 4,050 productive man-hours per month for direct support maintenance on Army rotary-wing aircraft organic to the armored and infantry (mechanized) divisions.

b. Provides 6,075 productive man-hours per month for direct support maintenance on Army rotary-wing aircraft organic to the infantry division, operating on a two-shift basis.

c. Provides contact teams for onsite repair of downed aircraft or preparing the downed aircraft for evacuation by medium- or heavy-lift helicopter.

d. Provides repair parts supply for divisional aircraft, avionic equipment, and aircraft armament systems.

e. Performs organizational maintenance on organic equipment.

4. MOBILITY

One hundred-percent mobile in organic vehicles.

TOE 29-37H FWD SPT CO, MAINT BN, ARMD DIV
TOE 29-17H FWD SPT CO, MAINT BN, INF DIV
TOE 29-27H FWD SPT CO, MAINT BN, INF DIV (MECH)

1. MISSION

To provide direct support maintenance and repair parts supply service for engineer, ordnance, quartermaster, and signal equipment, except photographic and cryptographic, normally in a brigade, and its attached units, of the division.

2. ASSIGNMENT

a. Organic to maintenance battalion, armored division, TOE 29-35H.

b. Organic to maintenance battalion, infantry division, TOE 29-15H.

c. Organic to maintenance battalion, infantry division (mechanized), TOE 29-25H.

3. CAPABILITIES

a. Provides direct support and technical assistance service to one brigade of the division.

b. Provides repair parts supply to satisfy the requirements of supported units.

c. Provides limited recovery and evacuation support.

d. Performs organizational maintenance on organic equipment.

4. MOBILITY

One hundred-percent mobile in organic vehicles.

Figure 1-28—Continued

TOE 29-38H HV MAINT CO, MAINT BN, ARMD DIV
TOE 29-18H HV MAINT CO, MAINT BN, INF DIV
TOE 29-28H HV MAINT CO, MAINT BN, INF DIV (MECH)

1. MISSION

a. To provide direct support maintenance for mechanical, armament, engineer, quartermaster, and power generation equipment of those elements of the division not supported by the forward support companies.

b. To provide direct support maintenance for quartermaster, chemical, and refrigeration equipment for all elements of the division.

c. To provide supplementary and backup direct support to the three forward support companies.

2. ASSIGNMENT

a. Organic to maintenance battalion, armored division, TOE 29-35H.

b. Organic to maintenance battalion, infantry division, TOE 29-15H.

c. Organic to maintenance battalion, infantry division (mechanized), TOE 29-25H.

3. CAPABILITIES

a. Provides supplementary and backup maintenance support for the forward support companies.

b. Provides limited vehicular recovery assistance to supported units, when required.

c. Performs organizational maintenance on organic equipment.

4. MOBILITY

One hundred-percent mobile in organic vehicles.

Figure 1–28—Continued

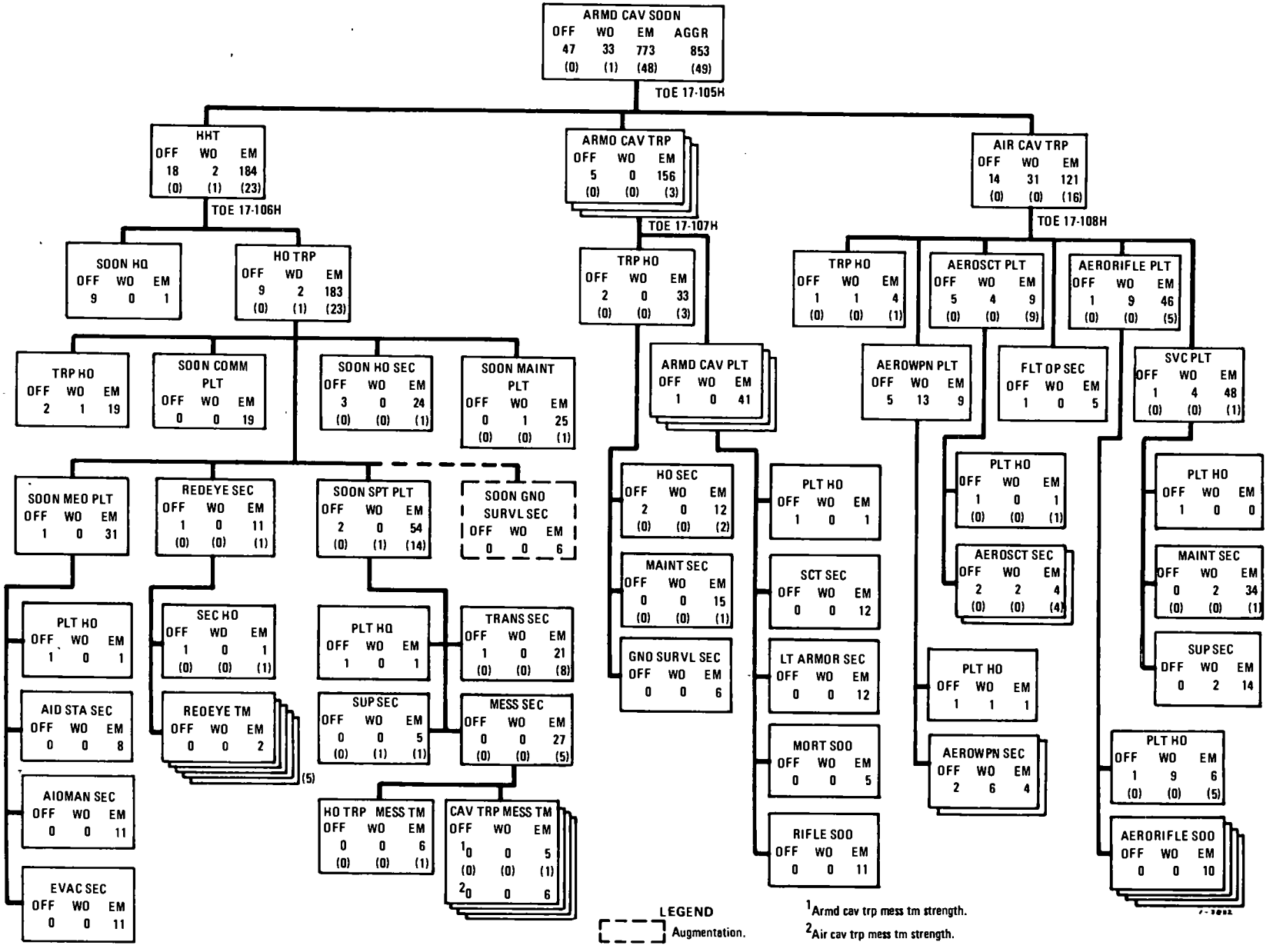

Figure 1–29. Armored cavalry squadron, armored, infantry, and infantry (mechanized) divisions.

TOE 17-105H ARMD CAV SQDN

1. MISSION

To perform reconnaissance; to provide security for the division or unit to which attached; and to engage in offensive, defensive, and delaying actions as an economy-of-force unit.

2. ASSIGNMENT

a. Organic to armored division, TOE 17H.

b. Organic to infantry division, TOE 7H.

c. Organic to infantry division (mechanized), TOE 37H.

3. CAPABILITIES

a. Conducts ground and air reconnaissance over wide fronts and to extended depths.

b. Collects and reports information of intelligence value, including information of nuclear targets and nuclear damage assessment, employing ground and air observation and electronic ground surveillance means.

c. Protects the flank or flanks of the division.

d. Provides security between divisional elements or between the division and adjacent units.

e. When reinforced, acts as a division covering force in offensive, defensive, and retrograde operations.

f. Supports squadron operations with organic nonnuclear fire.

g. Conducts radiological monitoring and survey.

h. Performs damage control operations and provides forces for rear area security.

i. Exploits the success of other units and the effects of mass destruction weapons.

j. Provides armed air escort for airmobile operations.

k. When suitably reinforced, conducts extended semi-independent operations.

l. Performs organizational maintenance on organic equipment.

4. MOBILITY

One hundred-percent mobile in organic vehicles.

TOE 17-106H HHT, ARMD CAV SQDN

I. MISSION

To furnish command, control, and supervision of the operations of the armored cavalry squadron and attached units.

2. ASSIGNMENT

Organic to armored cavalry squadron, armored, infantry, or infantry (mechanized) division, TOE 17-105H.

3. CAPABILITIES

a. Commands, controls, provides staff planning, and furnishes communications and supervision of operations.

b. Furnishes supply, transportation, organizational maintenance, and administration for organic and attached units.

c. Provides unit-level medical service to the armored cavalry squadron, to include furnishing aidmen to cavalry troops.

d. Provides centralized (squadron) or decentralized (troop) messing, as required.

e. Performs organizational maintenance on organic equipment.

4. MOBILITY

One hundred-percent mobile in organic vehicles.

Figure 1-29—Continued

TOE 17-107H ARMD CAV TRP, ARMD CAV SQDN

1. MISSION

To provide security; to perform reconnaissance for the unit to which assigned or attached; and to engage in offensive, defensive, or delaying actions as an economy-of-force unit.

2. ASSIGNMENT

Organic to armored cavalry squadron, armored, infantry, or infantry (mechanized) division, TOE 17-105H.

3. CAPABILITIES

a. Performs reconnaissance and provides security for the unit to which assigned or attached.

b. Engages in offensive, defensive, or delaying actions.

c. Conducts independent action, when properly reinforced.

d. Depends on the squadron HHT for mess facilities.

e. Performs organizational maintenance on organic equipment.

4. MOBILITY

One hundred-percent mobile in organic vehicles.

TOE 17-108H AIR CAV TRP, ARMD CAV SQDN

1. MISSION

To extend, by aerial means, the reconnaissance and security capabilities of ground units; to engage in offensive, defensive, or delaying actions within its capability; and to seize and dominate lightly defended areas or terrain features.

2. ASSIGNMENT

Organic to armored cavalry squadron, armored, infantry, or infantry (mechanized) division, TOE 17-105H.

3. CAPABILITIES

a. Performs air and ground reconnaissance and provides security for the unit to which assigned or attached.

b. Engages in offensive, defensive, or delaying actions.

c. Conducts independent action, when properly reinforced.

d. Depends on the squadron HHT for mess facilities.

e. Performs organizational maintenance on organic equipment.

4. MOBILITY

One hundred-percent mobile in organic vehicles.

Figure 1-29—Continued

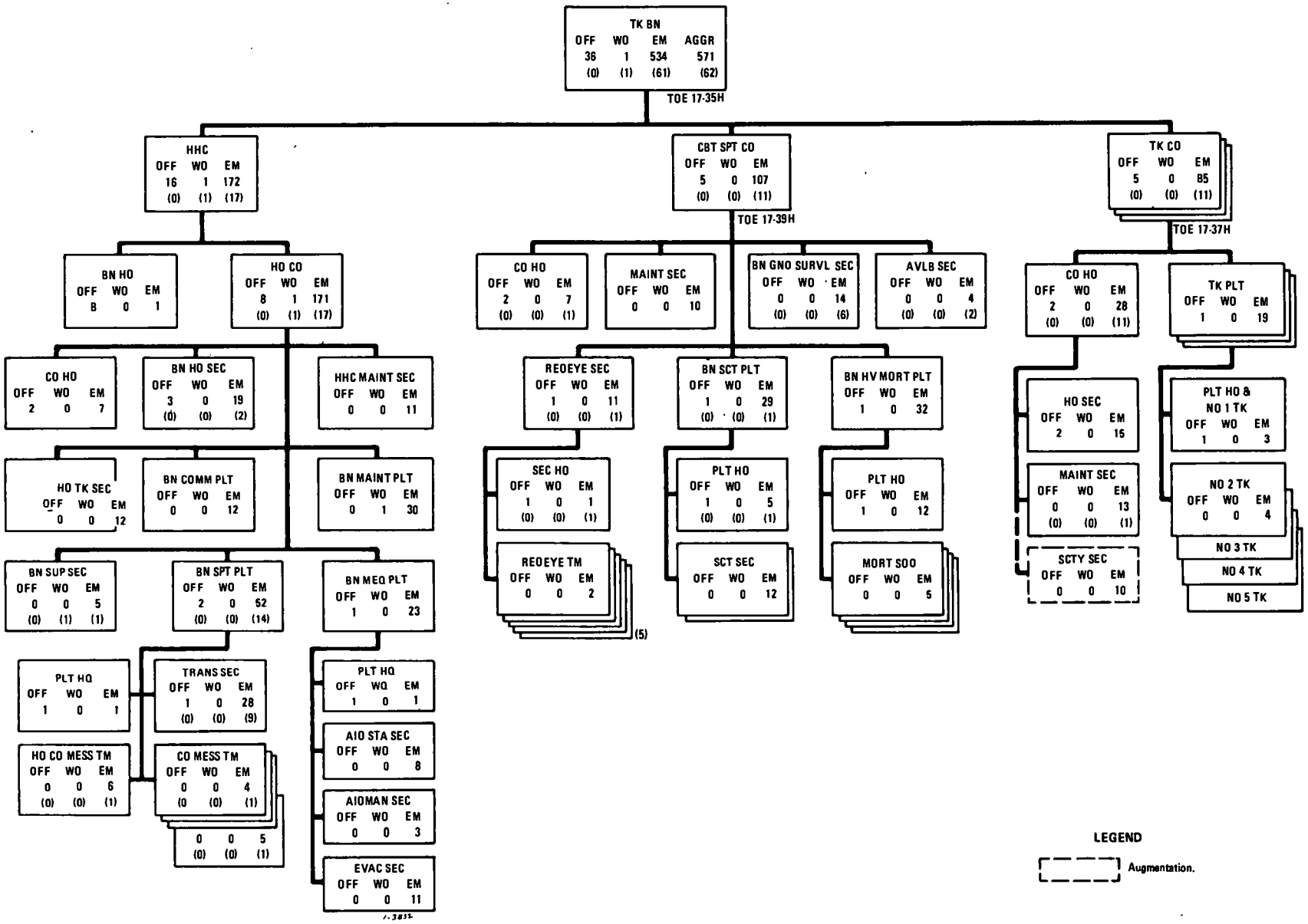

Figure 1–30. Tank battalion, armored, infantry, and infantry (mechanized) divisions.

TOE 17-35H TK BN

1. MISSION

To close with and destroy enemy forces, using fire, maneuver, and shock effect in coordination with other arms.

2. ASSIGNMENT

a. Organic to armored division, TOE 17H.

b. Organic to infantry division, TOE 7H.

c. Organic to infantry division (mechanized), TOE 37H.

3. CAPABILITIES

a. Conducts operations requiring a high degree of firepower, mobility, armor protection, and shock effect.

b. Attacks or counterattacks under hostile fire.

c. Destroys enemy armor by fire.

d. Provides the mobility, armor protection, firepower, and flexible communications to successfully exploit the effects of nuclear and nonnuclear fire support.

e. Conducts combat operations under limited visibility conditions, employing night-viewing devices and surveillance equipment.

f. Organizes, commands, and controls combined arms teams through cross-attachment with infantry or infantry (mechanized) to engage the enemy with fire, maneuver, and shock effect.

g. Performs organizational maintenance on organic equipment.

4. MOBILITY

One hundred-percent mobile in organic vehicles.

TOE 17-36H HHC, TK BN

1. MISSION

To provide command, staff, administration, communication, supply, maintenance, and medical support for the tank battalion.

2. ASSIGNMENT

Organic to tank battalion, armored, infantry, or infantry (mechanized) division, TOE 17-35H.

3. CAPABILITIES

a. Commands, controls, provides staff planning, and furnishes communications and supervision of operations.

b. Provides battalion logistic support, to include intransit storage.

c. Provides centralized (battalion) or decentralized (company) messes, as required.

d. Provides unit-level medical services, to include evacuation and establishment and operation of the battalion aid station.

e. Provides battalion-level organizational maintenance for vehicles organic to the battalion.

f. Performs organizational maintenance on organic equipment.

4. MOBILITY

One hundred-percent mobile in organic vehicles.

Figure 1–30—Continued

TOE 17-37H TK CO, TK BN

1. MISSION

To close with and destroy enemy forces, using fire, maneuver, and shock effect.

2. ASSIGNMENT

Organic to tank battalion, armored, infantry, or infantry (mechanized) division, TOE 17-35H.

3. CAPABILITIES

a. Attacks or counterattacks under hostile fire.

b. Destroys enemy armor by fire.

c. Supports infantry, infantry (mechanized), reconnaissance, or other tank units by fire, maneuver, and shock action.

d. Provides the mobility, armor protection, and firepower to successfully exploit the effects of nuclear and nonnuclear fire support.

e. Depends on the HHC for medical support, mess facilities, and transportation of a portion of its class III and V basic load.

f. Performs organizational maintenance on organic equipment.

4. MOBILITY

One hundred-percent mobile in organic vehicles.

TOE 17-39H CBT SPT CO, TK BN

1. MISSION

To provide reconnaissance, ground surveillance, indirect fire support, and limited air defense for the tank battalion.

2. ASSIGNMENT

Organic to tank battalion, armored, infantry, or infantry (mechanized) division, TOE 17-35H.

3. CAPABILITIES

a. Provides indirect fire support for the tank battalion and attached units.

b. Provides reconnaissance support for the tank battalion and attached units.

c. Performs organizational maintenance on organic equipment.

4. MOBILITY

One hundred-percent mobile in organic vehicles.

Figure 1–30—Continued

Table 1-21. Summary of Equipment—Supply and Transport Battalion, Support Command, Armored, Infantry, and Infantry (Mechanized) Divisions

1	2	3	4	5	6	7	8	9	10
LIN	Nomenclature	HHC (29-6H)	S&S co (10-7H)	Inf div (55-88H)	TMT co Inf div (mech) (55-84H)	Armd div (55-87H)	Inf div (29-5H)	Bn total Inf div (mech) (29-65H)	Armd div (29-115H)
	CLASS 2Q—GENERAL EQUIPMENT								
1 Z13157	CARD PUNCH MACHINE + ADPE	1	0	0	0	0	1	1	1
2 Z20571	DATA TRANSCEIVER CARD UNIT + ADPE	1	0	0	0	0	1	1	1
3 Z20669	DATA TRANSMISSION EQUIPMENT + ADPE	1	0	0	0	0	1	1	1
4 Z95673	VERIFIER + ADPE	1	0	0	0	0	1	1	1
	CLASS 7B—GROUND SUPPORT								
5 E69242	COMP RCP PWR DRVN + AIR REC GAS DRVN 15 CFM 175 PSI.	0	0	1	0	1	1	0	1
6 E70064	COMP RCP PWR DRVN + TRK 2 WHL PNEU TIRES GAS DRVN 5 CFM 175 PSI.	0	1	0	1	0	1	2	1
7 J35835	GEN ST DSL ENG + 15KW 60CY 3PH AC 120/208 240/416V SKID.	1	0	0	0	0	1	1	1
8 J43918	GEN ST GAS ENG + 1.5KW 60CY 1PH 2 WIRE AC 120V SHOCK.	0	7	2	2	2	9	9	9
9 J45699	GEN ST GAS ENG + 3KW 60CY 1-3PH 120/240V 120/208V SKID SHOCK.	0	1	0	0	0	1	1	1
10 J47068	GEN ST GAS ENG + 5KW 60CY 1-3PH AC 120/240 120/208V SKD-SHK MTD.	1	0	0	0	0	1	1	1
11 P96640	PUMPING ASSEMBLY FLAMMABLE LIQUID BULK TRANSFER.	0	8	0	0	0	8	8	8
12 X48914	TRUCK LIFT FORK + DSL DRVN 6000 LB CAP ROUGH TERRAIN.	0	3	0	0	0	3	3	3
	CLASS 7G—ELECTRONICS								
13 Q53001	RADIO SET AN/VRC-46	1	4	4	4	4	9	9	9
14 Q54154	RADIO SET AN/VRC-47	3	1	1	1	1	5	5	5
15 Q56783	RADIO SET AN/VRC-64	1	0	0	0	0	1	1	1
16 U81707	SWITCHBOARD TELEPHONE MANUAL + SB-22/PT	2	1	0	0	0	3	3	3
17 U82529	SWITCHBOARD TELEPHONE MANUAL + SB-993/GT	0	0	1	1	1	1	1	1
18 V31211	TELEPHONE SET + TA-312/PT	27	12 (4)	7	7	7	46 (4)	46 (4)	46 (4)
	CLASS 7K—TACTICAL VEHICLES								
19 S72024	SEMITRAILER STAKE + 12 TON 4 WHEEL W/E	0	1	20	20	20	21	21	21
20 S72983	SEMITRAILER TANK + FUEL SERVICING 5000 GALLON 12 TON 4 WHEEL W/E.	0	0	18	25	30	18	25	30
21 S74490	SEMITRAILER VAN + EXPANSIBLE 6 TON 4 WHEEL W/E.	1	0 (3)	0	0	0	1 (3)	1 (3)	1 (3)

Table 1-21. Summary of Equipment—Supply and Transport Battalion, Support Command, Armored, Infantry, and Infantry (Mechanized) Divisions—Continued

1 LIN		2 Nomenclature	3 HHC (29-6H)	4 S&S co (10-7H)	5 Inf div (55-88H)	6 TMT co Inf div (mech) (55-84H)	7 Armd div (55-87H)	8 Inf div (29-5H)	9 Bn total Inf div (mech) (29-65H)	10 Armd div (29-115H)
22	W95400	TRAILER CARGO + 1/4 TON 2 WHEEL W/E	8	3	6	6	6	17	17	17
23	W95537	TRAILER CARGO + 3/4 TON 2 WHEEL W/E	5	7 (14)	0	0	0	12 (14)	12 (14)	12 (14)
24	W95811	TRAILER CARGO + 1-1/2 TON 2 WHEEL W/E	1	8 (10)	70	69	79 (10)	78 (10)	79 (10)	78 (10)
25	W98825	TRAILER TANK + WATER 400 GALLON 1-1/2 TON 2 WHEEL W/E.	1	0	1	1	1	2	2	2
26	X39735	TRUCK CARGO + 3/4 TON 4X4 W/E	6	7 (14)	1	1	1	14 (14)	14 (14)	14 (14)
27	X40039	TRUCK CARGO + 2-1/2 TON 6X6 W/E	1	7 (9)	65	65	65	73 (9)	73 (9)	73 (9)
28	X40146	TRUCK CARGO + 2-1/2 TON 6X6 W/WINCH W/E	1	3 (1)	6	6	6	10 (1)	10 (1)	10 (1)
29	X59326	TRUCK TRACTOR + 5 TON 6X6 W/E	1	1	28	35	40	30	37	42
30	X60833	TRUCK UTILITY + 1/4 TON 4X4 W/E	8	3	6	6	6	17	17	17
31	X63299	TRUCK WRECKER + 5 TON 6X6 W/WINCH W/E	0	1	2	2	2	3	3	3
		CLASS 7M—WEAPONS								
32	L92386	MACHINE GUN 7.62 MILLIMETER + LIGHT FLEXIBLE	2	7 (1)	21	22	24	30 (1)	31 (1)	33 (1)
33	M75714	MOUNT TRIPOD MACHINE GUN + 7.62 MILLIMETER	2	7 (1)	21	22	24	30 (1)	31 (1)	33 (1)
34	N96741	PISTOL CALIBER .45 AUTOMATIC +	6	1	1	1	1	8	8	8
35	R94977	RIFLE 5.56 MILLIMETER + W/E	100	130 (94)	174 (80)	195 (79)	204 (63)	404 (174)	425 (173)	434 (157
		CLASS 7Q—GENERAL EQUIPMENT								
36	J04716	FUEL SYSTEM SUPPLY POINT + PORTABLE 6000 GAL CAP.	0	1	0	0	0	1	1	1
37	V12141	TANK AND PUMP UNIT LIQUID DISPENSING TRUCK-MOUNTING.	0	0	8	8	8	8	8	8
38	V19950	TANK UNIT LIQUID DISPENSING TRAILER MOUNTING +.	0	0	8	8	8	8	8	8

Table 1–22. Summary of Equipment—Maintenance Battalion, Support Command, Armored, Infantry, and Infantry (Mechanized) Divisions

1	2	3	4	5	6	7	8	9	10	11	12	13	14	15	16
		HQ & lt maint co			Trans acft maint co		3 fwd spt co			Hv maint co				Bn total	
LIN	Nomenclature	Inf div (29–16H)	Inf div (mech) (29–26H)	Armd div (29–36H)	Armd and inf (mech) div (55–424H)	Inf div (55–89H)	Inf div (29–17H) (ea)	Inf div (mech) (29–27H) (ea)	Armd div (29–37H) (ea)	Inf div (29–18H)	Inf div (mech) (29–28H)	Armd div (29–38H)	Inf div (29–15H)	Inf div (mech) (29–25H)	Armd div (29–35H)
	CLASS 2Q— GENERAL EQUIPMENT														
1 Z20571	DATA TRANSCEIVER	1	1	1	0	0	0	0	0	0	0	0	1	1	1
	CLASS 7A—AIR														
2 K31795	HELICOPTER UTILITY, UH-1H.	0	0	0	2	2	0	0	0	0	0	0	2	2	2
	CLASS 7B— GROUND SUPPORT														
3 E67735	COMP RCP PWR DRVN+ BASE AC 115V 60CY 1PH 2.7 CFM 80 PSI.	1	1	1	0	0	0	0	0	0	0	0	1	1	1
4 E69242	COMP RCP PWR DRVN+ AIR REC GAS DRVN 15 CFM 175 PSI.	0	0	0	0	0	0	0	0	2	3	3	2	3	3
5 E70064	COMP RCP PWR DRVN+ TRK 2 WHL PNEU TIRES GAS DRVN 5 CFM 175 PSI.	1	1	1	1	1	1	1	1	1	1	1	6	6	6
6 E73626	COMP RTY PWR DRVN+ AIR WHBRW FR 2 PNU TIRE GAS DRV 60 CFM 6.5 PSI.	1	0	0	0	0	2	2	2	0	0	0	6	6	6
7 F39241	CRANE WHEEL MTD+ 5 TON 3/8 CU YD DSL 4×4 ROUGH TERRN AIR TRNSPT.	0	0	0	0	0	1	1	1	1	1	1	4	4	4
8 J36109	GEN ST DSL ENG+ 30KW 60CY 3PH AC 120/208 240/416V 50CY SKID.	0	0	0	2	3	0	0	0	0	0	0	3	2	2
9 J43918	GEN ST GAS ENG+ 1.5KW 60CY 1PH 2 WIRE AC 120V SHOCK.	5	5	5	2	2	7	7	7	8	7	7	36	35	35
10 J44055	GEN ST GAS ENG+ 1.5KW DC 28V SHOCK.	1	1	1	0	0	3	3	3	2	2	2	12	12	12

Table 1-22. Summary of Equipment—Maintenance Battalion, Support Command, Armored, Infantry, and Infantry (Mechanized) Divisions—Continued

1	2	3	4	5	6	7	8	9	10	11	12	13	14	15	16
		HQ & lt maint co			Trans acft maint co		3 fwd apt co			Hv maint co				Bn total	
LIN	Nomenclature	Inf div (29-16H)	Inf div (mech) (29-26H)	Armd div (29-36H)	Armd and inf (mech) div (55-424H)	Inf div (55-89H)	Inf div (29-17H) (ea)	Inf div (mech) (29-27H) (ea)	Armd div (29-37H) (ea)	Inf div (29-18H)	Inf div (mech) (29-28H)	Armd div (29-38H)	Inf div (29-15H)	Inf div (mech) (29-25H)	Armd div (29-35H)
11 J45699	GEN ST GAS ENG+ 3KW 60CY 1-3PH 120/240V 120/208V SKID SHOCK.	0	0	0	1	1	0	0	0	0	0	0	1	1	1
12 J47068	GEN ST GAS ENG+ 5KW 60CY 1-3PH AC 120 240 120/208V SKD-SHK MTD.	1	1	1	0	0	1	1	1	2	2	2	6	6	6
13 J49055	GEN ST GAS ENG+ 7.5KW DC 28.5V WHL MTD.	0	0	0	1	1	0	0	0	0	0	0	1	1	1
14 X48914	TRUCK LIFT FORK+ DSL DRVN 6000 LB CAP ROUGH TERRAIN.	1	1	1	1	1	0	0	0	0	0	0	2	2	2
	CLASS 7G—ELECTRONICS														
15 Q32756	RADIO SET+ AN/GRC-106.	0	0	0	0	0	0	0	0	0	0	0(3)	0	0	0(3)
16 Q42092	RADIO SET+ AN/URC-10.	0	0	0	2	2	0	0	0	0	0	0	2	2	2
17 Q53001	RADIO SET AN/VRC-46.	1	1	1	0	0	1	1	1	2	2	2(3)	6	6	6(3)
18 Q54154	RADIO SET AN/VRC-47.	2	2	2	1	1	1	1	1	1	1	1	7	7	7
19 U81707	SWITCHBOARD TELEPHONE MANUAL+ SB-22/PT.	1	1	1	0	0	0	0	0	1	1	1	2	2	2
20 U82529	SWITCHBOARD TELEPHONE MANUAL+ SB-993/GT.	0	0	0	1	1	1	1	1	0	0	0	4	4	4
21 V31211	TELEPHONE SET+ TA-312/PT	9	9	9	6	6	8	8	7	5	5	5	44	44	41
	CLASS 7K—TACTICAL VEHICLES														
22 E02670	CHASSIS TRAILER+ GENERAL PURPOSE 3-1/2 TON 2 WHEEL W/E.	1	1	1	0	0	0	0	0	0	0	0	1	1	1
23 E02807	CHASSIS TRAILER+	0	0	0	2	3	0	0	0	0	0	0	3	2	2

		GENERATOR 2-1/2 TON 2 WHEEL W/E.														
24	K90188	INSTRUMENT REPAIR SHOP TRUCK MOUNTED+ 2-1/2 TON 6×6 W/E.	6	6	6	0	0	2	2	2	0	0	0	12	12	12
25	S70243	SEMITRAILER LOW BED+ WRECKER 12 TON 4 WHEEL 40 FT W/E.	0	0	0	1	1	0	0	0	0	0	0	1	1	1
26	S72024	SEMITRAILER STAKE+ 12 TON 4 WHEEL W/E.	9	9	9	1	2	2	2	2	0	0	0	17	16	16
27	S73394	SEMITRAILER TANK TRANSPORTER+ 50 TON 8 WHEEL W/E.	0	0	0	0	0	0	0	0	2	6	6	2	6	6
28	S74079	SEMITRAILER VAN+ CARGO 12 TON 4 WHEEL W/E.	0	0	0	9	9	0	0	0	0	0	0	9	9	9
29	S74490	SEMITRAILER VAN+ EXPANSIBLE 6 TON 4 WHEEL W/E.	0	0	0	1	1	0	0	0	0	0	0	1	1	1
30	W95400	TRAILER CARGO+ 1/4 TON 2 WHEEL W/E.	6	6	6	3	4	4	4	4	2	5	5	24	26	26
31	W95537	TRAILER CARGO+ 3/4 TON 2 WHEEL W/E.	5	6	5	2	2	3	3	3	3	4	4	19	21	20
32	W95811	TRAILER CARGO+ 1-1/2 TON 2 WHEEL W/E.	5	6	7	6	8	17	17	17	15	15	18	79	78	82
33	W98825	TRAILER TANK+ WATER 400 GALLON 1-1/2 TON 2 WHEEL W/E.	1	1	1	1	1	1	1	1	1	1	1	6	6	6
34	X39735	TRUCK CARGO+ 3/4 TON 4×4 W/E.	6	6	6	2	2	3	3	3	4	4	4	21	21	21
35	X40009	TRUCK CARGO+ 2-1/2 TON 6×6 W/E.	6	6	7	9	10	10	10	11	15	15	17	61	60	66
36	X40146	TRUCK CARGO+ 2-1/2 TON 6×6 W/WINCH W/E.	0	0	0	1	1	4	4	2	0	0	0	13	13	7
37	X57271	TRUCK TANK+ FUEL SERVICING 2-1/2 TON 6×6 W/E.	1	1	1	0	0	0	0	0	1	1	1	2	2	2
38	X59052	TRUCK TRACTOR+ 2-1/2 TON 6×6 W/E.	2	2	2	0	0	0	0	0	0	0	0	2	2	2
39	X59189	TRUCK TRACTOR+ 2-1/2 TON 6×6 W/WINCH W/E.	0	0	0	0	0	0	0	0	1	1	1	1	1	1
40	X59326	TRUCK TRACTOR+ 5 TON 6×6 W/E.	14	14	14	17	19	4	4	4	0	0	0	45	43	43

Table 1-22. Summary of Equipment—Maintenance Battalion, Support Command, Armored, Infantry, and Infantry (Mechanized) Divisions—Continued

1	2	8	4	5	6	7	8	9	10	11	12	13	14	15	16
		HQ & lt maint co			Trans acft maint co		3 fwd spt co			Hv maint co				Bn total	
LIN	Nomenclature	Inf div (29-16H)	Inf div (mech) (29-26H)	Armd div (29-36H)	Armd and inf (mech) div (55-424H)	Inf div (55-89H)	Inf div (29-17H) (ea)	Inf div (mech) (29-27H) (ea)	Armd div (29-37H) (ea)	Inf div (29-18H)	Inf div (mech) (29-28H)	Armd div (29-38H)	Inf div (29-15H)	Inf div (mech) (29-25H)	Armd div (29-35H)
41 X59463	TRUCK TRACTOR+ 5 TON 6×6 W/WINCH W/E.	1	1	1	0	0	0	0	0	0	0	0	1	1	1
42 X59600	TRUCK TRACTOR+ 10 TON 6×6 W/DUAL MIDSHIP WN W/HI MTD 5TH WHL W/E.	0	0	0	0	0	0	0	0	2	6	6	2	6	6
43 X60696	TRUCK TRACTOR WRECKER+ 5 TON 6×6 W/WINCH W/E.	0	0	0	1	1	0	0	0	0	0	0	1	1	1
44 X60833	TRUCK UTILITY+ 1/4 TON 4×4 W/E.	7	7	7	4	5	5	5	5	3	6	6	30	32	32
45 X62340	TRUCK VAN+ SHOP 2-1/2 TON 6×6 W/E.	6	6	6	3	4	6	6	6	5	7	7	33	34	34
46 X62477	TRUCK VAN+ SHOP 2-1/2 TON 6×6 W/ WINCH W/E.	0	0	0	1	1	0	0	0	0	0	0	1	1	1
47 X63299	TRUCK WRECKER+ 5 TON 6×6 W/WINCH W/E.	0	0	0	0	0	2	2	2	2	2	2	8	8	8
	CLASS 7M—WEAPONS														
48 G02204	DETECTING SET MINE+ PTBL METALLIC AND NONMETALLIC.	1	1	1	0	0	0	0	0	1	1	1	2	2	2
49 G02341	DETECTING SET MINE+ PTBL METALLIC.	1	1	1	0	0	0	0	0	1	1	1	2	2	2
50 L92386	MACHINE GUN 7.62 MILLIMETER+ LIGHT FLEXIBLE.	3	3	3	2	2	3	3	3	4	4	4	18	18	18
51 M75714	MOUNT TRIPOD MACHINE GUN+ 7.62 MILLIMETER.	3	3	3	2	2	3	3	3	4	4	4	18	18	18
52 N96741	PISTOL CALIBER .45 AUTOMATIC+	3	3	3	0	0	2	2	2	2	2	2	11	11	11
53 R50680	RECOVERY VEHICLE FULL TRACKED+ MEDIUM.	0	0	0	0	0	1	1	1	1	1	1	4	4	4
54 R91244	REVOLVER CALIBER .38+ 4 INCH BARREL.	2	2	2	12	13	0	0	0	0	0	0	15	14	14

55	R94977	RIFLE 5.56 MILLIMETER+ W/E.	128 (12)	126 (8)	129 (12)	98 (2)	127	153	153 (15)	161 (15)	190	219 (2)	228 (12)	904 (12)	902 (57)	938 (71)
		CLASS 7Q— GENERAL EQUIPMENT														
56	T10138	SHOP EQUIP CONTACT MAINT TRK MTD+.	0	0	0	0	0	0	0	0	1	1	1	1	1	1
57	T10275	SHOP EQUIP ELEC REP SEMITRLR MTD+ ARMY.	0	0	0	0	0	0	0	0	1	1	1	1	1	1
58	V12141	TANK AND PUMP UNIT LIQUID DISPENSING TRUCKMOUNTING+.	0	0	0	2	2	0	0	0	0	0	0	2	2	2

Table 1-23. Summary of Equipment—
Armored Cavalry Squadron, Armored, Infantry, and Infantry (Mechanized) Divisions

1	2	3	4	5	6	7
LIN	Nomenclature	HHT (17-106H)	3 armd cav trp (17-107H)		Air cav trp (17-108H)	Sqdn total (17-105H)
			(1)	(3)		
	CLASS 7A—AIR					
1 K29660	HELICOPTER ATTACK+ AH-1G	0	0	0	9	9
2 K30645	HELICOPTER OBSERVATION+ OH-6A	0	0	0	9	9
3 K31795	HELICOPTER UTILITY, UH-1H	0	0	0	8	8
	CLASS 7B—GROUND SUPPORT					
4 E69242	COMP RCP PWR DRVN+ AIR REC GAS DRVN 15 CFM 175 PSI.	1	0	0	0	1
5 E70064	COMP RCP PWR DRVN+ TRK 2 WHL PNEU TIRES GAS DRVN 5 CFM 175 PSI.	1	1	3	1	5
6 J42685	GEN ST GAS ENG+ 0.3KW AC 115V 1PH 400CY DC 24 TO 35V.	0(2)	2	6	0	6(2)
7 J43918	GEN ST GAS ENG+ 1.5KW 60CY 1PH 2 WIRE AC 120V SHOCK.	4	0	0	4	8
8 J44055	GEN ST GAS ENG+ 1.5KW DC 28V SHOCK	5	0	0	1	6
9 J45699	GEN ST GAS ENG+ 3KW 60CY 1-3PH 120/240V 120/208V SKID SHOCK.	1	0	0	0	1
10 P96640	PUMPING ASSEMBLY FLAMMABLE LIQUID BULK TRANSFER+.	0	0	0	2	2
	CLASS 7G—ELECTRONICS					
11 Q16109	RADAR SET+ AN/PPS-5 LESS POWER	0(2)	2	6	0	6(2)
12 Q32756	RADIO SET AN/GRC-106	2	1	3	1	6
13 Q34308	RADIO SET AN/GRC-160	5	8	24	0	29
14 Q38299	RADIO SET+ AN/PRC-77	0	3	9	9	18
15 Q42092	RADIO SET+ AN/URC-10	0	0	0	26	26
16 Q45779	RADIO SET AN/VRC-12	2	7	21	0	23
17 Q53001	RADIO SET AN/VRC-46	12(2)	7(1)	21(3)	0	33(5)
18 Q54154	RADIO SET AN/VRC-47	6	3	9	4	19
19 Q55114	RADIO SET AN/VRC-49	1	0	0	0	1
20 Q56783	RADIO SET AN/VRC-64	6	13	39	0	45
21 U81707	SWITCHBOARD TELEPHONE MANUAL+ SB-22/PT.	1	1	3	1	5
22 V30252	TELEPHONE SET+ TA-1/PT	5	6	18	5	28
23 V30937	TELEPHONE SET+ TA-264/PT	2	0	0	0	2
24 V31211	TELEPHONE SET+ TA-312/PT	7(2)	7	21	8	36(2)
	CLASS 7K—TACTICAL VEHICLES					
25 D11401	CARRIER COMMAND AND RECONNAISSANCE+ ARMORED.	2	16	48	0	50
26 D11538	CARRIER COMMAND POST+ LIGHT TRACKED.	6	0	0	0	6
27 D12086	CARRIER PERSONNEL FULL TRACKED+ ARMORED.	3(2)	7	21	0	24(2)
28 W94030	TRAILER AMMUNITION+ 1-1/2 TON 2 WHEEL W/E.	0	0	0	2	2
29 W95400	TRAILER CARGO+ 1/4 TON 2 WHEEL W/E	5	1	3	3	11
30 W95537	TRAILER CARGO+ 3/4 TON 2 WHEEL W/E	3	0	0	3	6
31 W95811	TRAILER CARGO+ 1-1/2 TON 2 WHEEL W/E	10	2	6	6	22
32 W98825	TRAILER TANK+ WATER 400 GALLON 1-1/2 TON 2 WHEEL W/E.	5	0	0	0	5
33 X38639	TRUCK AMBULANCE+ 1/4 TON 4×4 W/E	3	0	0	0	3
34 X39735	TRUCK CARGO+ 3/4 TON 4×4 W/E	6	0	0	3	9
35 X40009	TRUCK CARGO+ 2-1/2 TON 6×6 W/E	9	1	3	0	12

Table 1-23. Summary of Equipment—
Armored Cavalry Squadron, Armored, Infantry, and Infantry (Mechanized) Divisions—Continued

1	2	3	4	5	6	7
LIN	Nomenclature	HHT (17-106H)	3 armd cav trp (17-107H)		Air cav trp (17-108H)	Sqdn total (17-105H)
			(1)	(3)		
36 X40146	TRUCK CARGO+ 2-1/2 TON 6×6 W/WINCH W/E.	6	1	3	5	14
37 X40831	TRUCK CARGO+ 5 TON 6×6 LWB W/E	11	0	0	0	11
38 X40968	TRUCK CARGO+ 5 TON 6×6 LWB W/WINCH W/E.	7	0	0	2	9
39 X57271	TRUCK TANK+ FUEL SERVICING 2-1/2 TON 6×6 W/E.	0	0	0	4	4
40 X60833	TRUCK UTILITY+ 1/4 TON 4×4 W/E	16	3	9	3	28
41 X62340	TRUCK VAN+ SHOP 2-1/2 TON 6×6 W/E	0	0	0	1	1
42 X63299	TRUCK WRECKER+ 5 TON 6×6 W/WINCH W/E.	3	0	0	0	3
	CLASS 7M—WEAPONS					
43 A89819	ARMAMENT POD AIRCRAFT 7.62 MILLIMETER MACHINE GUN+ W/E.	0	0	0	10	10
44 A90117	ARMAMENT SUBSYSTEM HELICOPTER 7.62 MILLIMETER MACHINE GUN+ LIGHT.	0	0	0	6	6
45 A90122	ARMAMENT SUBSYSTEM HELICOPTER 7.62MM MACHINE GUN+ DOOR MTD L W.	0	0	0	2	2
46 A90154	ARMAMENT SUBSYSTEM HELICOPTER 7.62MM MACHINE GUN+ HIGH RATE.	0	0	0	9	9
47 A90436	ARMAMENT SUBSYS HEL 7.62MM MG 40MM GRENADE LNCHR+ HIGH RATE.	0	0	0	9	9
48 A93124	ARMORED RECONNAISSANCE AIRBORNE ASSAULT VEHICLE+.	0	9	27	0	27
49 G02204	DETECTING SET MINE+ PTBL METALLIC AND NONMETALLIC.	1	3	9	0	10
50 G02341	DETECTING SET MINE+ PTBL METALLIC	1	3	9	0	10
51 L91975	MACHINE GUN CALIBER .50+ HB FLEXIBLE FOR GROUND USE.	22	1	3	7	32
52 L92386	MACHINE GUN 7.62 MILLIMETER+ LIGHT FLEXIBLE.	0	3	9	4	13
53 M68282	MORTAR 4.2 INCH+ ON MOUNT	0	3	9	0	9
54 M75577	MOUNT TRIPOD MACHINE GUN+ HEAVY-CALIBER 50.	22	1	3	7	32
55 M75714	MOUNT TRIPOD MACHINE GUN+ 7.62 MILLIMETER.	0	3	9	4	13
56 N96741	PISTOL CALIBER .45 AUTOMATIC+	35(2)	45	135	0	170(2)
57 R50543	RECOVERY VEHICLE FULL TRACKED+ LIGHT ARMORED.	2	1	3	0	5
58 R91244	REVOLVER CALIBER .38+ 4 INCH BARREL	0	0	0	62(15)	62(15)
59 R94977	RIFLE 5.56 MILLIMETER+ W/E	169(22)	125(3)	372(9)	194(1)	648(32)
60 U56346	SUBMACHINE GUN CALIBER .45+	4	12	36	0	40
	CLASS 7Q—GENERAL EQUIPMENT					
61 V12141	TANK AND PUMP UNIT LIQUID DISPENSING TRUCKMOUNTING+.	5	0	0	0	5

Table 1-24. Summary of Equipment—
Tank Battalion, Armored, Infantry, and Infantry (Mechanized) Divisions

1	2	3	4	5	6	7
LIN	Nomenclature	HHC (17-36H)	3 tk co (17-37H) (1)	(3)	Cpt spt co (17-39H)	Bn total (17-35H)
	CLASS 7B—GROUND SUPPORT					
1 C20414	BRIDGE ARMOR VEH LAUNCH SCISSOR TY+ CL 60 ALUM 60 FT LG CF SPAN.	0	0	0	2	2
2 E69242	COMP RCP PWR DRVN+ AIR REC GAS DRVN 15 CFM 175 PSI.	1	0	0	0	1
3 E70064	COMP RCP PWR DRVN+ TRK 2 WHL PNEU TIRES GAS DRVN 5 CFM 175 PSI.	1	1	3	1	5
4 J42685	GEN ST GAS ENG+ 0.3KW AC 115V 1PH 400CY DC 24 TO 35V.	0(3)	0	0	4	4(3)
5 J43918	GEN ST GAS ENG+ 1.5KW 60CY 1PH 2 WIRE AC 120V SHOCK.	5	1	3	4	8
6 J44055	GEN ST GAS ENG+ 1.5KW DC 24V SHOCK	1	0	0	1	9
7 J45699	GEN ST GAS ENG+ 3KW 60CY 1-3PH 120/240V 120/208V SKID SHOCK.	0	0	0	0	0
8 L43664	LAUNCH M60 SERIES TANK CHASS TRNSPTG+ 40 AND 60 FT BRIDGE TY CL60.	0	0	0	2	2
	CLASS 7G—ELECTRONICS					
9 Q16109	RADAR SET+ AN/PPS-5 LESS POWER	0(3)	0	0	4	4(3)
10 Q34308	RADIO SET AN/GRC-160	0(3)	0	0	17	17(3)
11 Q38299	RADIO SET+ AN/PRC-77	0	0	0	3	3
12 Q45779	RADIO SET AN/VRC-12	3	2	6	1	10
13 Q53001	RADIO SET AN/VRC-46	17(1)	1	3	9	25(1)
14 Q54154	RADIO SET AN/VRC-47	4	2	6	6	15
15 Q55114	RADIO SET AN/VRC-49	1	0	0	0	1
16 Q56783	RADIO SET AN/VRC-64	5	22	66	4	75
17 U81707	SWITCHBOARD TELEPHONE MANUAL+ SB-22/PT.	2	0	0	2	4
18 U82529	SWITCHBOARD TELEPHONE MANUAL+ SB-993/GT.	0	1	3	1	4
19 V30252	TELEPHONE SET+ TA-1/PT	0	4	12	10	22
20 V31211	TELEPHONE SET+ TA-312/PT	10(3)	3	9	18	37(3)
	CLASS 7K—TACTICAL VEHICLES					
21 D11401	CARRIER COMMAND AND RECONNAISSANCE+ ARMORED.	0	0	0	9	9
22 D11538	CARRIER COMMAND POST+ LIGHT TRACKED.	6	0	0	1	7
23 D12086	CARRIER PERSONNEL FULL TRACKED+ ARMORED.	3	1	3	2	8
24 W95400	TRAILER CARGO+ 1/4 TON 2 WHEEL W/E	5	1(1)	3(3)	11	19(3)
25 W95537	TRAILER CARGO+ 3/4 TON 2 WHEEL W/E	1	1	3	2	4
26 W95811	TRAILER CARGO+ 1-1/2 TON 2 WHEEL W/E	15	2	6	1	23
27 W98825	TRAILER TANK+ WATER 400 GALLON 1-1/2 TON 2 WHEEL W/E.	5	0	0	0	5
28 X38639	TRUCK AMBULANCE+ 1/4 TON 4×4 W/E	3	0	0	0	3
29 X39735	TRUCK CARGO+ 3/4 TON 4×4 W/E	3	0	0	1	4
30 X39872	TRUCK CARGO+ 3/4 TON 4×4 W/WINCH W/E	3	1	3	5	6
31 X40009	TRUCK CARGO+ 2-1/2 TON 6×6 W/E	6	0	0	1	7
32 X40146	TRUCK CARGO+ 2-1/2 TON 6×6 W/WINCH W/E.	7	2	6	1	14
33 X40831	TRUCK CARGO+ 5 TON 6×6 LWB W/E	13	0	0	0	13
34 X40968	TRUCK CARGO+ 5 TON 6×6 LWB W/WINCH W/E.	7	0	0	0	7
35 X57271	TRUCK TANK+ FUEL SERVICING 2-1/2 TON 6×6 W/E.	1	0	0	0	1

Table 1-24. Summary of Equipment—
Tank Battalion, Armored, Infantry, and Infantry (Mechanized) Divisions—Continued

1	2		3	4	5	6	7
	LIN	Nomenclature	HHC (17-86H)	8 tk co (17-87H) (1)	8 tk co (17-87H) (8)	Cpt spt co (17-89H)	Bn total (17-85H)
36	X60833	TRUCK UTILITY+ 1/4 TON 4×4 W/E	15	3(1)	9(3)	11	35(3)
37	X63299	TRUCK WRECKER+ 5 TON 6×6 W/WINCH W/E	1	0	0	0	1
		CLASS 7M—WEAPONS					
38	G02204	DETECTING SET MINE+ PTBL METALLIC AND NONMETALLIC.	1	1	3	1	5
39	G02341	DETECTING SET MINE+ PTBL METALLIC	1	1	3	1	5
40	L91975	MACHINE GUN CALIBER .50+ HB FLEXIBLE FOR GROUND USE.	19	1	3	2	24
41	L92386	MACHINE GUN 7.62 MILLIMETER+ LIGHT FLEXIBLE.	0	0	0	0	0
42	M68282	MORTAR 4.2 INCH+ ON MOUNT	0	0	0	4	4
43	M75577	MOUNT TRIPOD MACHINE GUN+ HEAVY CALIBER 50.	19	1	3	2	24
44	M75714	MOUNT TRIPOD MACHINE GUN+ 7.62 MILLIMETER.	0	0	0	0	0
45	N96741	PISTOL CALIBER .45 AUTOMATIC+	34	71	213	27	280
46	R50543	RECOVERY VEHICLE FULL TRACKED+ LIGHT ARMORED.	1	0	0	1	2
47	R50680	RECOVERY VEHICLE FULL TRACKED+ MEDIUM.	2	1	3	0	5
48	R94977	RIFLE 5.56 MILLIMETER+ W/E	155(15)	19(2)	57(6)	85(17)	297(38)
49	U56346	SUBMACHINE GUN CALIBER .45+	12	36	108	2	122
50	V13100	TANK COMBAT FULL TRACKED+ 105MM GUN.	3	17	51	0	54
		CLASS 7Q—GENERAL EQUIPMENT					
51	V12141	TANK AND PUMP UNIT LIQUID DISPENSING TRUCKMOUNTING+.	5	0	0	0	5
52	V19950	TANK UNIT LIQUID DISPENSING TRAILER MOUNTING+.	5	0	0	0	5

1-10. A Type of Airborne Division

Figure 1-33 shows the organizational structure and personnel strengths for a type of airborne division found in a theater of operations. This type of division has a division base and nine maneuver battalions. Table 1-27 provides a summary of the division's weapons and missiles, aircraft, electronics, ground support materiel, vehicles, and general equipment by class of supply. Figures 1-34 through 1-52 provide the organizational structures and personnel strengths for subordinate elements of a type of airborne division. Tables 1-28 through 1-38 provide summaries of selected items of equipment for these subordinate elements.

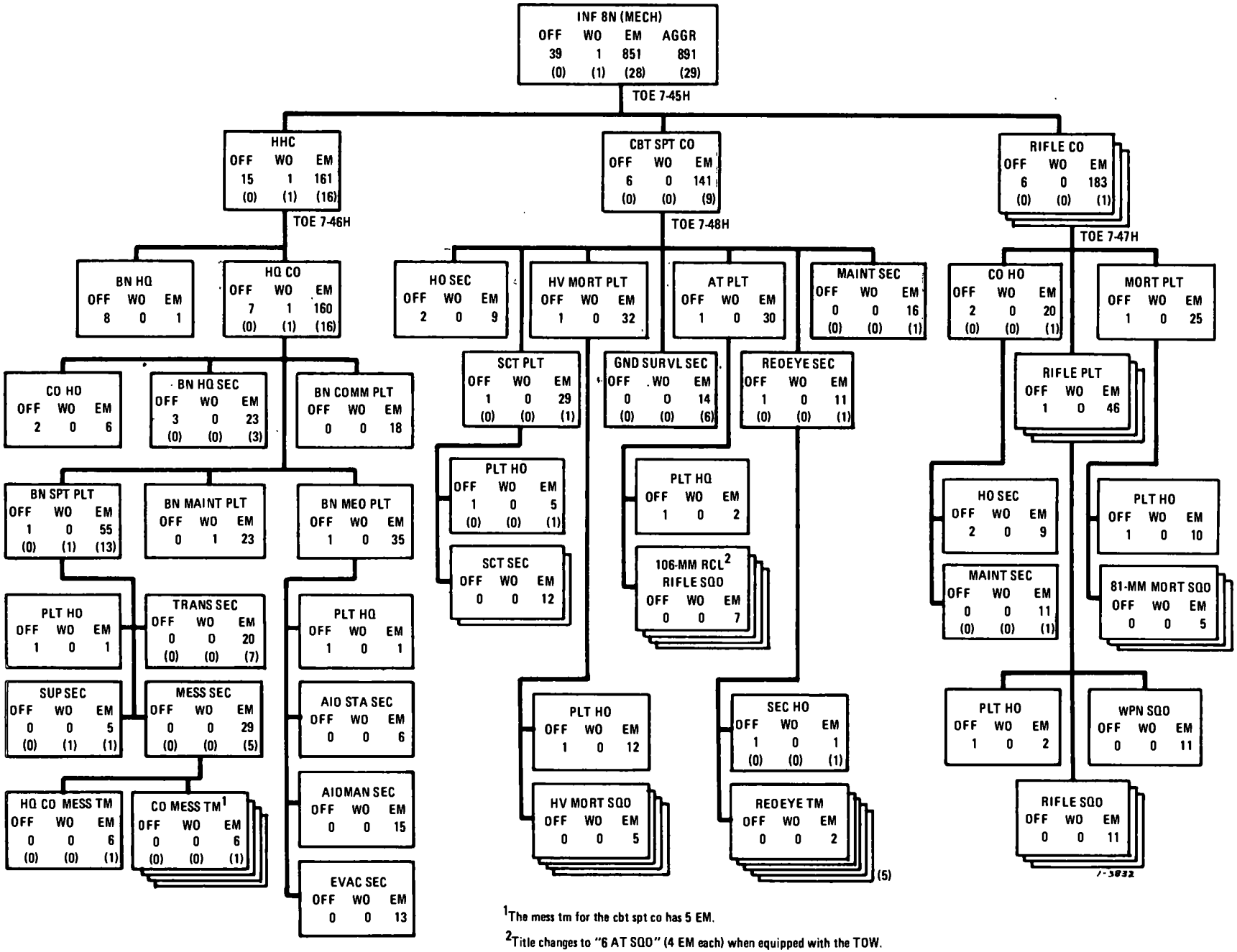

[1]The mess tm for the cbt spt co has 5 EM.

[2]Title changes to "6 AT SQD" (4 EM each) when equipped with the TOW.

Figure 1-31. Infantry battalion (mechanized), armored, infantry, and infantry (mechanized) divisions.

TOE 7-45H INF BN (MECH)

1. MISSION

To close with the enemy by means of fire and maneuver to destroy or capture him or to repel his assault by fire, close combat, and counterattack.

2. ASSIGNMENT

a. Organic to armored division, TOE 17H.
b. Organic to infantry division, TOE 7H.
c. Organic to infantry division (mechanized), TOE 37H.

3. CAPABILITIES

a. Provides a base of fire and maneuver elements.
b. Seizes and holds terrain.
c. Conducts independent operations on a limited scale.
d. Furnishes limited antitank protection.
e. Provides indirect fire support for organic and attached units.
f. Conducts long-range patrolling, when properly equipped.
g. Possesses a high degree of cross-country mobility to successfully exploit the effects of nuclear and nonnuclear weapons.
h. Provides a force that complements and enhances the inherent capabilities of tank elements, when employed in tank-infantry teams.
i. Provides a force that can participate in airmobile operations, when provided air transportation.
j. Provides limited air defense.
k. Participates in amphibious operations.
l. Maneuvers in all types of terrain and under all climatic conditions.
m. Participates in counterinsurgency operations as elements of brigade-size backup forces.
n. Performs organizational maintenance on organic equipment.
o. Depends on division artillery for nuclear fire support.

4. MOBILITY

One hundred-percent mobile in organic vehicles.

TOE 7-46H HHC, INF BN (MECH)

1. MISSION

To provide command, control, and supervision of the operations of the infantry battalion (mechanized) and attached units.

2. ASSIGNMENT

Organic to infantry battalion (mechanized), armored, infantry, or infantry (mechanized) division, TOE 7-45H.

3. CAPABILITIES

a. Provides command, control, staff planning, and supervision of operations of organic and attached elements of the infantry battalion (mechanized).
b. Provides supply and organizational maintenance support.
c. Provides centralized (battalion) or decentralized (company) messing, as required.
d. Provides communication support.
e. Provides unit-level medical service to the infantry battalion (mechanized), to include furnishing aidmen to the rifle companies and combat support company.
f. Performs organizational maintenance on organic equipment.
g. Depends on division artillery for nuclear fire support.

4. MOBILITY

One hundred-percent mobile in organic vehicles.

Figure 1-31—Continued

TOE 7-47H RIFLE CO, INF BN (MECH)

1. MISSION

To close with the enemy by means of fire and maneuver to destroy or capture him or to repel his assault by fire, close combat, and counterattack.

2. ASSIGNMENT

Organic to infantry battalion (mechanized), armored, infantry, or infantry (mechanized) division, TOE 7-45H.

3. CAPABILITIES

a. Closes with the enemy to destroy or capture him.
b. Repels enemy assault by fire, close combat, and counterattack.
c. Provides a base of fire and maneuver.
d. Seizes and holds terrain.
e. Maneuvers in all types of terrain and under all climatic conditions.
f. Capitalizes on all forms of mobility.
g. Performs organizational maintenance on organic equipment.

4. MOBILITY

One hundred-percent mobile in organic vehicles.

TOE 7-48H CBT SPT CO, INF BN (MECH)

1. MISSION

To provide reconnaissance, ground surveillance, indirect fire support, antitank support, and limited air defense support for the infantry battalion (mechanized).

2. ASSIGNMENT

Organic to infantry battalion (mechanized), armored, infantry, or infantry (mechanized) division, TOE 7-45H.

3. CAPABILITIES

a. Provides reconnaissance and ground radar surveillance.
b. Provides antitank and mortar support.
c. Provides limited air defense support.
d. Maneuvers in all types of terrain and under all climatic conditions.
e. Performs organizational maintenance on organic equipment.
f. Capitalizes on all forms of mobility.

4. MOBILITY

One hundred-percent mobile in organic vehicles.

Figure 1–31—Continued

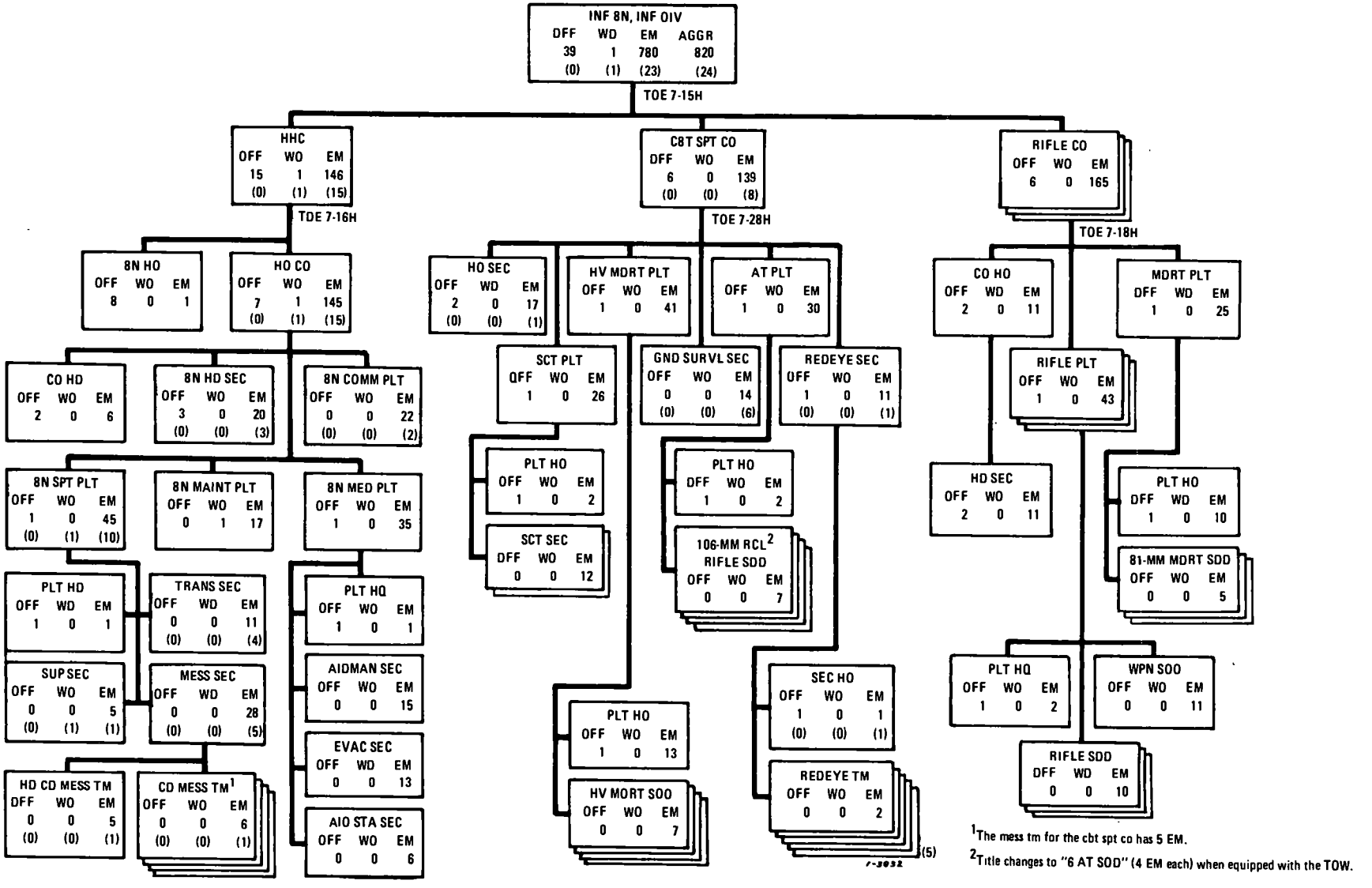

[1]The mess tm for the cbt spt co has 5 EM.

[2]Title changes to "6 AT SOD" (4 EM each) when equipped with the TOW.

Figure 1–32. Infantry battalion, infantry division.

TOE 7-15H INF BN, INF DIV

1. MISSION

To close with the enemy by means of fire and maneuver to destroy or capture him or to repel his assault by fire, close combat, and counterattack.

2. ASSIGNMENT

Organic to infantry division, TOE 7H.

3. CAPABILITIES

a. Provides a base of fire and maneuver elements.

b. Seizes and holds terrain.

c. Conducts independent operations on a limited scale.

d. Furnishes limited antitank protection.

e. Provides indirect fire support for organic and attached units.

f. Conducts long-range patrolling, when properly equipped.

g. Participates in motorized, mechanized, and joint airborne operations, when provided sufficient transportation.

h. Participates in airmobile operations, when provided sufficient air transportation.

i. Maneuvers in all suitable types of terrain and under all climatic conditions.

j. Participates in amphibious operations.

k. Provides limited air defense support.

l. Participates in counterinsurgency operations as elements of brigade-size backup forces.

m. Performs organizational maintenance on organic equipment.

4. MOBILITY

Mobility of units organic to this battalion is included in appropriate component TOE extracts.

TOE 7-16H HHC, INF BN, INF DIV

1. MISSION

To provide command, control, and supervision of the operations of the infantry battalion.

2. ASSIGNMENT

Organic to infantry battalion, infantry division, TOE 7-15H.

3. CAPABILITIES

a. Provides command, control, staff planning, and supervision of operations of organic and attached elements of the infantry battalion.

b. Provides supply and organizational maintenance support.

c. Provides centralized (battalion) or decentralized (company) messing, as required.

d. Provides communication support.

e. Provides unit-level medical service to the infantry battalion, to include furnishing aidmen to the rifle companies and combat support company.

f. Performs organizational maintenance on organic equipment and provides vehicular maintenance support for the rifle companies, TOE 7-18H.

4. MOBILITY

One hundred-percent mobile in organic vehicles.

Figure 1–32—Continued

TOE 7-18H RIFLE CO, INF BN, INF DIV

1. MISSION

To close with the enemy by means of fire and maneuver to destroy or capture him or to repel his assault by fire, close combat, and counterattack.

2. ASSIGNMENT

Organic to infantry battalion, infantry division, TOE 7-15H.

3. CAPABILITIES

a. Provides a base of fire and maneuver.
b. Closes with the enemy to destroy or capture him.
c. Seizes and holds terrain.
d. Repels enemy assault by fire, close combat, and counterattack.
e. Maneuvers in all types of terrain and under all climatic conditions.
f. Capitalizes on all forms of mobility.
g. Depends on HHC, infantry battalion, for medical and mess support and for maintenance of organic vehicles and on the combat support company for heavy antitank support.

4. MOBILITY

Thirty-percent mobile in organic vehicles.

TOE 7-28H CBT SPT CO, INF BN, INF DIV

1. MISSION

To provide reconnaissance, ground surveillance, indirect fire support, antitank support, and limited air defense support for the infantry battalion.

2. ASSIGNMENT

Organic to infantry battalion, infantry division, TOE 7-15H.

3. CAPABILITIES

a. Provides reconnaissance and ground radar surveillance.
b. Provides antitank and mortar support.
c. Provides limited air defense support.
d. Maneuvers in all types of terrain and under all climatic conditions.
e. Performs organizational maintenance on organic equipment.
f. Capitalizes on all forms of mobility.

4. MOBILITY

One hundred-percent mobile in organic vehicles.

Figure 1-32—Continued

Table 1-25. Summary of Equipment—Infantry Battalion (Mechanized), Armored, Infantry, and Infantry (Mechanized) Divisions

1	2	3	4	5	6	7
LIN	Nomenclature	HHC (7-46H)	3 rifle co (7-47H)		Cbt spt co (7-48H)	Bn total (7-45H)
			(1)	(3)		
	CLASS 7B—GROUND SUPPORT					
1 E69242	COMP RCP PWR DRVN + AIR REC GAS DRVN 15 CFM 175 PSI.	1	0	0	0	1
2 E70064	COMP RCP PWR DRVN + TRK 2 WHL PNEU TIRES GAS DRVN 5 CFM 175 PSI.	0	1	3	1	4
3 J42685	GEN ST GAS ENG + 0.3 KW AC 115V 1PH 400CY DC 24 TO 35V.	0	0	0	4 (6)	4 (6)
4 J43918	GEN ST GAS ENG + 1.5KW 60CY 1PH 2 WIRE AC 120V SHOCK.	4	0	0	1	5
5 J44055	GEN ST GAS ENG + 1.5KW DC 28V SHOCK	2	0	0	0	2
6 J47068	GEN ST GAS ENG + 5KW 60CY 1-3PH AC 120/240 120/208V SKD-SHK MTD.	1	0	0	0	1
	CLASS 7G—ELECTRONICS					
7 Q16109	RADAR SET + AN/PPS-5 LESS POWER	0	0	0	4 (6)	4 (6)
8 Q34308	RADIO SET AN/GRC-160	0	5	15	26	41
9 Q38299	RADIO SET + AN/PRC-77	4	8	24	6 (6)	34 (6)
10 Q45779	RADIO SET AN/VRC-12	2	0	0	1	3
11 Q53001	RADIO SET AN/VRC-46	13	1	3	5	18
12 Q54154	RADIO SET AN/VRC-47	5	4	12	7	24
13 Q55114	RADIO SET AN/VRC-49	1	0	0	0	1
14 Q56783	RADIO SET AN/VRC-64	4	13	39	2	45
15 U81707	SWITCHBOARD TELEPHONE MANUAL + SB-22/PT.	2	1	3	2	7
16 U82529	SWITCHBOARD TELEPHONE MANUAL + SB-993/GT.	0	1	3	3	6
17 V30252	TELEPHONE SET + TA-1/PT	0	25	75	0	75
18 V31211	TELEPHONE SET + TA-312/PT	12	3	9	32 (6)	53 (6)
	CLASS 7K—TACTICAL VEHICLES					
19 D11401	CARRIER COMMAND AND RECONNAISSANCE + ARMORED.	2	1	3	10	15
20 D11538	CARRIER COMMAND POST + LIGHT TRACKED	6	0	0	1	7
21 D12086	CARRIER PERSONNEL FULL TRACKED + ARMORED.	3	14	42	2	47
22 W95400	TRAILER CARGO + 1/4 TON 2 WHEEL W/E	11	2	6	20 (6)	37 (6)
23 W95537	TRAILER CARGO + 3/4 TON 2 WHEEL W/E	7	1	3	1	11
24 W95811	TRAILER CARGO + 1-1/2 TON 2 WHEEL W/E	12	2	6	2	20
25 W98825	TRAILER TANK + WATER 400 GALLON 1-1/2 TON 2 WHEEL W/E.	5	0	0	0	5
26 X38639	TRUCK AMBULANCE + 1/4 TON 4×4 W/E	3	0	0	0	3
27 X39735	TRUCK CARGO + 3/4 TON 4×4 W/E	5	0	0	0	5
28 X39872	TRUCK CARGO + 3/4 TON 4×4 W/WINCH W/E	2	1	3	6	11
29 X40009	TRUCK CARGO + 2-1/2 TON 6×6 W/E	6	1	3	1	10
30 X40146	TRUCK CARGO + 2-1/2 TON 6×6 W/WINCH W/E	1	1	3	1	5
31 X40831	TRUCK CARGO + 5 TON 6×6 LWB W/E	6	0	0	0	6
32 X40968	TRUCK CARGO + 5 TON 6×6 LWB W/WINCH W/E.	8	0	0	0	8
33 X60833	TRUCK UTILITY + 1/4 TON 4×4 W/E	11	2	6	12 (6)	29 (6)
34 X61244	TRUCK UTILITY + 1/4 TON 4×4 CARRIER FDR 106 MM RIFLE W/E.	0	0	0	8	8
35 X62340	TRUCK VAN + SHOP 2-1/2 TON 6×6 W/E	2	0	0	0	2
36 X63299	TRUCK WRECKER + 5 TON 6×6 W/WINCH W/E	1	0	0	0	1

Table 1-25. Summary of Equipment—Infantry Battalion (Mechanized), Armored, Infantry, and Infantry (Mechanized) Divisions—Continued

1	2	3	4	5	6	7
LIN	Nomenclature	HHC (7-46H)	3 rifle co (7-47H)		Cbt spt co (7-48H)	Bn total (7-45H)
			(1)	(3)		
	CLASS 7M—WEAPONS					
37 G02204	DETECTING SET MINE+ PTBL METALLIC AND NONMETALLIC.	1	0	0	0	1
38 G02341	DETECTING SET MINE+ PTBL METALLIC	3	0	0	0	3
39 L44595	LAUNCHER GRENADE+ 40 MILLIMETER	6	24	72	16	94
40 L91975	MACHINE GUN CALIBER .50+ HB FLEXIBLE FOR GROUND USE.	22	1	3	1	26
41 L92386	MACHINE GUN 7.62 MILLIMETER+ LIGHT FLEXIBLE.	4	15	45	0	49
42 M60808	MORTAR 81 MILLIMETER+ ON MOUNT	0	3	9	0	9
43 M68282	MORTAR 4.2 INCH+ ON MOUNT	0	0	0	4	4
44 M75577	MOUNT TRIPOD MACHINE GUN+ HEAVY CALIBER 50.	22	1	3	1	26
45 M75714	MOUNT TRIPOD MACHINE GUN+ 7.62 MILLIMETER.	4	15	45	0	49
46 N96741	PISTOL CALIBER .45 AUTOMATIC+	33	33	99	32	164
47 R50543	RECOVERY VEHICLE FULL TRACKED+ LIGHT ARMORED.	2	1	3	1	6
48 R94977	RIFLE 5.56 MILLIMETER+ W/E	144 (40)	156 (2)	468 (6)	115 (27)	727 (73)
49 R96484	RIFLE RECOILLESS 90 MILLIMETER+	0	6	18	0	18
50 R96758	RIFLE RECOILLESS 106 MILLIMETER+ ON MOUNT.	0	0	0	8	8
51 U56346	SUBMACHINE GUN CALIBER .45+	4	2	6	2	12
	CLASS 7N—SPECIAL WEAPONS					
52 H68063	FLAME THROWER PORTABLE+	9	0	0	0	9
	CLASS 7Q—GENERAL EQUIPMENT					
53 V12141	TANK AND PUMP UNIT LIQUID DISPENSING TRUCKMOUNTING.	4	0	0	0	4
54 V19950	TANK UNIT LIQUID DISPENSING TRAILER MOUNTING+.	4	0	0	0	4

Table 1-26. Summary of Equipment—Infantry Battalion, Infantry Division

1	2	3	4	5	6	7
LIN	Nomenclature	HHC (7-16H)	3 rifle co (7-18H)		Cbt spt co (7-28H)	Bn total (7-15H)
			(1)	(3)		
	CLASS 7B—GROUND SUPPORT					
1 E69242	COMP RCP PWR DRVN+ AIR REC GAS DRVN 15 CFM 175 PSI.	1	0	0	0	1
2 E70064	COMP RCP PWR DRVN+ TRK 2 WHL PNEU TIRES GAS DRVN 5 CFM 175 PSI.	0	0	0	1	1
3 J42685	GEN ST GAS ENG+ 0.3 KW AC 115V 1PH 400CY DC 24 TO 35V.	0	0	0	4(4)	4(4)
4 J43918	GEN ST GAS ENG+ 1.5KW 60CY 1PH 2 WIRE AC 120V SHOCK.	3	0	0	1	4
5 J44055	GEN ST GAS ENG+ 1.5KW DC 28V SHOCK	2	0	0	0	2
6 J47068	GEN ST GAS ENG+ 5KW 60CY 1-3PH AC 120 240 120/208V SKID-SHK MTD.	1	0	0	0	1
	CLASS 7G—ELECTRONICS					
7 Q16109	RADAR SET+ AN/PPS-5 LESS POWER	0	0	0	4(4)	4(4)
8 Q34308	RADIO SET AN/GRC-160	0	4	12	23	35
9 Q38299	RADIO SET+ AN/PRC-77	7	10	30	6(4)	43(4)
10 Q53001	RADIO SET AN/VRC-46	12	0	0	5	17
11 Q54154	RADIO SET AN/VRC-47	4	2	6	7	17
12 Q55114	RADIO SET AN/VRC-49	1	0	0	0	1
13 Q56783	RADIO SET AN/VRC-64	1	0	0	7	8
14 Q90120	RADIO TELETYPETRITER SET+ AN/GRC-142 LESS POWER.	1	0	0	0	1
15 U81707	SWITCHBOARD TELEPHONE MANUAL+ SB-22/PT.	2	1	3	2	7
16 U82255	SWITCHBOARD TELEPHONE MANUAL+ SB-86/P.	1	0	0	0	1
17 U82529	SWITCHBOARD TELEPHONE MANUAL+ SB-993/GT.	0	2	6	3	9
18 V30252	TELEPHONE SET+ TA-1/PT	0	26	78	7	85
19 V31211	TELEPHONE SET+ TA-312/PT	17	3	9	22(4)	48(4)
	CLASS 7K—TACTICAL VEHICLES					
20 W95400	TRAILER CARGO+ 1/4 TON 2 WHEEL W/E	15	3	9	21(4)	45(4)
21 W95537	TRAILER CARGO+ 3/4 TON 2 WHEEL W/E	15	3	9	6	30
22 W95811	TRAILER CARGO+ 1-1/2 TON 2 WHEEL W/E	14	1	3	2	19
23 W98825	TRAILER TANK+ WATER 400 GALLON 1-1/2 TON 2 WHEEL W/E.	5	0	0	0	5
24 X38639	TRUCK AMBULANCE+ 1/4 TON 4×4 W/E	6	0	0	0	6
25 X39735	TRUCK CARGO+ 3/4 TON 4×4 W/E	13	3	9	6	28
26 X39872	TRUCK CARGO+ 3/4 TON 4×4 W/WINCH W/E	2	0	0	5	7
27 X40009	TRUCK CARGO+ 2-1/2 TON 6×6 W/E	10	0	0	0	10
28 X40146	TRUCK CARGO+ 2-1/2 TON 6×6 W/WINCH W/E	6	1	3	2	11
29 X40968	TRUCK CARGO+ 5 TON 6×6 LWB W/WINCH W/E.	2	0	0	0	2
30 X60833	TRUCK UTILITY+ 1/4 TON 4×4 W/E	16	3	9	22(2)	47(2)
31 X61244	TRUCK UTILITY+ 1/4 TON 4×4 CARRIER FDR 106MM RIFLE W/E.	0	0	0	8	8
32 X62340	TRUCK VAN+ SHOP 2-1/2 TON 6×6 W/E	1	0	0	0	1
33 X63299	TRUCK WRECKER+ 5 TON 6×6 W/WINCH W/E	1	0	0	0	1
	CLASS 7M—WEAPONS					
34 G02204	DETECTING SET MINE+ PTBL METALLIC AND NONMETALLIC.	1	0	0	1	2

Table 1-26. Summary of Equipment—Infantry Battalion, Infantry Division—Continued

1 LIN (7-16H)		2 Nomenclature (7-18H) (7-28H) (7-15H)	3 HHC (7-16H)	4 3 rifle co (7-18H) (1)	5 (3)	6 Cbt spt co (7-28H)	7 Bn total (7-15H)
35	G02341	DETECTING SET MINE+ PTBL METALLIC	3	0	0	3	6
36	L91975	MACHINE GUN CALIBER .50+ HB FLEXIBLE FOR GROUND USE.	14	0	0	0	14
37	L92386	MACHINE GUN 7.62 MILLIMETER+ LIGHT FLEXIBLE.	2	6	18	8	28
38	M68008	MORTAR 81 MILLIMETER+ ON MOUNT	0	3	9	0	9
39	M68282	MORTAR 4.3 INCH+ ON MOUNT	0	0	0	4	4
40	M75577	MOUNT TRIPOD MACHINE GUN+ HEAVY CALIBER 50.	14	0	0	0	14
41	M75714	MOUNT TRIPOD MACHINE GUN+ 7.62 MILLIMETER.	2	6	18	8	28
42	N96741	PISTOL CALIBER .45 AUTOMATIC+	20	31	93	30	143
43	R94977	RIFLE 5.56 MILLIMETER+ W/E	142(16)	140	420	115(16)	677(32)
44	R96484	RIFLE RECOILLESS 90 MILLIMETER+	0	6	18	0	18
45	R96758	RIFLE RECOILLESS 106 MILLIMETER+ ON MOUNT.	0	0	0	8	8
		CLASS 7N—SPECIAL WEAPONS					
46	H68063	FLAME THROWER PORTABLE+	9	0	0	0	9
		CLASS 7Q—GENERAL EQUIPMENT					
47	V12141	TRUCK AND PUMP UNIT LIQUID DISPENSING TRUCKMOUNTING+.	2	0	0	0	2
48	V19950	TANK UNIT LIQUID DISPENSING TRAILER MOUNTING.+	2	0	0	0	2

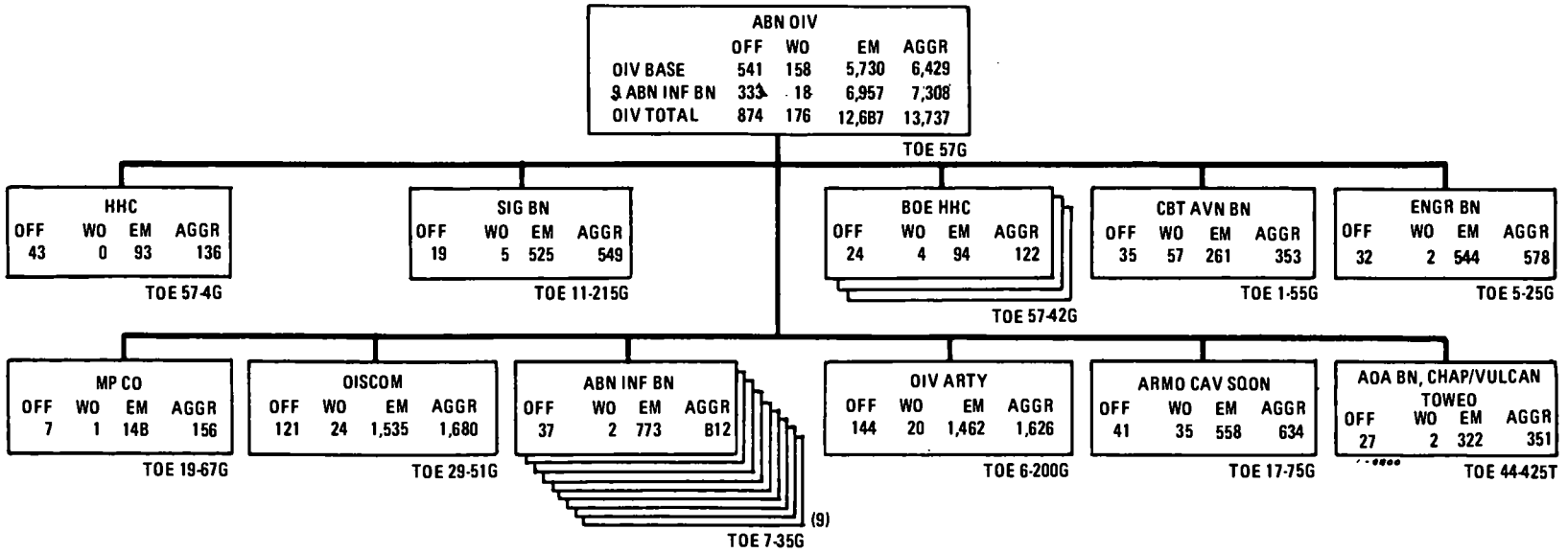

Figure 1-33. A type of airborne division.

1. MISSION

a. To move by air and by airborne assault to seize and hold assigned objectives and to close with the enemy to destroy or capture him in an unsophisticated or semi-sophisticated environment until ground linkup can be accomplished or until reinforced by air or surface landing.

b. To move by air and by airborne assault, *when reinforced,* to seize and hold assigned objectives in sophisticated operational environments.

c. To execute small-scale airborne commando-type operations to perform a selected mission.

d. To move by air on short notice to any oversea land areas as a deterrent or resistance force in any threatened area.

2. ASSIGNMENT

To theater or army group.

3. CAPABILITIES

a. Executes airborne assault by means of parachute drop or air landing.

b. Closes with the enemy to destroy or capture him, utilizing fire, maneuver, and close combat.

c. When organized for combat with additional combat, combat support, and combat service support units, can conduct sustained ground operations.

d. Acts alone or as part of a larger force.

e. Conducts airmobile operations.

4. MOBILITY

Mobility of units organic to this division is included in appropriate component TOE extracts.

Figure 1-33—Continued

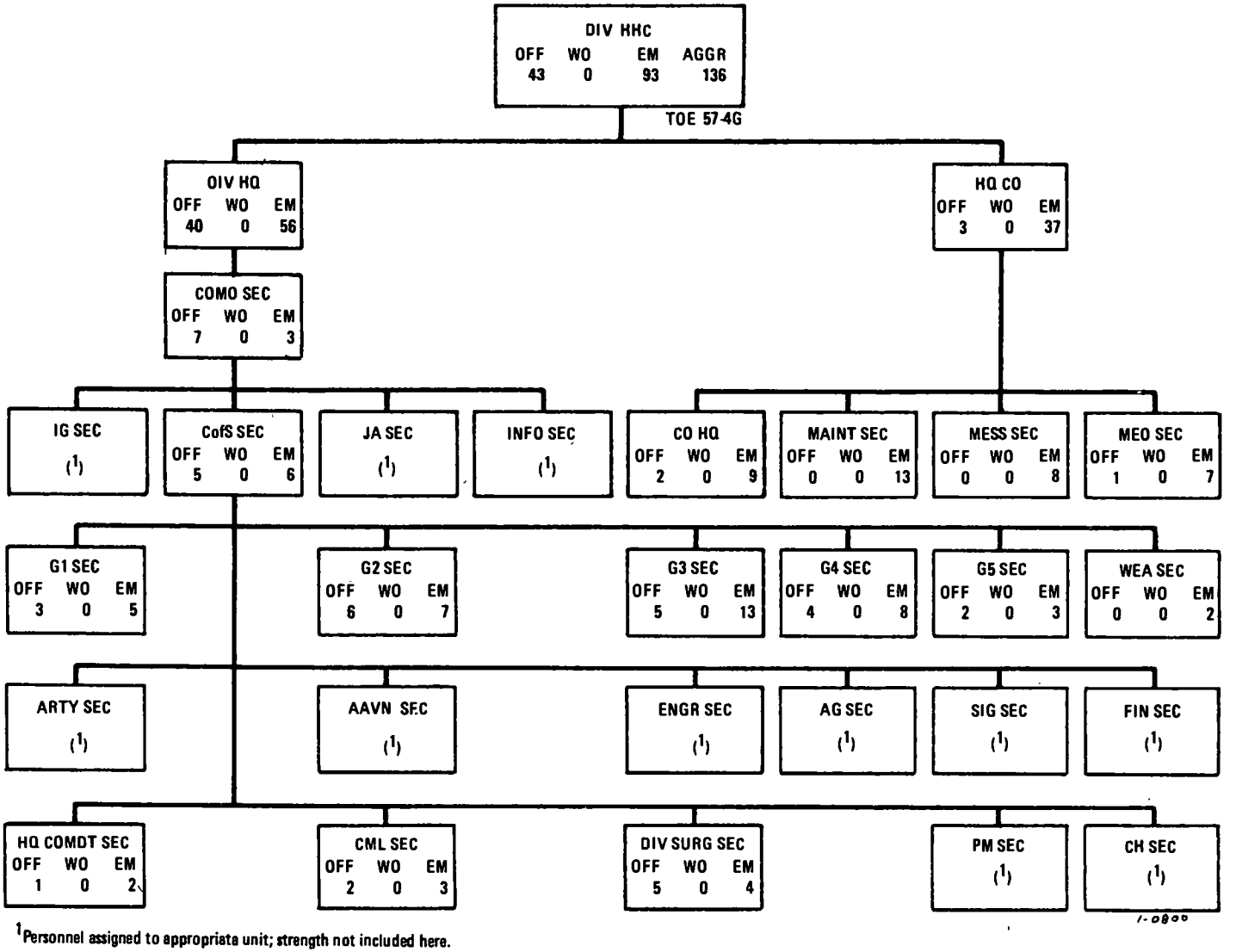

[1]Personnel assigned to appropriate unit; strength not included here.

Figure 1–34. HHC, airborne division.

1. MISSION

a. HQ. To command, control, and supervise operations of the division and attached units.

b. HQ company. To provide personnel and administrative support for the HQ.

2. ASSIGNMENT

Organic to airborne division, TOE 57G.

3. CAPABILITIES

a. HQ. Provides command, staff planning, control, and supervision of administration and operations of the division and attached units and operates simultaneously a main and alternate CP, when required.

b. HQ company. Provides mess, administration, supply, and maintenance support for division HQ. Provides mess support for liaison and other attached personnel or teams and the military police company.

c. The medical section provides medical service, to include emergency treatment, evacuation, operation of division HQ aid station, and supervision of sanitation.

d. Can carry out air transport or parachute operations.

e. Depends on the division administration company, TOE 12-157G, for all personnel services.

4. MOBILITY

a. Seventy-five-percent mobile in organic transportation.

b. One hundred-percent air transportable in medium transport aircraft.

Figure 1–34—Continued

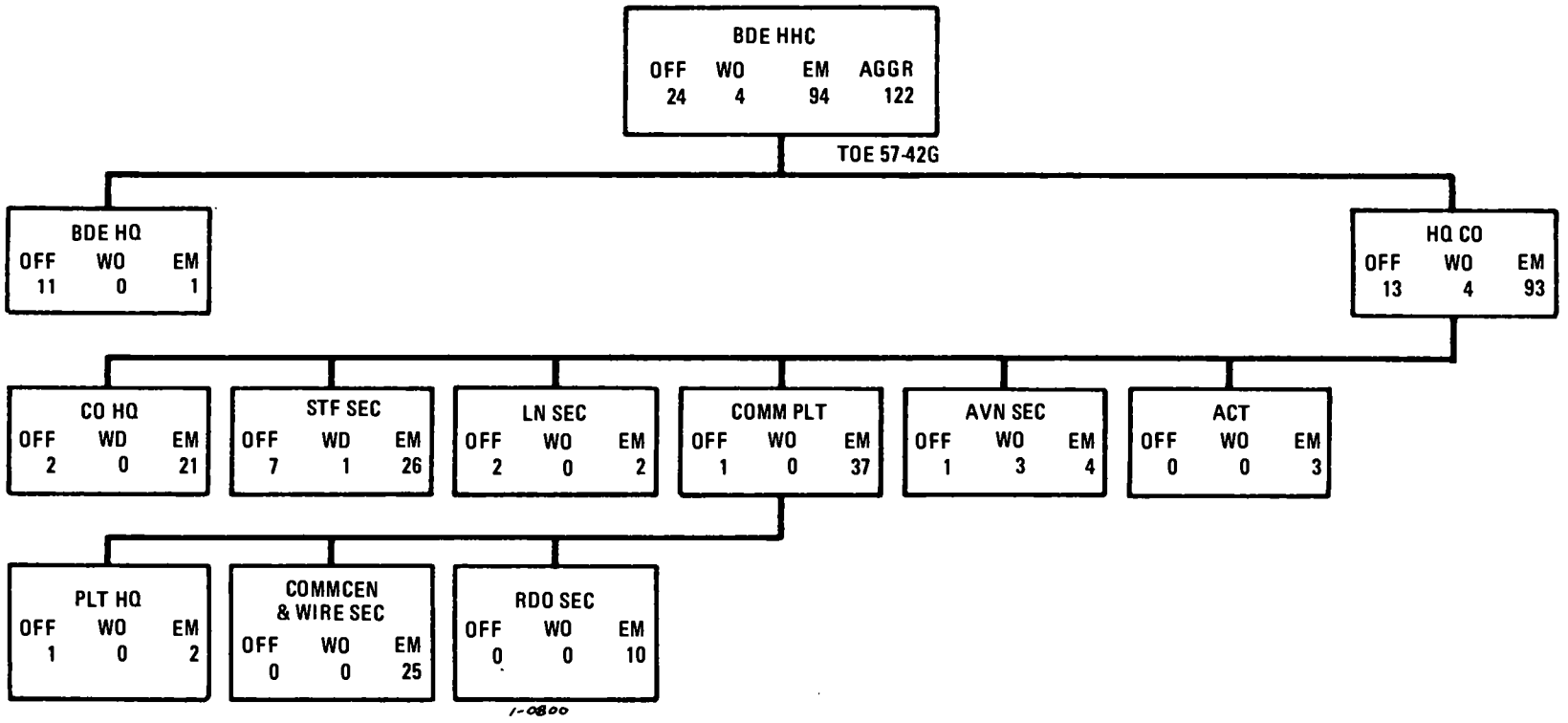

Figure 1–35. HHC, airborne division brigade.

1. MISSION

To command and control attached combat and combat support elements in training and operations.

2. ASSIGNMENT

Organic to airborne division, TOE 57G.

3. CAPABILITIES

a. Commands attached elements of the divisional combat, combat support, and combat service support elements in offensive and defensive combat operations.

b. Accepts or releases attached elements on short notice.

c. Conducts brigade operations on a sustained 24-hour-a-day basis.

d. Supervises the movement and security of attached or supporting administrative elements.

e. Establishes liaison with higher and adjacent HQ.

f. Supervises tactical training of attached divisional elements.

g. Acts as emergency successor to operational HQ for the division in the event the latter is incapable of operating.

h. Conducts independent operations, when augmented by sufficient transportation and administrative support elements.

i. Provides operational control for up to five maneuver battalions.

j. Performs organizational maintenance on organic equipment.

k. Provides limited Army aviation support to attached elements.

l. Depends on the division administration company, TOE 12-157G, for personnel services.

4. MOBILITY

a. Sixty-three-percent mobile in organic transportation.

b. One hundred-percent air transportable in medium transport aircraft.

***Figure 1–35*—Continued**

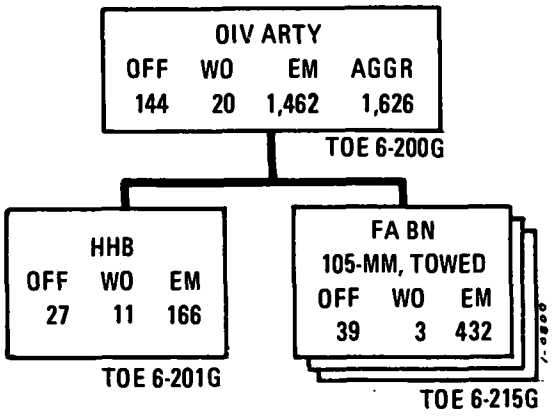

1. MISSION
   To provide field artillery support for an airborne division.
2. ASSIGNMENT
   Organic to airborne division, TOE 57G.
3. CAPABILITIES
   a. Provides field artillery fire support to an airborne division.
   b. Establishes the fire support element of the division tactical operations center.
   c. Possesses cross-country mobility.
   d. Commands and controls attached field artillery units.
   e. Provides communications, target acquisition, and survey.
   f. Lands by parachute and aircraft.
4. MOBILITY
   a. Seventy-five-percent mobile in organic transportation.
   b. One hundred-percent air transportable in medium transport aircraft.

Figure 1-36. Airborne division artillery.

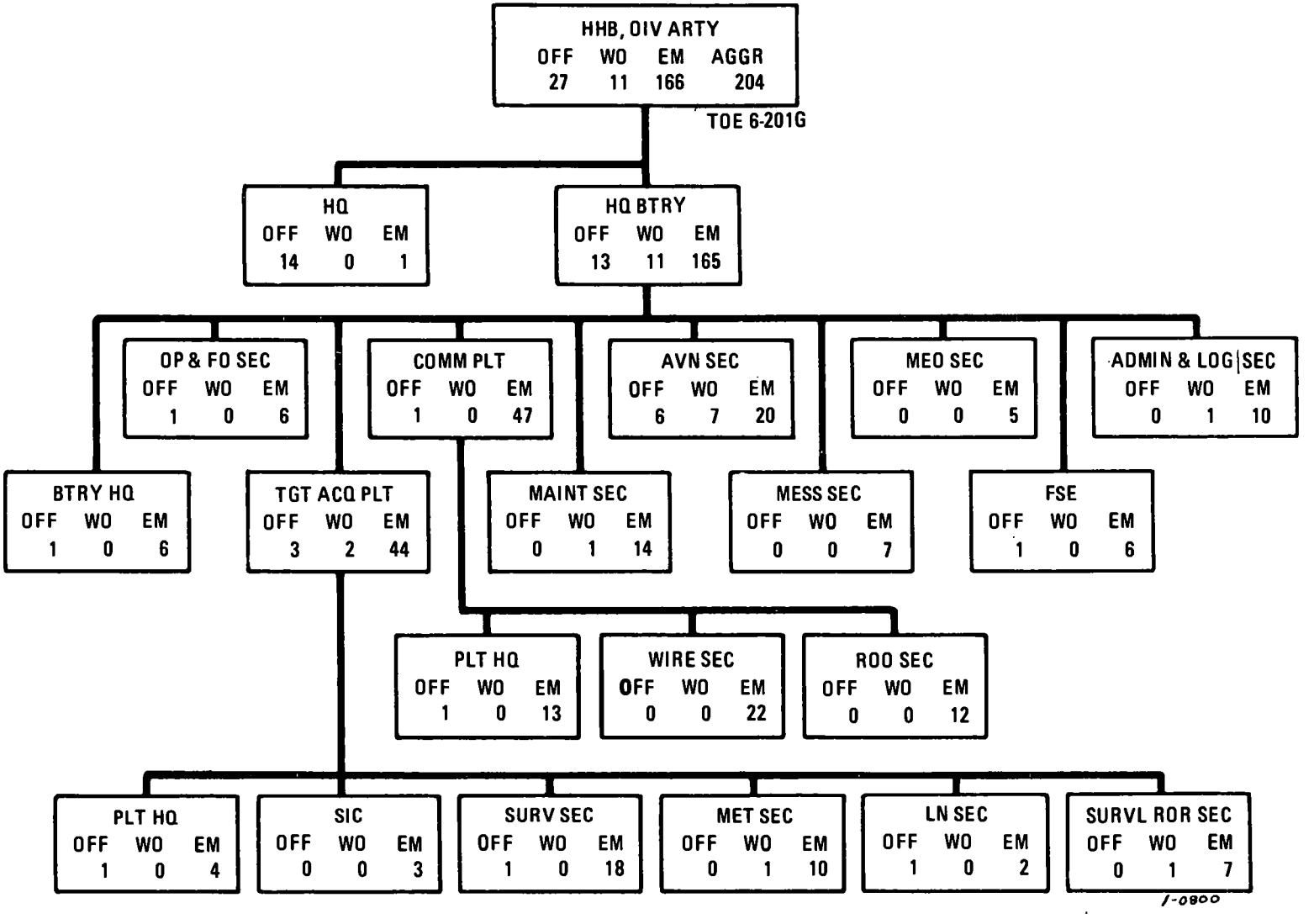

Figure 1–37. HHB, airborne division artillery.

1. MISSION

To direct and coordinate operations of division artillery and attached units and to provide facilities for the control of these units.

2. ASSIGNMENT

Organic to airborne division artillery, TOE 6-200G.

3. CAPABILITIES

a. Provides target acquisition.

b. Provides communications.

c. Provides artillery survey.

d. Provides ballistic meteorology.

e. Provides logistic supervision.

f. Lands by parachute and aircraft.

g. Provides unit-level medical service to HHB, airborne division artillery.

h. Depends on the division administration company, TOE 12-157G, for personnel administrative support.

4. MOBILITY

a. One hundred-percent mobile in organic transportation.

b. One hundred-percent air transportable in medium transport aircraft.

Figure 1–37—Continued

Table 1-27. Summary of Equipment—Type of Airborne Division

1 LIN	2 Nomenclature	3 HHC (57-4G)	4 Cbt avn bn (1-55G)	5 Engr bn (5-25G)	6 Div arty (6-200G)	7 DISCOM (29-51G)	8 Sig bn (11-215G)	9 Armd cav sqdn (17-75G)	10 3 bde HHC (57-42G) (1)	11 3 bde HHC (57-42G) (3)	12 MP co (19-67G)	13 9 abn inf bn (7-35G) (1)	14 9 abn inf bn (7-35G) (9)	15 ADA bn (44-425T)	16 Div total (57G)
	CLASS 2A—AIR														
1 X23227	TRANSPORTER AIR-MOBILE+ HYD LIFT FOR SHELTER AND X-4 CONTAINER.	0	2	0	1	7	0	1	1	3	0	0	0	0	14
	CLASS 2Q—GENERAL EQUIPMENT														
2 W98270	TRAILER PLATFORM WAREHOUSE+ 6000 LB CAP 108L×48W IN PNEUM.	0	0	0	0	30	0	0	0	0	0	0	0	0	30
3 Z13157	CARD PUNCH MACHINE+ ADPE.	0	0	0	0	6	0	0	0	0	0	0	0	0	6
4 Z15494	COLLATOR+ ADPE	0	0	0	0	2	0	0	0	0	0	0	0	0	2
5 Z20571	DATA TRANSCEIVER CARD UNIT+ ADPE.	0	0	0	0	2	0	0	0	0	0	0	0	0	2
6 Z20669	DATA TRANSMISSION EQUIPMENT+ ADPE.	0	0	0	0	2	0	0	0	0	0	0	0	0	2
7 Z25208	ELECTRONIC COMPUTER+ ADPE.	0	0	0	0	1	0	0	0	0	0	0	0	0	1
8 Z35210	INTERPRETER+ ADPE	0	0	0	0	1	0	0	0	0	0	0	0	0	1
9 Z74660	SORTER+ ADPE	0	0	0	0	3	0	0	0	0	0	0	0	0	3
10 Z95673	VERIFIER+ ADPE	0	0	0	0	6	0	0	0	0	0	0	0	0	6
	CLASS 7A—AIR														
11 K30645	HELICOPTER OBSERVATION+ CH-6A.	0	4	0	9	0	0	9	4	12	0	0	0	0	34
12 K31749	HELICOPTER UTILITY+ UH-1B.	0	6	0	2	0	0	11	0	0	0	0	0	0	19
13 K31786	HELICOPTER UTILITY+ UH-1D.	0	27	0	0	2	0	6	0	0	0	0	0	0	35
	CLASS 7B—GROUND SUPPORT														
14 E68694	COMP RCP PWR DRVN+ AIR REC AC 208-416V 60CY 3PH 15 CFM 175 PSI.	0	0	0	0	3	0	0	0	0	0	0	0	0	3

Table 1-27. Summary of Equipment—Type of Airborne Division—Continued

1 LIN	2 Nomenclature	3 HHC (57-4G)	4 Cbt avn bn (1-55G)	5 Engr bn (5-25G)	6 Div arty (6-200G)	7 DISCOM (29-51G)	8 Sig bn (11-215G)	9 Armd cav sqdn (17-75G)	10 11 3 bde HHC (57-42G) (1)	(3)	12 MP co (19-67G)	13 14 9 abn inf bn (7-85G) (1)	(9)	15 ADA bn (44-425T)	16 Div totgl (57G)
15 E69105	COMP RCP PWR DRVN+ AIR REC GAS DRVN 5 CFM 175 PSI.	0	0	0	0	5	0	0	0	0	0	0	0	0	5
16 E69242	COMP RCP PWR DRVN+ AIR REC GAS DRVN 15 CFM 175 PSI.	0	0	0	3	0	0	0	0	0	0	0	0	0	3
17 E70064	COMP RCP PWR DRVN+ TRK 2 WHL PNEU TIRES GAS DRVN 5 CFM 175 PSI.	0	2	0	13	3	0	0	0	0	1	0	0	3	22
18 E73626	COMP RTY PWR DRVN+ AIR WHBRW FR 2 PNU TIRE GAS DRV 60 CFM 6.5 PSI.	0	0	0	0	0	0	0	0	0	0	2	18	0	18
19 F43077	CRANE WHL MTD+ 7 TON W/BOOM CRANE 24 FT W/BLK TKLE 9 FT.	0	0	0	0	3	0	0	0	0	0	0	0	0	3
20 J35835	GEN ST DSL ENG+ 15KW 60CY 3PH AC 120/208 240/416V SKID.	0	0	0	0	7	0	0	0	0	0	0	0	0	7
21 J36109	GEN ST DSL ENG+ 30KW 60CY 3PH AC 120/208 240/416V 50CY SKID.	0	0	0	0	2	0	0	0	0	0	0	0	0	2
22 J41041	GENERATOR SET GASOLINE ENGINE TRAILER MTD+ PU-253/U.	0	1	0	0	0	0	0	0	0	0	0	0	0	1
23 J41178	GENERATOR SET GASOLINE ENGINE TRAILER MTD+ PU 290/MR.	0	0	0	0	13	0	0	0	0	0	0	0	0	13
24 J41589	GENERATOR SET GASOLINE ENGINE TRAILER MTD+ PU-322/G.	0	0	0	0	0	9	0	1	3	0	0	0	0	12
25 J42685	GEN ST GAS ENG+ 0.3 KW AC 115V 1PH 400CY DC 24 TO 35V.	0	0	0	0	0	0	6	0	0	0	2	18	0	24
26 J42856	GEN ST GAS ENG+	0	0	0	0	0	0	0	0	0	0	0	0	6	6

		0.5KW 28V DC SKID-SHOCK.														
27	J42959	GEN ST GAS ENG+ 0.5KW 60CY 1PH AC 120V SHK.	0	4	0	3	1	0	0	0	0	0	0	0	0	8
28	J43233	GEN ST GAS ENG+ 0.5KW 2 WIRE DC 28V SHK.	0	0	0	16	0	0	0	0	0	1	0	0	0	17
29	J43918	GEN ST GAS ENG+ 1.5KW 60CY 1PH 2 WIRE AC 120V SHOCK.	1	2	4	18	21	1	2	2	6	2	0	0	4	61
30	J44055	GEN ST GAS ENG+ 1.5KW DC 28V SHOCK.	0	0	0	15	16	0	6	2	6	3	2	18	6	70
31	J45699	GEN SET GAS ENG+ 3KW 60CY 1-3PH 120/240V 120/208V SKID SHOCK.	0	2	8	4	11	0	2	0	0	0	1	9	0	36
32	J46110	GEN SET GAS ENG+ 3KW DC 28V SKID-SHK.	0	0	0	0	0	0	0	0	0	0	0	0	6	6
33	J47068	GEN ST GAS ENG+ 5KW 60CY 1-3PH AC 120/240 120/208V SKD-SHD MTD.	5	3	0	0	20	0	0	0	0	0	0	0	0	28
34	J48713	GEN ST GAS ENG+ 5KW 400CY 1-3PH AC 120/240 120/208V SKD.	0	0	0	0	0	0	0	0	0	0	0	0	12	12
35	J74920	GRADER ROAD MOTOR-IZED+ DSL DRVN 10000 LB 12 FT BLADE W/LEAN FRTWHL	0	0	4	0	0	0	0	0	0	0	0	0	0	4
36	L76351	LOADER SCOOP TYPE+ DSL DRVN 4 WHLS 1-1/2 CU YD.	0	0	4	0	0	0	0	0	0	0	0	0	0	4
37	P11866	PNEUMATIC TOOL AND COMPRESSOR OUT-FIT+ 250 CFM TRLR MTD.	0	0	2	0	0	0	0	0	0	0	0	0	0	2
38	P91756	PUMP CENTRF+ GAS DRVN FRAME MTD 1-1/2 IN 65GPM 50 FT HD.	0	0	6	0	0	0	0	0	0	0	0	0	0	6
39	P96640	PUMPING ASSEMBLY FLAMMABLE LIQUID BULK TRANSFER+.	0	11	1	6	9	0	2	2	6	0	0	0	0	35
40	W80378	TRACTOR FULL TRCKD LOW SPD+ DSL LIGHT DBP W/BULDOZ SCARIF TETH PC.	0	0	6	0	0	0	0	0	0	0	0	0	0	6

Table 1-27. Summary of Equipment—Type of Airborne Division—Continued

1 LIN	2 Nomenclature	3 HHC (57-4G)	4 Cbt avn bn (1-55G)	5 Engr bn (5-25G)	6 Div arty (6-200G)	7 DISCOM (29-51G)	8 Sig bn (11-215G)	9 Armd cav sqdn (17-75G)	10 3 bde HHC (57-42G) (1)	11 (3)	12 MP co (19-67G)	13 9 abn inf bn (7-85G) (1)	14 (9)	15 ADA bn (44-425T)	16 Div total (57G)
41 W89557	TRACTOR WHEELED WAREHOUSE+ GAS 4000 LB.	0	0	0	0	4	0	0	0	0	0	0	0	0	4
42 X48846	TRUCK FIFT FORK AIRMBLE+ MULTI-FUEL 4000 LB CAP ROUGH TERRAIN.	0	0	0	0	7	0	0	0	0	0	0	0	0	7
43 X48914	TRUCK LIFT FORK+ DSL DRVN 6000 LB CAP ROUGH TERRAIN.	0	0	0	0	1	0	0	0	0	0	0	0	0	1
44 X49051	TRUCK LIFT FORK+ DSL DRVN 10000 LB CAP ROUGH TERRAIN.	0	0	0	0	3	0	0	0	0	0	0	0	0	3
45 Y35212	WATER PURIF EQUIP+ TRLR MTD DIATO-MITE FILTER 600 GPH.	0	0	5	0	0	0	0	0	0	0	0	0	0	5
	CLASS 7G—ELECTRONICS														
46 Q15414	RADAR SET+ AN/MPQ-4 LESS POWER.	0	0	0	3	0	0	0	0	0	0	0	0	0	3
47 Q16046	RADAR SET+ AN/MPQ-49 (FAAR).	0	0	0	0	0	0	0	0	0	0	0	0	12	12
48 Q17332	RADAR SET+ AN/TPS-25 LESS POWER.	0	0	0	1	0	0	0	0	0	0	0	0	0	1
49 Q32756	RADIO SET AN/GRC-106_	4	4	1	2	1	6	4	4	12	1	1	9	6	50
50 Q33474	RADIO SET AN/GRC-125_	0	2	0	62	0	0	25	0	0	0	25	225	0	314
51 Q35454	RADIO SET+ AN/PRC-6_	0	0	0	0	0	0	0	0	0	8	54	486	0	494
52 Q38299	RADIO SET+ AN/PRC-77_	0	0	0	0	0	0	0	0	0	4	0	0	0	4
53 Q42092	RADIO SET+ AN/URC-10_	0	37	0	11	2	0	26	4	12	0	0	0	0	88
54 Q50421	RADIO SET AN/VRC-24__	0	2	0	0	0	1	3	3	9	0	1	9	0	24
55 Q53001	RADIO SET AN/VRC-46__	9	4	15	70	21	14	21	10	30	21	20	180	10	395
56 Q54154	RADIO SET AN/VRC-47__	1	1	8	18	11	1	23	2	6	4	2	18	53	144
57 Q55114	RADIO SET AN/VRC-49__	0	2	1	4	1	9	3	1	3	0	1	9	3	35
58 Q55510	RADIO SET AN/VRC-53__	0	0	0	0	0	0	8	0	0	0	0	0	0	8
59 Q90100	RADIO TELETYPE-WRITER SET+ AN/GRC-122 LESS POWER.	0	0	0	0	0	0	0	0	0	0	0	0	1	1
60 U81707	SWITCHBOARD TELE-	0	4	2	19	6	8	4	1	3	0	6	54	10	110

		PHONE MANUAL+ SB-22/PT.														
61	U82255	SWITCHBOARD TELEPHONE MANUAL+ SB-86/P.	0	0	0	2	0	6	0	2	6	0	0	0	1	15
62	U82529	SWITCHBOARD TELEPHONE MANUAL+ SB-993/GT.	0	0	12	18	8	0	0	0	0	0	5	45	0	83
63	V30252	TELEPHONE SET+ TA-1/PT.	0	5	36	0	6	0	1	0	0	4	60	540	24	616
64	V30937	TELEPHONE SET+ TA-264/PT.	0	0	0	5	0	0	0	0	0	0	0	0	0	5
65	V31211	TELEPHONE SET+ TA-312/PT.	2	29	36	410	73	241	46	22	66	5	72	648	80	1636
66	V41968	TELETYPEWRITER SET+ AN/GGC-3.	0	0	0	0	0	13	0	0	0	0	0	0	0	13
67	V42105	TELETYPEWRITER SET+ AN/PGC-1.	0	0	0	0	0	13	0	0	0	0	0	0	0	13
		CLASS 7K— TACTICAL VEHICLES														
68	E02670	CHASSIS TRAILER+ GENERAL PURPOSE 3-1/2 TON 2 WHEEL W/E.	0	0	0	0	2	0	0	0	0	0	0	0	0	2
69	E02807	CHASSIS TRAILER+ GENERATOR 2-1/2 TON 2 WHEEL W/E.	0	0	0	0	6	0	0	0	0	0	0	0	0	6
70	G34805	DOLLY SET LIFT TRANSPORTABLE SHELTER+ 2-1/2 TON.	0	0	0	0	41	0	0	0	0	0	0	0	0	41
71	S72024	SEMITRAILER STAKE+ 12 TON 4 WHEEL W/E.	0	0	0	0	3	0	0	0	0	0	0	0	0	3
72	S74079	SEMITRAILER VAN+ CARGO 12 TON 4 WHEEL W/E.	0	0	0	0	7	0	0	0	0	0	0	0	0	7
73	S74490	SEMITRAILER VAN+ EXPANSIBLE 6 TON 4 WHEEL W/E.	0	0	0	0	8	0	0	0	0	0	0	0	0	8
74	W94030	TRAILER AMMUNITION+ 1-1/2 TON 2 WHEEL W/E.	0	0	0	0	0	0	6	0	0	0	0	0	0	6
75	W94441	TRAILER BASIC UTILITY+ 2-1/2 TON 2 SINGLE WHEELS W/E.	0	0	9	0	0	0	0	0	0	0	0	0	0	9
76	W95400	TRAILER CARGO+ 1/4 TON 2 WHEEL W/E.	12	7	24	38	44	59	37	13	39	17	29	261	30	568

Table 1-27. Summary of Equipment—Type of Airborne Division—Continued

1 LIN	2 Nomenclature	3 HHC (57-4G)	4 Cbt avn bn (1-55G)	5 Engr bn (5-25G)	6 Div arty (6-200G)	7 DISCOM (29-51G)	8 Sig bn (11-215G)	9 Armd cav sqdn (17-75G)	10 8 bde HHC (57-42G) (1)	11 8 bde HHC (57-42G) (3)	12 MP co (19-67G)	13 9 abn inf bn (7-35G) (1)	14 9 abn inf bn (7-35G) (9)	15 ADA bn (44-425T)	16 Div total (57G)
77 W95537	TRAILER CARGO+ 3/4 TON 2 WHEEL W/E.	12	26	24	93	95	26	30	10	30	2	14	126	41	505
78 W95811	TRAILER CARGO+ 1-1/2 TON 2 WHEEL W/E.	0	2	5	16	18	2	0	0	0	0	4	36	0	79
79 W98825	TRAILER TANK+ WATER 400 GALLON 1-1/2 TON 2 WHEEL W/E.	1	2	4	13	11	2	4	1	3	0	4	36	3	79
80 X38639	TRUCK AMBULANCE+ 1/4 TON 4×4 W/E.	2	1	1	4	36	0	6	0	0	0	6	54	4	108
81 X38776	TRUCK AMBULANCE+ 3/4 TON 4×4 W/E.	0	0	0	0	0	0	0	0	0	0	0	0	1	1
82 X39735	TRUCK CARGO+ 3/4 TON 4×4 W/E.	13	21	0	68	95	60	28	8	24	2	13	117	56	484
83 X39872	TRUCK CARGO+ 3/4 TON 4×4 W/WINCH W/E.	0	8	52	93	16	0	8	2	6	0	1	9	0	192
84 X39940	TRUCK CARGO+ 1-1/4 TON 6×6 W/E.	0	0	0	0	0	0	0	0	0	0	0	0	12	12
85 X40009	TRUCK CARGO+ 2-1/2 TON 6×6 W/E.	1	3	1	16	35	2	2	1	3	0	6	54	5	122
86 X40146	TRUCK CARGO+ 2-1/2 TON 6×6 W/WINCH W/E.	0	12	6	17	2	2	13	0	0	0	2	18	0	70
87 X40283	TRUCK CARGO+ 2-1/2 TON 6×6 XLWB W/E.	0	0	0	0	1	0	0	0	0	0	0	0	0	1
88 X43434	TRUCK DUMP+ 2-1/2 TON 6×6 W/WINCH W/E.	0	0	27	0	0	0	0	0	0	0	0	0	0	27
89 X55627	TRUCK PLATFORM UTILITY+ 1/2 TON 4×4 W/E.	0	0	28	24	3	3	0	4	12	0	41	369	4	443
90 X57271	TRUCK TANK+ FUEL SERVICING 2-1/2 TON 6×6 W/E.	0	0	0	0	0	0	2	0	0	0	0	0	0	2
91 X59326	TRUCK TRACTOR+ 5 TON 6×6 W/E.	0	0	0	0	18	0	0	0	0	0	0	0	0	18
92 X60833	TRUCK UTILITY+ 1/4 TON 4×4 W/E.	18	9	28	143	58	58	81	16	48	30	35	315	30	818
93 X61244	TRUCK UTILITY+ 1/4 TON 4×4 CARRIER	0	0	0	0	0	0	12	0	0	0	0	0	0	12

		FOR 106MM RIFLE W/E.															
94	X62340	TRUCK VAN+ SHOP 2-1/2 TON 6×6 W/E.	0	0	0	0	2	0	0	0	0	0	0	0	0	2
95	X63025	TRUCK WRECKER+ CRANE 2-1/2 TON 6×6 W/WINCH W/E.	0	0	0	3	2	0	1	0	0	0	0	0	0	6
96	X63094	TRUCK WRECKER+ 3/4 TON 4×4 W/E.	0	0	0	0	5	0	0	0	0	0	0	0	0	5
97	X63162	TRUCK WRECKER+ 2-1/2 TON 6×6 W/ WINCH W/E.	0	0	1	0	0	1	0	0	0	0	0	0	3	5
		CLASS 7L—MISSILES														
98	A90734	ARMAMENT SUBSYSTEM HELICOPTER (SS-11).	0	0	0	0	0	0	4	0	0	0	0	0	0	4
		CLASS 7M—WEAPONS														
99	A90117	ARMAMENT SUBSYSTEM HELICOPTER 7.62 MILLIMETER MACHINE GUN+ LIGHT.	0	25	0	0	2	0	6	0	0	0	0	0	0	33
100	A90154	ARMAMENT SUBSYS HEL 7.62 MG HIGH RATE (XM-27).	0	0	0	0	0	0	9	0	0	0	0	0	0	9
101	A90426	ARMAMENT SUBSYS HEL 7.62MM MG 2.75 IN RKT LAUNCHER+ HIGH RATE.	0	6	0	0	0	0	7	0	0	0	0	0	0	13
102	A90460	ARMAMENT SUBSYSTEM HELICOPTER 40 MILLIMETER GRENADE LAUNCHER+.	0	6	0	0	0	0	7	0	0	0	0	0	0	13
103	G02204	DETECTING SET MINE+ PTBL METALLIC AND NONMETALLIC.	0	0	32	4	0	0	0	0	0	3	0	0	3	42
104	G02341	DETECTING SET MINE+ PTBL METALLIC.	0	0	32	13	2	2	0	0	0	3	3	27	3	82
105	G02478	DETECTING SET MINE TRUCK MOUNTED.	0	0	1	0	0	0	0	0	0	0	0	0	0	1
106	J96845	GUN ANTIAIRCRAFT ARTILLERY TOWED+ 20MM.	0	0	0	0	0	0	0	0	0	0	0	0	24	24
107	K57529	HOWITZER TOWED+ 105 MILLIMETER.	0	0	0	54	0	0	0	0	0	0	0	0	0	54
108	L44575	LAUNCHER GRENADE+ 40 MILLIMETER.	0	0	557	60	14	15	59	3	9	13	85	765	16	1508

Table 1-27. Summary of Equipment—Type of Airborne Division—Continued

1 LIN	2 Nomenclature	3 HHC (57-4G)	4 Cbt avn bn (1-55G)	5 Engr bn (5-25G)	6 Div arty (6-200G)	7 DISCOM (29-51G)	8 Sig bn (11-215G)	9 Armd cav sqdn (17-75G)	10 3 bde HHC (57-42G) (1)	11 (3)	12 MP co (19-67G)	13 9 abn inf bn (7-35G) (1)	14 (9)	15 ADA bn (44-425T)	16 Div total (57G)
109 L91975	MACHINE GUN CALIBER .50+ HB FLEXIBLE FOR GROUND USE.	0	0	0	0	8	0	11	0	0	0	7	63	0	82
110 L92386	MACHINE GUN 7.62 MILLIMETER+ LIGHT FLEXIBLE.	0	0	17	69	38	2	42	0	0	8	24	216	10	402
111 M68008	MORTAR 81 MILLIMETER+ ON MOUNT.	0	0	0	0	0	6	0	0	0	0	9	81	0	87
112 M68282	MORTAR 4.2 INCH+ ON MOUNT.	0	0	0	0	0	0	0	0	0	0	4	36	0	36
113 M75577	MOUNT TRIPOD MACHINE GUN+ HEAVY CALIBER 50.	0	0	0	0	8	0	11	0	0	0	7	63	0	82
114 M75714	MOUNT TRIPOD MACHINE GUN+ 7.62 MILLIMETER.	0	0	17	69	38	2	42	0	0	8	24	216	10	402
115 N96741	PISTOL CALIBER .45 AUTOMATIC+.	28	0	98	142	66	23	115	23	69	140	248	2232	16	2929
116 R91107	REVOLVER CALIBER .38+ 2 INCH BARREL.	0	0	0	0	0	0	0	0	0	2	0	0	0	2
117 R91244	REVOLVER CALIBER .38+ 4 INCH BARREL.	0	148	0	16	11	0	78	4	12	0	0	0	0	265
118 R94977	RIFLE 5.56 MILLIMETER+ W/E.	114	205	479	1470	1964	526	439	91	273	114	561	5049	335	10968
119 R96758	RIFLE RECOILLESS 106 MILLIMETER+ ON MOUNT.	0	0	0	0	0	0	12	0	0	0	12	108	0	120
	CLASS 7N—SPECIAL WEAPONS														
120 H68063	FLAME THROWER PORTABLE+	0	0	0	0	0	0	0	0	0	00	6	54	0	54
	CLASS 7Q—GENERAL EQUIPMENT														
121 B84404	BOAT RECONNAISSANCE+ PNEUMATIC 3 MAN.	0	0	11	0	0	0	0	0	0	0	0	0	0	11
122 H48568	FILTER METER	0	0	0	0	3	0	0	0	0	0	0	0	0	3

		MODULE+ WITH FLOW DIVIDERS AND HOSE ASSEMBLIES.														
123	L85420	LUBRICAT-SERV UNIT PWR OPER+ TRLR MTD 15CF AIR COMP GAS DRVN WZD.	0	0	1	0	0	0	0	0	0	0	0	0	0	1
124	T10138	SHOP EQUIP CONTACT MAINT TRK MTD+.	0	0	1	0	4	0	0	0	0	0	0	0	0	5
125	T13152	SHOP EQUIP ORGANZL REP LIGHT TRK MTD.	0	0	1	0	0	0	0	0	0	0	0	0	0	1
126	V12141	TANK AND PUMP UNIT LIQUID DISPENSING TRUCKMOUNTING+.	0	10	2	0	1	1	0	0	0	0	0	0	0	14
127	V19950	TANK UNIT LIQUID DISPENSING TRAILER MOUNTING+.	0	0	0	0	0	1	0	0	0	0	0	0	0	1

Table 1-28. Summary of Equipment—Airborne Division Artillery

1	2	3	4	5	6
LIN	Nomenclature	HHB (6-201G)	3 FA bn 105-mm, towed (6-215G)		Div arty total (6-200G)
			(1)	(3)	
	CLASS 2A—AIR				
1 X23227	TRANSPORTER AIRMOBILE+HYD LIFT FOR SHELTER AND X-4 CONTAINER.	1	0	0	1
	CLASS 7A—AIR				
2 K30645	HELICOPTER OBSERVATION+OH-6A	9	0	0	9
3 K31749	HELICOPTER UTILITY+UH-1B	2	0	0	2
	CLASS 7B—GROUND SUPPORT				
4 E69242	COMP RCP PWR DRVN+AIR REC GAS DRVN 15 CFM 175 PSI.	0	1	3	3
5 E70064	COMP RCP PWR DRVN+TRK 2 WHL PNEU TIRES GAS DRVN 5 CFM 175 PSI.	1	4	12	13
6 J42959	GEN ST GAS ENG+0.5KW 60CY 1PH AC 120V SHK	0	1	3	3
7 J43233	GEN ST GAS ENG+0.5KW 2 WIRE DC 28V SHK	1	5	15	16
8 J43918	GEN ST GAS ENG+1.5KW 60CY 1PH 2 WIRE AC 120V SHOCK	3	5	15	18
9 J44055	GEN ST GAS ENG+1.5KW DC 28V SHOCK	3	4	12	15
10 J45699	GEN ST GAS ENG+3KW 60CY 1-3PH 120/240V 120/208V SKID SHOCK.	1	1	3	4
11 P96640	PUMPING ASSEMBLY FLAMMABLE LIQUID BULK TRANSFER+.	3	1	3	6
	CLASS 7G—ELECTRONICS				
12 Q15414	RADAR SET+AN/MPQ-4 LESS POWER	0	1	3	3
13 Q17332	RADAR SET+AN/TPS-25 LESS POWER	1	0	0	1
14 Q32756	RADIO SET+AN/GRC-106	2	0	0	2
15 Q33474	RADIO SET+AN/GRC-125	2	20	60	62
16 Q42092	RADIO SET+AN/URC-10	11	0	0	11
17 Q53001	RADIO SET+AN/VRC-46	10	20	60	70
18 Q54154	RADIO SET+AN/VRC-47	0	6	18	18
19 Q55114	RADIO SET+AN/VRC-49	1	1	3	4
20 U81707	SWITCHBOARD TELEPHONE MANUAL+SB-22/PT	1	6	18	19
21 U82255	SWITCHBOARD TELEPHONE MANUAL+SB-86/P	2	0	0	2
22 U82529	SWITCHBOARD TELEPHONE MANUAL+SB-993/GT	0	6	18	18
23 V30937	TELEPHONE SET+TA-264/PT	2	1	3	5
24 V31211	TELEPHONE SET+TA-312/PT	44	122	366	410
	CLASS 7K—TACTICAL VEHICLES				
25 W95400	TRAILER CARGO+1/4 TON 2 WHEEL W/E	11	9	27	38
26 W95537	TRAILER CARGO+3/4 TON 2 WHEEL W/E	21	24	72	93
27 W95811	TRAILER CARGO+1-1/2 TON 2 WHEEL W/E	1	5	15	16
28 W98825	TRAILER TANK+WATER 400 GALLON 1-1/2 TON 2 WHEEL W/E.	1	4	12	13
29 X38639	TRUCK AMBULANCE+1/4 TON 4×4 W/E	1	1	3	4
30 X39735	TRUCK CARGO+3/4 TON 4×4 W/E	17	17	51	68
31 X39872	TRUCK CARGO+3/4 TON 4×4 W/WINCH W/E	6	29	87	93
32 X40009	TRUCK CARGO+2-1/2 TON 6×6 W/E	1	5	15	16
33 X40146	TRUCK CARGO+2-1/2 TON 6×6 W/WINCH W/E	2	5	15	17
34 X55627	TRUCK PLATFORM UTILITY+1/2 TON 4×4 W/E	0	8	24	24
35 X60833	TRUCK UTILITY+1/4 TON 4×4 W/E	23	40	120	143
36 X63025	TRUCK WRECKER+CRANE 2-1/2 TON 6×6 W/WINCH W/E.	0	1	3	3

Table 1-28. Summary of Equipment—Airborne Division Artillery—Continued

1	2	3	4	5	6
LIN	Nomenclature	HHB (6-201G)	3 FA bn 105-mm, towed (6-215G)		Div arty total (6-200G)
			(1)	(3)	
	CLASS 7M—WEAPONS				
37 G02204	DETECTING SET MINE+PTBL METALLIC AND NON METALLIC.	1	1	3	4
38 G02341	DETECTING SET MINE+PTBL METALLIC	1	4	12	13
39 K57529	HOWITZER TOWED+105 MILLIMETER	0	18	54	54
40 L44575	LAUNCHER GRENADE+40 MILLIMETER	6	18	54	60
41 L92386	MACHINE GUN 7.62 MILLIMETER+LIGHT FLEXIBLE	9	20	60	69
42 M75714	MOUNT TRIPOD MACHINE GUN+7.62 MILLIMTER	9	20	60	69
43 N96741	PISTOL CALIBER .45 AUTOMATIC+	22	40	120	142
44 R91244	REVOLVER CALIBER .38+4 INCH BARREL	16	0	0	16
45 R94977	RIFLE 5.56 MILLIMETER+W/E	165	435	1305	1470

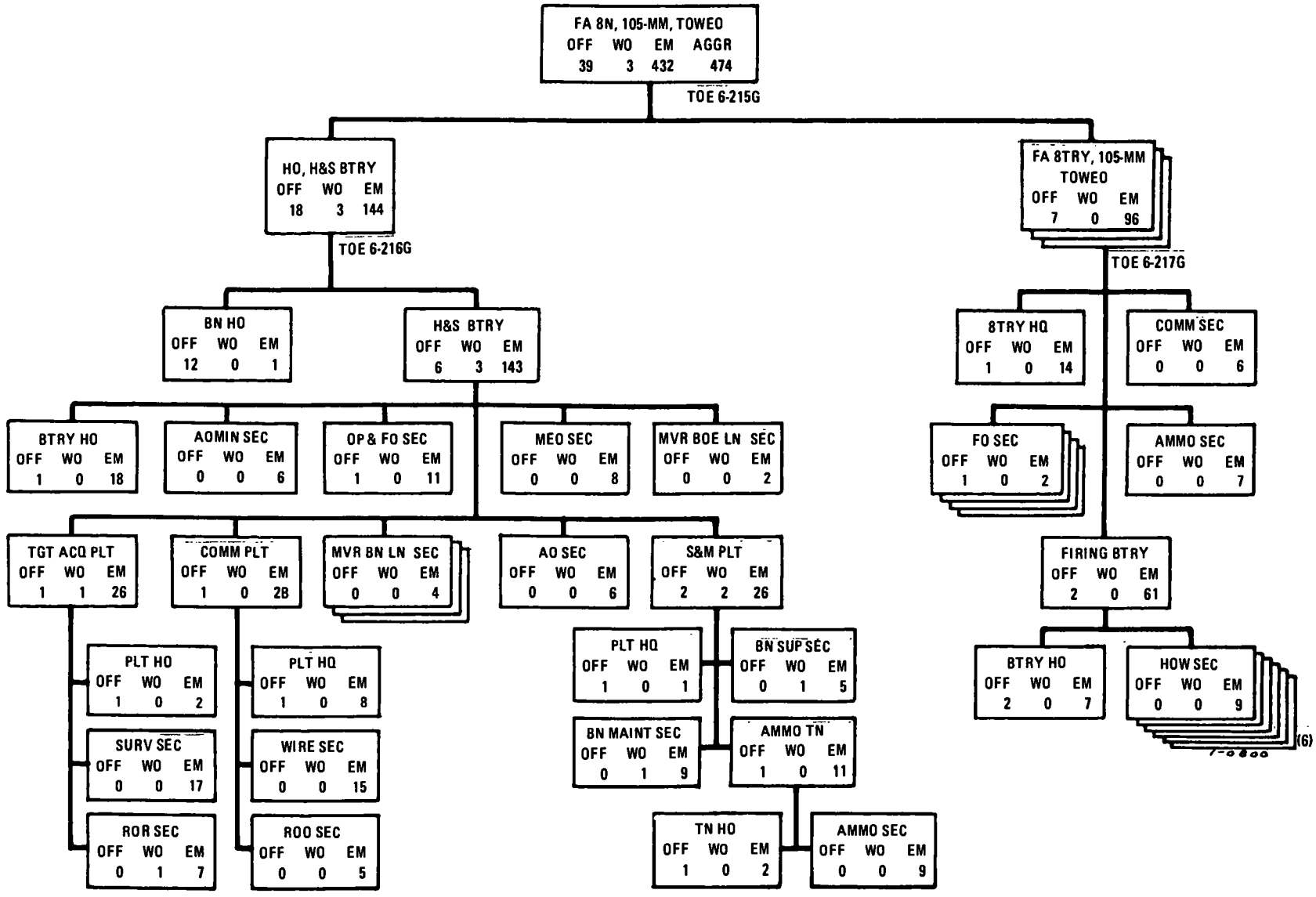

Figure 1–38. Field artillery battalion, 105–mm, towed, airborne division.

TOE 6-215G FA BN, 105-MM, TOWED

1. MISSION

To provide direct or general artillery support, including its component of the artillery weapon systems, to include target acquisition, communications, liaison, survey, ground transportation, and logistics; and to reinforce fires of other field artillery units.

2. ASSIGNMENT

Organic to airborne division artillery, TOE 6-200G.

3. CAPABILITIES

a. Provides direct or general artillery support to an airborne brigade, as required.

b. Provides target acquisition and artillery survey.

c. Provides communications.

d. Provides fire control and supervision.

e. Lands by parachute and aircraft.

f. Is capable of cross-country mobility.

g. Depends on the division administration company, TOE 12-157G, for personnel administrative support.

4. MOBILITY

a. Seventy-five-percent mobile in organic transportation.

b. One hundred-percent air transportable in medium transport aircraft.

TOE 6-216G HQ, H&S BTRY, FA BN, 105-MM, TOWED

1. MISSION

a. To direct and coordinate operations of the battalion and to provide facilities with which the battalion commander controls the battalion.

b. To procure, break down, and distribute all classes of supplies to units of the battalion, to maintain appropriate supply records, and to perform motor maintenance functions not otherwise accomplished within the battalion.

2. ASSIGNMENT

Organic to field artillery battalion, 105-mm, towed, airborne division, TOE 6-215G.

3. CAPABILITIES

a. Provides staff planning, coordination, and control of operations of organic and attached units of the battalion.

b. Provides its portion of the battalion target acquisition, communication, and survey systems.

c. Lands by parachute and aircraft.

d. Provides unit-level medical care and intrabattalion evacuation for the battalion and attached units.

e. Draws and issues all classes of supplies.

f. Furnishes battalion-level organizational motor maintenance.

g. Transports its portion of the basic load of ammunition for the battalion.

h. Can provide liaison sections to support one airborne brigade with three maneuver battalions.

4. MOBILITY

a. Seventy-five-percent mobile in organic transportation.

b. One hundred-percent air transportable in medium transport aircraft.

TOE 6-217G FA BTRY, 105-MM, TOWED, FA BN, 105-MM, TOWED

1. MISSION

To provide a firing component of the 105-mm battalion, towed, and to furnish its portion of the battalion communication and target acquisition systems.

2. ASSIGNMENT

Organic to field artillery battalion, 105-mm, towed, airborne division, TOE 6-215G.

3. CAPABILITIES

a. Furnishes its portion of the battalion artillery fire support and communication and target acquisition systems.

b. Lands by parachute and aircraft.

c. Can provide forward observer sections to support one airborne maneuver battalion.

d. Depends on battalion H&S battery to provide all survey.

4. MOBILITY

a. Seventy-five-percent mobile in organic transportation.

b. One hundred-percent air transportable in medium transport aircraft.

Figure 1–38—Continued

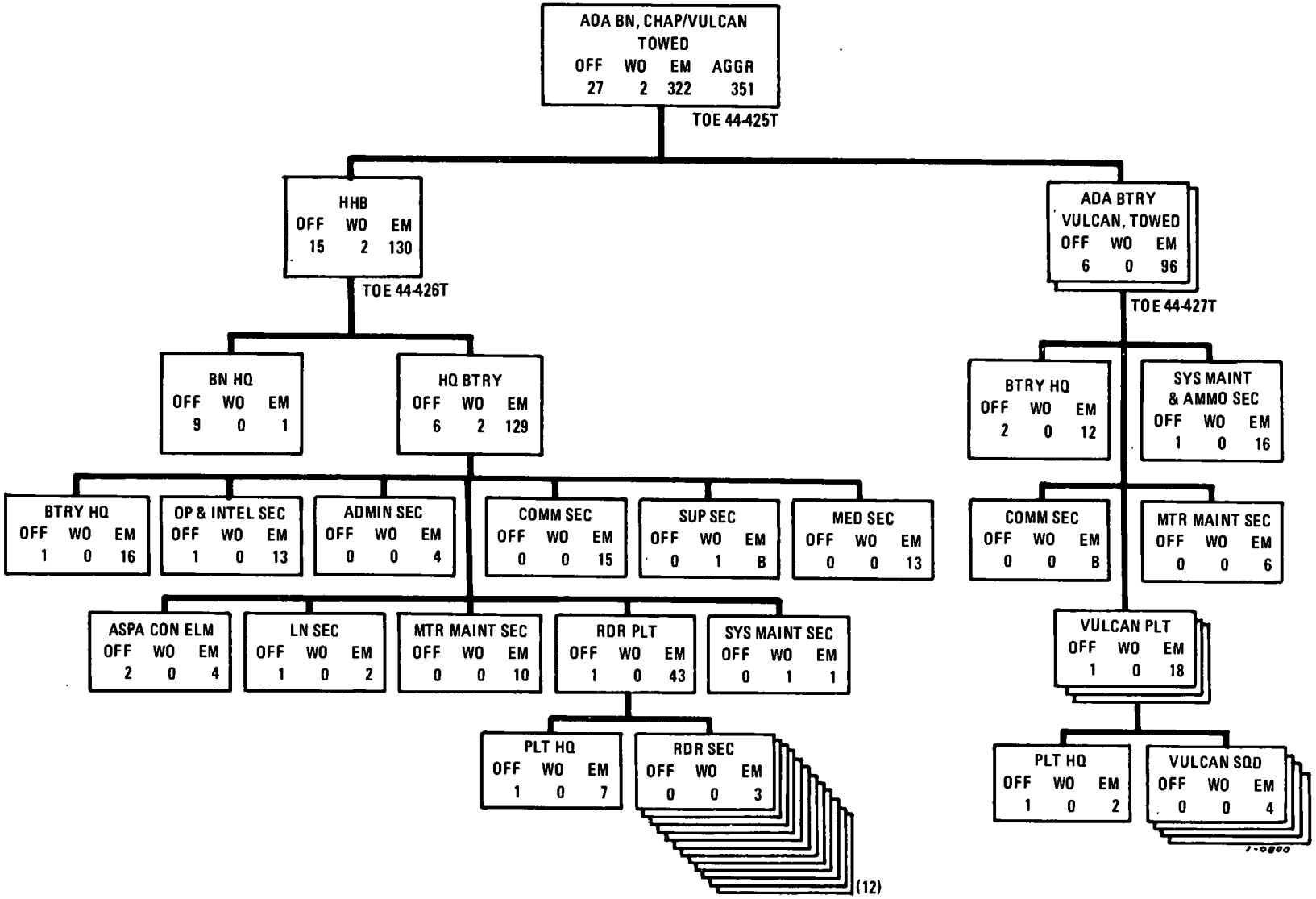

Figure 1–39. Air defense artillery battalion, Chaparral/Vulcan, towed, airborne division.

TOE 44-425T ADA BN, CHAP/VULCAN, TOWED

1. MISSION

To provide air defense for the airborne division, as required, against attack by low-altitude hostile aircraft and to attack and destroy hostile surface targets, as required.

2. ASSIGNMENT

Organic to airborne division, TOE 57G.

3. CAPABILITIES

a. Provides air defense against low-altitude hostile aircraft.

b. Attacks, or defends against, surface targets.

c. Provides a forward area alerting radar facility.

d. Provides medical service, to include emergency medical treatment, operation of the battalion aid station, evacuation of casualties, provision of aidmen to firing batteries, and supervision of sanitation.

e. Lands by parachute and aircraft.

f. Possesses cross-country mobility.

g. Depends on the division administration company, TOE 12-157G, for personnel administrative support.

4. MOBILITY

a. One hundred-percent mobile in organic transportation.

b. One hundred-percent air transportable in medium transport aircraft.

TOE 44-426T HHB, ADA BN, CHAP/VULCAN, TOWED

1. MISSION

To provide command and operational control for the battalion.

2. ASSIGNMENT

Organic to air defense artillery battalion, Chaparral/Vulcan, towed, TOE 44-425T.

3. CAPABILITIES

a. Commands, controls, and provides staff planning and supervision of operations.

b. Provides radio and wire communications with all elements of the battalion and with higher, adjacent, and subordinate units. Wire may go through the nearest division signal center.

c. Provides forward area alerting radar facilities.

d. Provides logistic support to the units of the battalion and organizational maintenance for all battery equipment, except for RATT, cryptographic, and electronic test equipment.

e. Provides medical service, to include emergency medical treatment, operation of the battalion aid station, evacuation of casualties, provision of aidmen to firing batteries, and supervision of sanitation.

f. Provides liaison with the division tactical operations center and the air defense artillery group or air defense artillery battalion, Hawk.

4. MOBILITY

a. One hundred-percent mobile in organic transportation.

b. One hundred-percent air transportable in medium transport aircraft.

TOE 44-427T ADA BTRY, VULCAN, TOWED, ADA BN, CHAP/VULCAN, TOWED

1. MISSION

a. To provide air defense against low-altitude hostile aircraft for the airborne division.

b. To attack and destroy hostile surface targets, as required.

c. To provide the Vulcan fire units to the air defense artillery battalion, Chaparral/Vulcan, towed, airborne division.

2. ASSIGNMENT

Organic to air defense artillery battalion, Chaparral/Vulcan, towed, TOE 44-425T.

3. CAPABILITIES

a. Delivers a high rate of fire from prepared or hasty positions against low-altitude hostile aircraft and surface targets.

b. Receives early warning and aircraft identification data from forward area alerting radars.

c. Performs organizational maintenance for the Vulcan fire unit, communications, and wheeled vehicles.

d. Lands by parachute and aircraft.

4. MOBILITY

Eighty-percent mobile in organic vehicles.

Figure 1–39—Continued

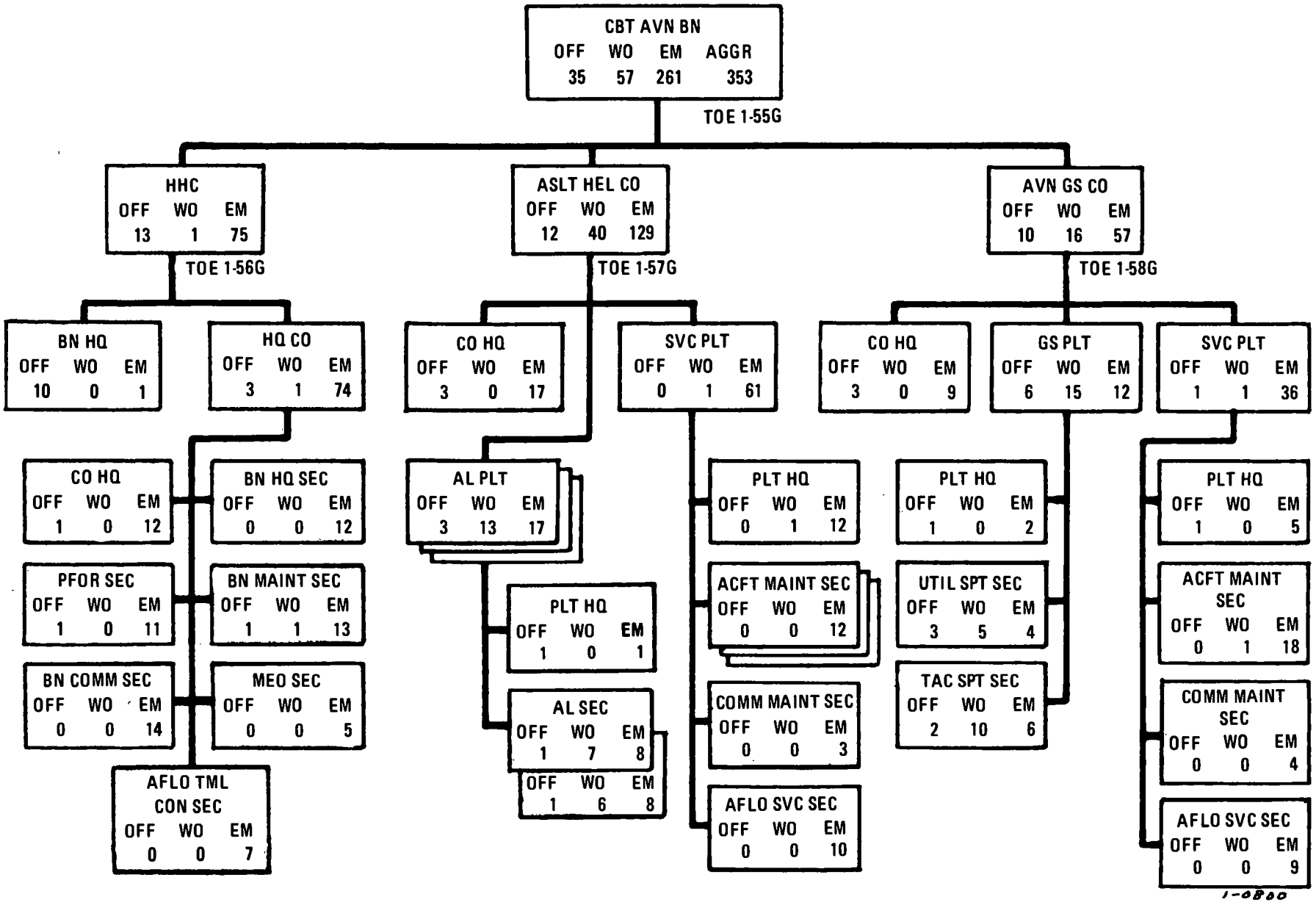

Figure 1–40. Combat aviation battalion, airborne division.

TOE 1-55G CBT AVN BN

1. MISSION

To provide aviation support for division HQ, DISCOM, and other divisional units without organic aircraft. In addition, to provide–

a. General support and reinforcement to units possessing organic aircraft.

b. An aviation special staff section for division HQ.

2. ASSIGNMENT

Organic to airborne division, TOE 57G.

3. CAPABILITIES

a. Commands, controls, performs staff planning, and furnishes communications and supervision of operations for companies of the battalion and attached units.

b. Provides limited aviation special staff personnel for division HQ.

c. Provides air messenger service, aerial radio relay, and field wire-laying service by aircraft, as required by division HQ.

d. Participates in airmobile combat operations. One airborne rifle company can be airlifted in one airlift, using organic aircraft.

e. Operates one instrumented airfield with terminal flight facilities, to include ground controlled approach.

f. Provides aircraft to support division HQ, DISCOM, and other units without organic aircraft.

g. Augments aeromedical evacuation.

h. Reconnoiters and marks drop or landing sites to insure accurate delivery of personnel and materiel by paradrop or landing operations.

i. Assists in navigation and control of Army aircraft in the objective area.

j. Depends on the division administration company, TOE 12-157G, for personnel administration.

4. MOBILITY

a. Ground mobility of units organic to this battalion is included in appropriate component TOE extracts.

b. One hundred-percent air transportable in medium transport aircraft.

TOE 1-56G HHC, CBT AVN BN

1. MISSION

To furnish command, control, administration, battalion-level organizational maintenance, communications, and supply for the aviation battalion.

2. ASSIGNMENT

Organic to combat aviation battalion, airborne division, TOE 1-55G.

3. CAPABILITIES

a. Commands, controls, performs staff planning, and furnishes communications and supervision of operations for companies of the battalion and attached units.

b. Provides aviation special staff personnel for division HQ.

c. Provides personnel to supervise battalion supply, organizational maintenance, and administration for organic and attached units.

d. Provides mess facilities for the aviation general support company.

e. Provides unit-level medical service to the division base airfield and elements of the aviation battalion.

f. Reconnoiters and marks drop or landing sites to insure accurate delivery of personnel and materiel by paradrop or landing operations.

g. Assists in navigation and control of Army aircraft in the objective area.

h. Operates one instrumented airfield with terminal flight facilities, to include ground controlled approach.

i. Depends on the division administration company, TOE 12-157G, for personnel administration.

4. MOBILITY

a. Sixty-percent mobile in organic surface transportation.

b. One hundred-percent air transportable in medium transport aircraft.

Figure 1–40—Continued

TOE 1-57G ASLT HEL CO, CBT AVN BN

1. MISSION

To provide tactical air movement of combat troops, supplies, and equipment in airmobile operations.

2. ASSIGNMENT

Organic to combat aviation battalion, airborne division, TOE 1-55G.

3. CAPABILITIES

a. Provides continuous (day and night) operations during visual weather conditions and limited operations under instrument weather conditions in support of the division in the forward areas of the combat zone.

b. Provides, in a single lift, airlift for one airborne rifle company.

c. Provides air movement of troops, supplies, and equipment within the division area.

d. Augments the aeromedical evacuation capability of medical air ambulance elements.

e. Provides company-level organizational maintenance for organic equipment.

f. Depends on the division administration company, TOE 12-157G, for personnel administration.

4. MOBILITY

a. Fifty-percent mobile in organic surface transportation.

b. One hundred-percent air transportable in medium transport aircraft.

TOE 1-58G AVN GS CO, CBT AVN BN

1. MISSION

To provide aviation support for division HQ, DISCOM, and other units without organic aircraft. In addition, to provide–

a. Limited general support and reinforcement to units with organic aircraft.

b. Limited air escort for airmobile operations and limited supplemental air fire support to combat elements of the division.

2. ASSIGNMENT

Organic to combat aviation battalion, airborne division, TOE 1-55G.

3. CAPABILITIES

a. Provides continuous (day and night) operations during visual weather conditions and limited operations under instrument weather conditions.

b. Provides air observation, reconnaissance, and surveillance (day and night) of enemy areas to locate, verify, and evaluate targets, terrain study, and fire adjustment.

c. Conducts radiological survey.

d. Provides command, control, liaison, reconnaissance, and communications.

e. Augments the aeromedical evacuation capability of medical air ambulance elements and aeromedical evacuation for the aviation battalion.

f. Depends on the division administration company, TOE 12-157G, for personnel administration and on HHC, combat aviation battalion, TOE 1-56G, for mess.

4. MOBILITY

a. Seventy-percent mobile in organic surface transportation.

b. One hundred-percent air transportable in medium transport aircraft.

Figure 1-40—Continued

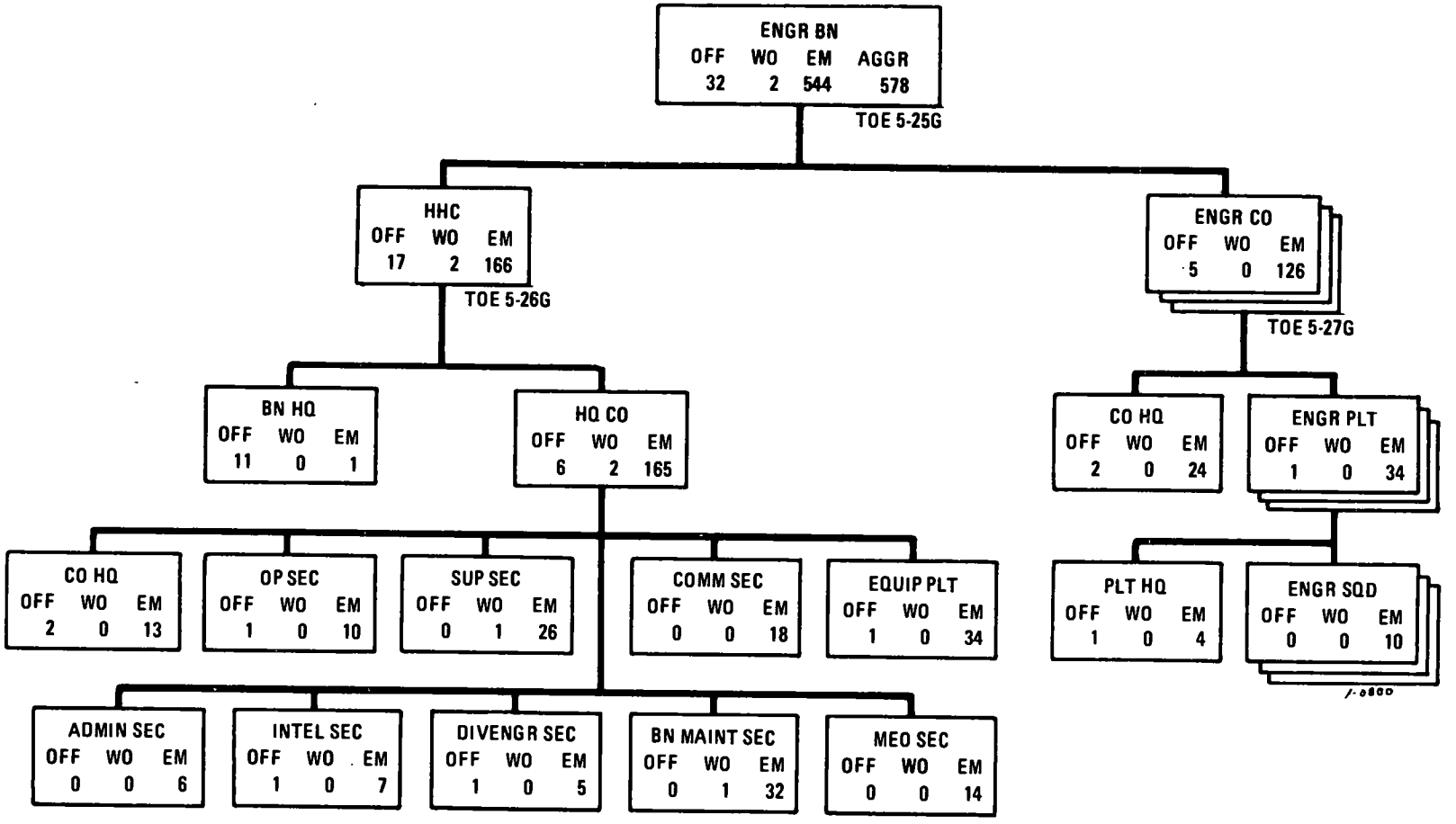

Figure 1–41. Engineer battalion, airborne division.

1. MISSION

To increase the combat effectiveness of the airborne division by providing combat support and to undertake and carry out airborne infantry combat missions, when required.

2. ASSIGNMENT

Organic to airborne division, TOE 57G.

3. CAPABILITIES

a. Provides engineer staff planning and supervision for organic and attached engineer troops.

b. Performs engineer reconnaissance and produces engineer intelligence for the division.

c. Performs limited construction, repair, and maintenance of roads, bridges, fords, and culverts to facilitate the movements of the division.

d. Performs limited general construction works, including construction of assault landing strips.

e. Plans for the employment of ADM. Prepares for firing of ADM, as required, when TOE 5-570G cellular-type ADM teams are attached.

f. Provides personnel and equipment for the purification and supply of potable water.

g. Furnishes close engineer combat support by personnel and equipment landed by parachute and aircraft.

h. Furnishes technical assistance in camouflage operations.

i. Emplaces and removes obstacles, including mines and boobytraps.

j. Constructs and places deceptive devices.

k. Provides organizational maintenance repair service for engineer, ordnance, and signal equipment organic to the battalion.

l. Furnishes technical advice to supported units on engineering matters, including recommendations for employment of engineer troops.

m. Provides assistance in the assault of fortified positions.

n. Provides assistance in the exploitation of locally available materials for construction, fortifications, and camouflage.

o. The limited capability of this unit may be increased, as required for specific operations, by attaching elements of TOE 5-195G, engineer combat battalion, airborne, and/or TOE 5-54G, engineer light equipment company, airborne.

4. MOBILITY

a. Ninety-five-percent mobile in organic transportation.

b. One hundred-percent air transportable in medium transport aircraft.

Figure 1–41—Continued

TOE 5-26G HHC, ENGR BN

1. MISSION

a. HQ. To provide an engineer special staff section for the division and to provide command and staff for the engineer battalion, airborne division.

b. HQ company. To provide alternate CP, administration, operational control, communications, engineer reconnaissance and intelligence, supply, organizational maintenance support, engineer construction and ordnance equipment, and unit-level medical service for the engineer battalion. Also, to provide potable water for the division and additional combat support by planning employment of ADM, when appropriate teams are assigned.

c. To fight as airborne infantry, when required.

2. ASSIGNMENT

Organic to engineer battalion, airborne division, TOE 5-25G.

3. CAPABILITIES

a. Provides staff planning and supervision of division engineer operations, including attached engineer troops.

b. Provides five water points for purification and supply of water for the division.

c. Performs engineer reconnaissance and intelligence for the engineer battalion and the division.

d. When TOE 5-570G cellular-type ADM teams are attached, provides ADM support to the division, as required.

e. Furnishes unit-level medical service for the battalion, to include unit-level medical care and intrabattalion evacuation.

f. Performs organizational maintenance and repair service for equipment of the battalion.

g. Provides radio and wire communications for the battalion, when performing a normal engineer mission and when reorganized for combat as infantry.

h. Provides additional construction equipment for subordinate units.

i. Depends on the division administration company, TOE 12-157G, for personnel administrative services.

4. MOBILITY

a. Ninety-percent mobile in organic transportation.

b. One hundred-percent air transportable in medium transport aircraft.

TOE 5-27G ENGR CO, ENGR BN

1. MISSION

To provide an operating component of the engineer battalion, airborne division, and to undertake and carry out airborne infantry combat missions, when required.

2. ASSIGNMENT

Organic to engineer battalion, airborne division, TOE 5-25G.

3. CAPABILITIES

a. Performs pioneer tasks.

b. When reinforced with engineer equipment, executes more complex engineer work, to include hasty construction of assault aircraft landing facilities.

c. Provides engineer support for combined arms teams of the airborne infantry brigade.

d. Depends on the division administration company, TOE 12-157G, for personnel administrative services.

4. MOBILITY

a. One hundred-percent mobile in organic transportation.

b. One hundred-percent air transportable in medium transport aircraft and airdroppable.

Figure 1-41—Continued

Table 1–29. Summary of Equipment—Field Artillery Battalion, 105-mm, Towed, Airborne Division

1	2	3	4	5	6
LIN	Nomenclature	HQ H&S btry (6–216G)	3 FA btry 105-mm, towed (6–217G)		Bn total (6–215G)
			(1)	(3)	
	CLASS 7B—GROUND SUPPORT				
1 E69242	COMP RCP PWR DRVY+AIR REC GAS DRVN 15 CFM 175 PSI.	1	0	0	1
2 E70064	COMP RCP PWR DRVN+TRK 2 WHL PNEU TIRES GAS DRVN 5 CFM 175 PSI.	1	1	3	4
3 J42959	GEN ST GAS ENG+0.5KW 60CY 1PH AC 120V SHK	1	0	0	1
4 J43233	GEN ST GAS ENG+0.5KW 2 WIRE DC 28V SHK	5	0	0	5
5 J43918	GEN ST GAS ENG+1.5KW 60CY 1PH 2 WIRE AC 120V SHOCK	2	1	3	5
6 J44055	GEN ST GAS ENG+1.5KW DC 28V SHOCK	1	1	3	4
7 J45699	GEN ST GAS ENG+3KW 60CY 1–3PH 120/240V 120/208V SKID SHOCK.	1	0	0	1
8 P96640	PUMPING ASSEMBLY FLAMMABLE LIQUID BULK TRANSFER+.	1	0	0	1
	CLASS 7G—ELECTRONICS				
9 Q15414	RADAR SET+AN/MPQ–4 LESS POWER	1	0	0	1
10 Q33474	RADIO SET+AN/GRC–125	8	4	12	20
11 Q53001	RADIO SET+AN/VRC–46	8	4	12	20
12 Q54154	RADIO SET+AN/VRC–47	6	0	0	6
13 Q55114	RADIO SET+AN/VRC–49	1	0	0	1
14 U81707	SWITCHBOARD TELEPHONE MANUAL+SB–22/PT	3	1	3	6
15 U82529	SWITCHBOARD TELEPHONE MANUAL+SB–993/GT	3	1	3	6
16 V30937	TELEPHONE SET+TA–264/PT	1	0	0	1
17 V31211	TELEPHONE SET+TA–312/PT	44	26	78	122
	CLASS 7K—TACTICAL VEHICLES				
18 W95400	TRAILER CARGO+1/4 TON 2 WHEEL W/E	9	0	0	9
19 W95537	TRAILER CARGO+3/4 TON 2 WHEEL W/E	9	5	15	24
20 W95811	TRAILER CARGO+1-1/2 TON 2 WHEEL W/E	5	0	0	5
21 W98825	TRAILER TANK+WATER 400 GALLON 1-1/2 TON 2 WHEEL W/E.	1	1	3	4
22 X38639	TRUCK AMBULANCE+1/4 TON 4×4 W/E	1	0	0	1
23 X39735	TRUCK CARGO+3/4 TON 4×4 W/E	8	3	9	17
24 X39872	TRUCK CARGO+3/4 TON 4×4 W/WINCH W/E	5	8	24	29
25 X40009	TRUCK CARGO+2-1/2 TON 6×6 W/E	2	1	3	5
26 X40146	TRUCK CARGO+2-1/2 TON 6×6 W/WINCH W/E	5	0	0	5
27 X55627	TRUCK PLATFORM UTILITY+1/2 TON 4×4 W/E	2	2	6	8
28 X60833	TRUCK UTILITY+1/4 TON 4×4 W/E	22	6	18	40
29 X63025	TRUCK WRECKER+CRANE 2-1/2 TON 6×6 W/WINCH W/E	1	0	0	1
	CLASS 7M—WEAPONS				
30 G02204	DETECTING SET MINE+PTBL METALLIC AND NONMETALLIC.	1	0	0	1
31 G02341	DETECTING SET MINE+PTBL METALLIC	1	1	3	4
32 K57529	HOWITZER TOWED+105 MILLIMETER	0	6	18	18
33 L44575	LAUNCHER GRENADE+40 MILLIMETER	6	4	12	18
34 L92386	MACHINE GUN 7.62 MILLIMETER+LIGHT FLEXIBLE	8	4	12	20
35 M75714	MOUNT TRIPOD MACHINE GUN+7.62 MILLIMETER	8	4	12	20
36 N96741	PISTOL CALIBER .45 AUTOMATIC+	25	5	15	40
37 R94977	RIFLE 5.56 MILLIMETER+W/E	141	98	294	435

Table 1-30. Summary of Equipment—Air Defense Artillery Battalion, Chaparral/Vulcan, Towed, Airborne Division

1	2	3	4	5	6
LIN	Nomenclature	HHB (44-426T)	2 ADA btry Vulcan towed (44-427T) (1)	(2)	Bn total (44-425T)
	CLASS 7B—GROUND SUPPORT				
1 E70064	COMP RCP PWR DRVN+TRK 2 WHL PNEU TIRES GAS DRVN 5 CFM 175 PSI.	1	1	2	3
2 J42856	GEN ST GAS ENG+0.5KW 28V DC SKID-SHOCK	6	0	0	6
3 J43918	GEN ST GAS ENG+1.5KW 60CY 1PH 2 WIRE AC 120V SHOCK	2	1	2	4
4 J44055	GEN ST GAS ENG+1.5KW DC 28V SHOCK	2	2	4	6
5 J46110	GEN ST GAS ENG+3KW DC 28V SKID-SHOCK	4	1	2	6
6 J48713	GEN ST GAS ENG+5KW 400CY 1-3PH AC 120/140 120/208V SKID.	12	0	0	12
	CLASS 7G—ELECTRONICS				
7 Q16046	RADAR SET+AN/MPQ-49 (FAAR)	12	0	0	12
8 Q32756	RADIO SET AN/GRC-106	6	0	0	6
9 Q53001	RADIO SET AN/VRC-46	6	2	4	10
10 Q54154	RADIO SET AN/VRC-47	19	17	34	53
11 Q55114	RADIO SET AN/VRC-49	1	1	2	3
12 Q90100	RADIO TELETYPEWRITER SET+AN/GRC-122 LESS POWER.	1	0	0	1
13 U81707	SWITCHBOARD TELEPHONE MANUAL+SB-22/PT	0	5	10	10
14 U82255	SWITCHBOARD TELEPHONE MANUAL+SB-86/P	1	0	0	1
15 V30252	TELEPHONE SET+TA-1/PT	8	8	16	24
16 V31211	TELEPHONE SET+TA-312/PT	36	22	44	80
	CLASS 7K—TACTICAL VEHICLES				
17 W95400	TRAILER CARGO+1/4 TON 2 WHEEL W/E	14	8	16	30
18 W95537	TRAILER CARGO+3/4 TON 2 WHEEL W/E	25	8	16	41
19 W98825	TRAILER TANK+WATER 400 GALLON 1-1/2 TON 2 WHEEL W/E.	1	1	2	3
20 X38639	TRUCK AMBULANCE+1/4 TON 4×4 W/E	4	0	0	4
21 X38776	TRUCK AMBULANCE+3/4 TON 4×4 W/E	1	0	0	1
22 X39735	TRUCK CARGO+3/4 TON 4×4 W/E	16	20	40	56
23 X39940	TRUCK CARGO+1-1/4 TON 6×6 W/E	12	0	0	12
24 X40009	TRUCK CARGO+2-1/2 TON 6×6 W/E	1	2	4	5
25 X55627	TRUCK PLATFORM UTILITY+1/2 TON 4×4 W/E	0	2	4	4
26 X60833	TRUCK UTILITY+1/4 TON 4×4 W/E	14	8	16	30
27 X63162	TRUCK WRECKER+2-1/2 TON 6×6 W/WINCH W/E	1	1	2	3
	CLASS 7M—WEAPONS				
28 G02204	DETECTING SET MINE+PTBL METALLIC AND NON METALLIC.	1	1	2	3
29 G02341	DETECTING SET MINE+PTBL METALLIC	1	1	2	3
30 J96845	GUN ANTIAIRCRAFT ARTILLERY TOWED+20MM	0	12	24	24
31 L44575	LAUNCHER GRENADE+40 MILLIMETER	4	6	12	16
32 L92386	MACHINE GUN 7.62 MILLIMETER+LIGHT FLEXIBLE	4	3	6	10
33 M75714	MOUNT TRIPOD MACHINE GUN+7.62 MILLIMETER	4	3	6	10
34 R94977	RIFLE 5.56 MILLIMETER+W/E	133	101	202	335

Table 1-81. Summary of Equipment—Combat Aviation Battalion, Airborne Division

1	2	3	4	5	6
LIN	Nomenclature	HHC (1-56G)	Asit hel co (1-57G)	Avn GS co (1-58G)	Bn total (1-55G)
	CLASS 2A—AIR				
1 X23227	TRANSPORTER AIRMOBILE+HYD LIFT FOR SHELTER AND X-4 CONTAINER.	0	1	1	2
	CLASS 7A—AIR				
2 K30645	HELICOPTER OBSERVATION+OH-6A	0	0	4	4
3 K31749	HELICOPTER UTILITY+UH-1B	0	0	6	6
4 K31786	HELICOPTER UTILITY+UH-1D	0	25	2	27
	CLASS 7B—GROUND SUPPORT				
5 E70064	COMP RCP PWR DRVN+TRK 2 WHL PNEU TIRES GAS DRVN 5 CFM 175 PSI.	1	1	0	2
6 J41041	GENERATOR SET GASOLINE ENGINE TRAILER MTD+ PU-253/U.	1	0	0	1
7 J42959	GFN ST GAS ENG+0.5KW 60CY 1PH AC 120V SHK	0	3	1	4
8 J43918	GFN ST GAS ENG+1.5KW 60CY 1PH WIRE AC 120V SHOCK	2	0	0	2
9 J45699	GEN ST GAS ENG+3KW 60CY 1-3PH 120/240V 120/208V SKID SHOCK.	2	0	0	2
10 J47068	GFN ST GAS ENG+5KW 60CY 1-3PH AC 120/240 120/208V SKD-SHK MTD.	1	1	1	3
11 P96640	PUMPING ASSEMBLY FLAMMABLE LIQUID BULK TRANSFER+.	1	6	4	11
	CLASS 7G—ELECTRONICS				
12 Q32756	RADIO SET AN/GRC-106	2	1	1	4
13 Q33474	RADIO SET AN/GRC-125	0	1	1	2
14 Q42092	RADIO SET+AN/URC-10	0	25	12	37
15 Q50421	RADIO SET AN/VRC-24	1	1	0	2
16 Q53001	RADIO SET AN/VRC-46	3	1	0	4
17 Q54154	RADIO SET AN/VRC-47	0	0	1	1
18 Q55114	RADIO SET AN/VRC-49	1	1	0	2
19 U81707	SWITCHBOARD TELEPHONE MANUAL+SB-22/PT	2	1	1	4
20 V30252	TELEPHONE SET+TA-1/PT	1	4	0	5
21 V31211	TELEPHONE SET+TA-312/PT	13	9	7	29
	CLASS 7K—TACTICAL VEHICLES				
22 W95400	TRAILER CARGO+1/4 TON 2 WHEEL W/E	6	1	0	7
23 W95537	TRAILER CARGO+3/4 TON 2 WHEEL W/E	13	6	7	26
24 W95811	TRAILER CARGO+1-1/2 TON 2 WHEEL W/E	1	1	0	2
25 W98825	TRAILER TANK+WATER 400 GALLON 1-1/2 TON 2 WHEEL W/E.	1	1	0	2
26 X38639	TRUCK AMBULANCE+1/4 TON 4×4 W/E	1	0	0	1
27 X39735	TRUCK CARGO+3/4 TON 4×4 W/E	8	6	7	21
28 X39872	TRUCK CARGO+3/4 TON 4×4 W/WINCH W/E	6	1	1	8
29 X40009	TRUCK CARGO+2-1/2 TON 6×6 W/E	2	1	0	3
30 X40146	TRUCK CARGO+2-1/2 TON 6×6 W/WINCH W/E	1	7	4	12
31 X60833	TRUCK UTILITY+1/4 TON 4×4 W/E	6	1	2	9
	CLASS 7M—WEAPONS				
32 A90117	ARMAMENT SUBSYSTEM HELICOPTER 7.62 MILLIMETER MACHINE GUN+LIGHT.	0	25	0	25
33 A90426	ARMAMENT SUBSYS HEL 7.62MM MG 2.75IN RKT LAUNCHER+HIGH RATE.	0	0	6	6

Table 1-31. Summary of Equipment—Combat Aviation Battalion, Airborne Division—Continued

1	2	3	4	5	6
LIN	Nomenclature	HHC (1-56G)	Aslt hel co (1-57G)	Avn GS co (1-58G)	Bn total (1-55G)
34 A90460	ARMAMENT SUBSYSTEM HELICOPTER 40 MILLIMETER GRENADE LAUNCHER+.	0	0	6	6
35 R91244	REVOLVER CALIBER .38+4 INCH BARREL	13	101	34	148
36 R94977	RIFLE 5.56 MILLIMETER+W/E	76	80	49	205
	CLASS 7Q—GENERAL EQUIPMENT				
37 V12141	TANK AND PUMP UNIT LIQUID DISPENSING TRUCK-MOUNTING+.	0	6	4	10

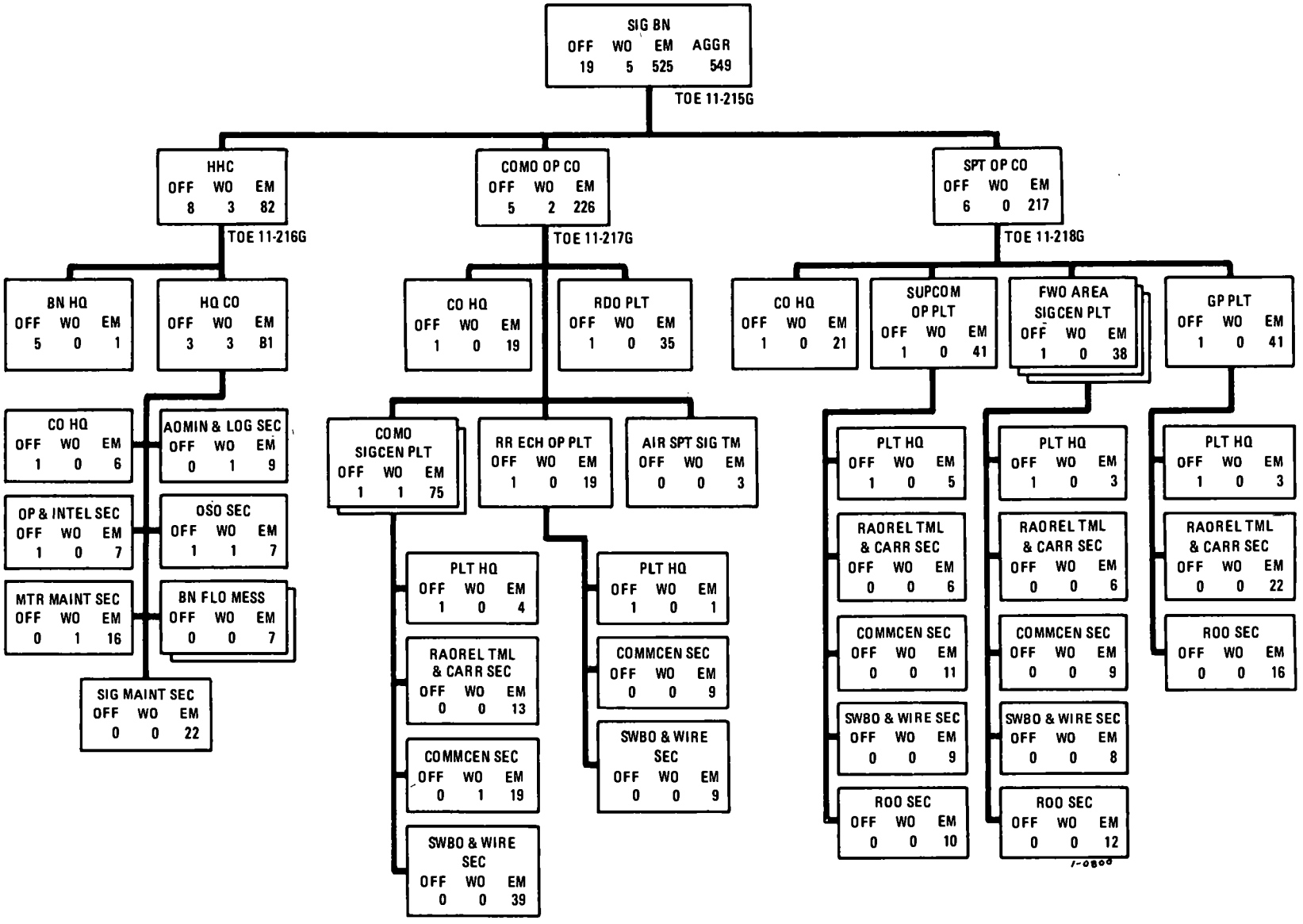

Figure 1–42. Signal battalion, airborne division.

1. MISSION

a. To provide signal communications for the echelons of an airborne division HQ and an airborne DISCOM HQ.

b. To establish and operate the division common signal service system.

c. To provide multichannel communication service to brigade HQ, DISCOM HQ, and other major units operating directly under division HQ.

d. To perform direct support maintenance on cryptographic equipment in the division and organizational maintenance on equipment organic to the battalion.

2. ASSIGNMENT

Organic to airborne division, TOE 57G.

3. CAPABILITIES

a. Plans and supervises communications, training, and other signal activities.

b. Installs, operates, and maintains wire and radio communications for division HQ and DISCOM HQ.

c. Installs, operates, and maintains multichannel communication service to brigades, DISCOM, division artillery, and other major units operating directly under division HQ.

d. Installs, operates, and maintains teletypewriter and telephone switchboard service for division rear.

e. Installs, operates, and maintains a division common signal service system.

f. Performs direct support maintenance on cryptographic equipment of the division.

g. Performs organizational maintenance on equipment organic to the battalion.

h. Lands by parachute or aircraft.

i. Depends on–

(1) Other divisional units for medical, dental, and religious services; maintenance of personnel records; and supplemental motor transportation.

(2) The division aviation battalion or other aviation units for aerial wire-laying operations, division air messenger services, and aerial airborne FM radio relay.

(3) The DISCOM for direct support maintenance of vehicles and signal equipment, other than cryptographic equipment.

(4) Army or other higher echelons for photographic services.

(5) Signal units of higher HQ for RATT, radio-relay terminal equipment for higher or adjacent command radio nets, and external multichannel communication systems.

4. MOBILITY

a. Ground mobility of units organic to this battalion is included in appropriate component TOE extracts.

b. One hundred-percent air transportable in medium transport aircraft.

Figure 1–42—Continued

TOE 11-216G HHC, SIG BN

1. MISSION

a. To direct and coordinate operations and training of the battalion and to provide the HQ facilities with which the battalion commander exercises control.

b. To provide the division a signal officer and his staff and staff facilities.

c. To provide supplemental administrative and logistic support for the battalion.

d. To provide direct support maintenance for cryptographic equipment of the division and organizational maintenance for organic equipment.

2. ASSIGNMENT

Organic to signal battalion, airborne division, TOE 11-215G.

3. CAPABILITIES

a. Plans, commands, controls, and coordinates the training and operations of the signal battalion, airborne division.

b. Provides the signal staff section for division HQ.

c. Provides administrative and logistic support for the signal battalion, airborne division, to include–

(1) Liaison with the administration company, airborne division, TOE 12-157G.

(2) Organizational maintenance for signal equipment and supplemental automotive maintenance for the battalion.

(3) Organizational maintenance for power generator equipment to supplement the capabilities of the operating companies.

(4) Two field messes to provide mess facilities of the HHC and the command operations company on an area basis.

d. Performs limited direct support maintenance on cryptographic equipment of the division.

e. Lands by parachute or aircraft.

4. MOBILITY

a. Eighty-percent mobile in organic transportation.

b. One hundred-percent air transportable in medium transport aircraft.

TOE 11-217G COMD OP CO, SIG BN

1. MISSION

a. To provide signal communications for the echelons of division HQ.

b. To provide signal center service to units located in the vicinity of division HQ that is supplemental to organic facilities.

c. To establish and operate an assigned portion of the division common signal service system.

d. To provide and operate net control and other stations, as required, in division radio nets, including the division warning net.

2. ASSIGNMENT

Organic to signal battalion, airborne division, TOE 11-215G.

3. CAPABILITIES

a. Establishes and operates signal facilities for two echelons of division HQ, to include simultaneous operation on a 24-hour basis of–

(1) Message center, motor messenger, cryptographic, and teletypewriter facilities.

(2) Manual telephone switchboard and local telephone service.

(3) RATT, AM/SSB voice and FM/voice radio net control and other stations in division radio nets, and FM radio-wire-integration stations.

b. Establishes and operates a communication center and telephone switchboard, to include the installation of local telephone service at division rear.

c. Establishes and operates at division main and alternate HQ radio-relay or telephone carrier terminal stations in the division multichannel communication system.

d. Provides and operates patching and switching facilities for wire and radio-relay trunk circuits in the division common signal service system.

e. Provides signal center service to units located in the vicinity of echelons of division HQ signal centers, to include the handling of message traffic and provision of telephone switching service and connecting lines that are supplemental to organic facilities.

f. Provides communication facilities for the division air request radio net at division HQ.

g. Provides organizational automotive and generator maintenance.

h. Lands by parachute or aircraft.

4. MOBILITY

a. Seventy-five-percent mobile in organic transportation.

b. One hundred-percent air transportable in medium transport aircraft.

Figure 1–42—Continued

1. MISSION

a. To provide signal center service to units in the vicinity of brigade HQ and DISCOM that is supplemental to organic capabilities.

b. To install and operate the assigned portion of the division common signal service system.

c. To provide access trunks to the division multichannel communication system for brigade HQ, division artillery, aviation battalion, and DISCOM.

d. To install and operate radio stations in the division and signal battalion radio nets.

2. ASSIGNMENT

Organic to signal battalion, airborne division, TOE 11-215G.

3. CAPABILITIES

a. Installs and operates a radio-wire-integration station and multichannel and RATT terminal service at the CP locations of division artillery and the aviation battalion to connect with the division signal system.

b. Installs and operates three forward signal centers to provide signal communications to units in the division forward area that are supplemental to organic capabilities, to include operation on a 24-hour basis in each signal center of–

(1) Message center, motor messenger, cryptographic, and teletypewriter service.

(2) Manual telephone switchboard service and installation of telephone lines to users, to include connecting brigade HQ into the division communication system.

(3) RATT service in the division nets and a radio-wire-integration station.

c. Installs and operates a signal center to provide communications to DISCOM and units in the vicinity that are supplemental to organic capabilities, to include operation on a 24-hour basis of–

(1) Message center, motor messenger, cryptographic, and teletypewriter service.

(2) Manual telephone switchboard and local telephone system.

(3) RATT stations, radio-wire-integration stations, and an FM radio automatic retransmission station.

d. Establishes and operates at each signal center radio-relay or telephone carrier terminal station in the division multichannel communication system.

e. Provides organizational automotive and generator maintenance.

f. Lands by parachute or aircraft.

4. MOBILITY

a. Ninety-percent mobile in organic transportation.

b. One hundred-percent air transportable in medium transport aircraft.

Figure 1–42—Continued

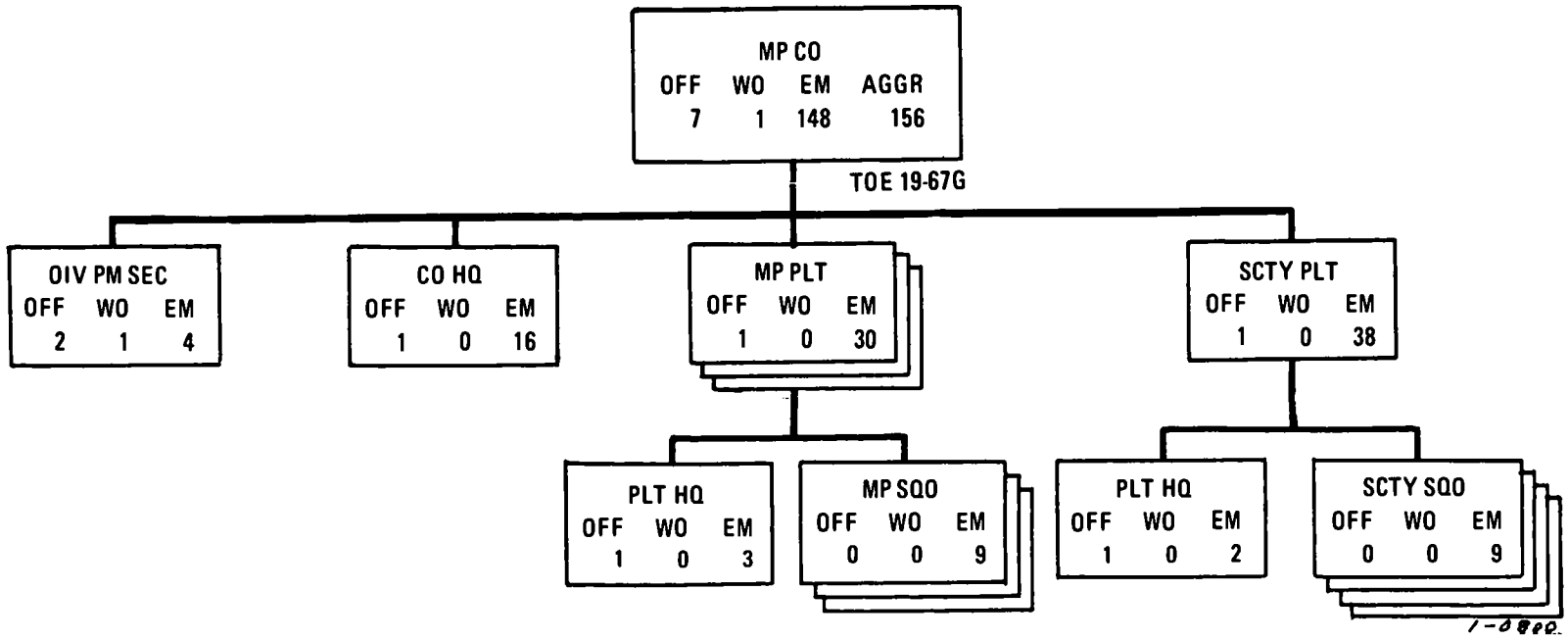

1. MISSION

To provide military police combat support to the airborne division.

2. ASSIGNMENT

Organic to airborne division, TOE 57G.

3. CAPABILITIES

a. Provides a provost marshal section to division HQ.

b. Establishes 18 motor patrols or 27 traffic control posts, or combinations thereof, over a 24-hour period when the three military police platoons are involved in no other duties.

c. Provides security to division forward (main) CP.

d. Operates prisoner of war collecting points at division and on the axis of advance of each of three brigades.

e. Provides security of prisoners of war during evacuation from division forward prisoner of war collecting points to the division central prisoner of war collecting point or army transfer point.

f. Controls the circulation of individuals in conjunction with traffic control operations.

g. Investigates crime within the division area.

h. Provides escort and security of high-priority shipments and movements by motorized traffic patrols.

i. Depends on –

(1) HHC, airborne division, TOE 57-4G, or assigned teams from TOE 29-500G for mess.

(2) The division administration company, TOE 12-157G, for personnel services.

4. MOBILITY

a. Forty-seven-percent mobile in organic transportation.

b. One hundred-percent air transportable in medium transport aircraft.

Figure 1-43. Military police company, airborne division.

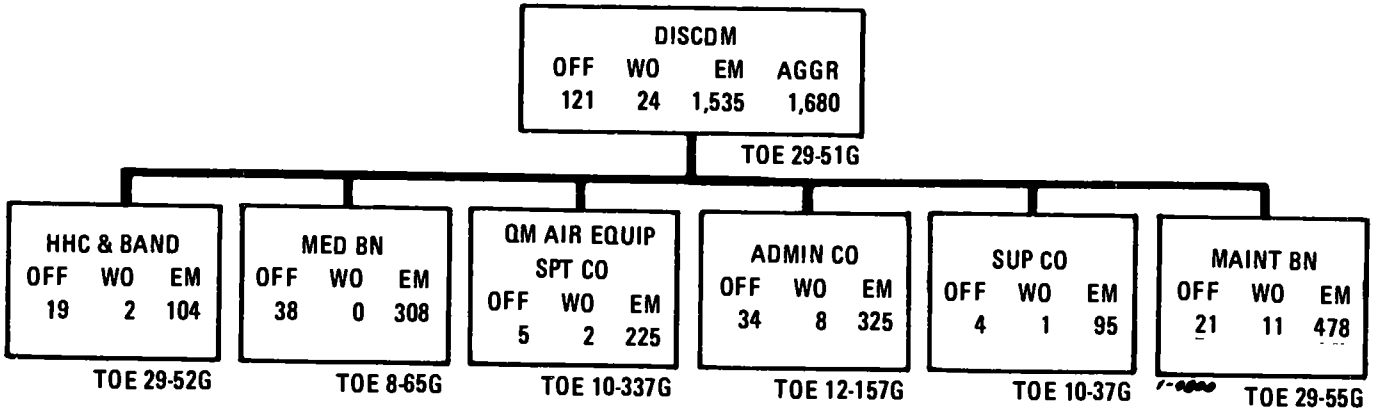

1. MISSION

To provide division-level supply, field maintenance, medical service, and miscellaneous services for all assigned or attached elements of the division.

2. ASSIGNMENT

Organic to airborne division, TOE 57G.

3. CAPABILITIES

a. Provides division-level logistic support, to include storage of all classes of supply.

b. Provides direct support maintenance, except for medical and cryptographic items, light textiles, and ammunition.

c. Provides division-level medical service, including evacuation, establishment and operation of clearing stations, emergency dental treatment, and medical supply.

d. Has a limited capability to carry division reserve supplies.

e. Provides staff advice to the division commander on quartermaster and ordnance operations and on all supply and maintenance functions, except maintenance of medical and cryptographic materiel, and on transportation matters pertaining to operations of DISCOM.

f. Furnishes music for division functions.

g. Provides air equipment supply and maintenance support to the division.

4. MOBILITY

Mobility of units organic to the DISCOM is included in appropriate component TOE extracts.

Figure 1–44. Support command, airborne division.

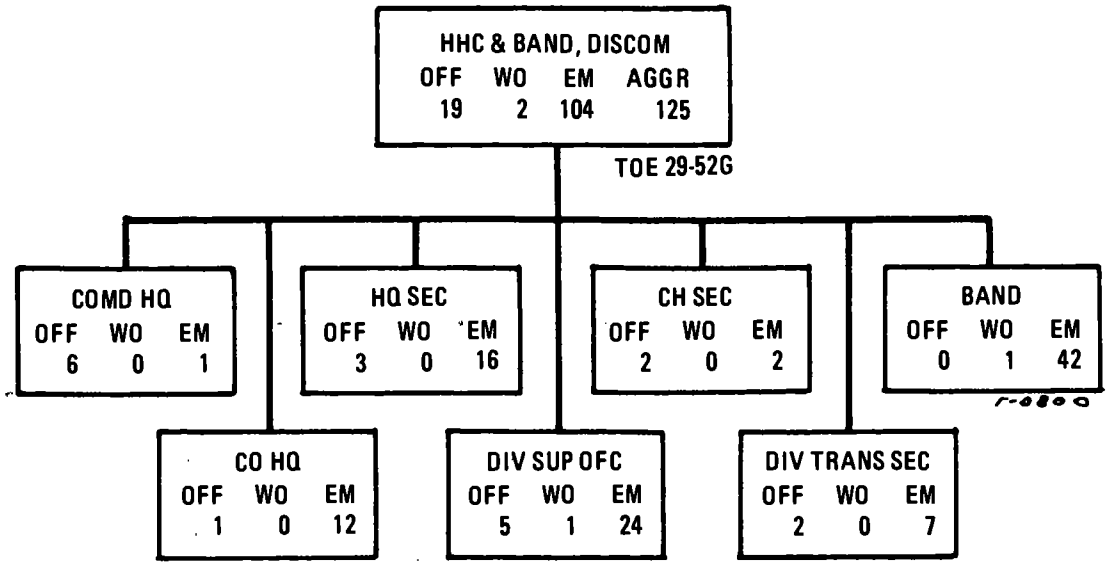

1. MISSION

a. To provide command and control of DISCOM organic and attached units, except for operational control of the division special staff elements of the administration company, TOE 12-157G.

b. To promote and maintain the morale and *esprit de corps* of troops by providing suitable music for military formations and recreational activities.

c. To provide logistic support within the capability of assigned or attached units.

2. ASSIGNMENT

Organic to support command, airborne division, TOE 29-51G.

3. CAPABILITIES

a. Provides supervision and control of logistic operations of the division.

b. Advises the division commander on combat service support operations, except for medical service.

c. Provides nontechnical training of personnel units of DISCOM.

d. Supervises routine unit administration and supply within DISCOM.

e. Conducts inspections to determine the fitness of DISCOM and attached units to perform tactical functions in the field.

f. Consolidates and disseminates information to DISCOM and higher HQ.

g. Coordinates rear area protection plans for the division support area.

h. Provides military and recreational music.

i. Provides the command element for division supply and transportation activities.

j. Depends on the administration company, airborne division, TOE 12-157G, for personnel administrative services.

4. MOBILITY

a. Twenty-percent mobile in organic transportation.

b. One hundred-percent air transportable in medium transport aircraft.

Figure 1–45. HHC and band, support command, airborne division.

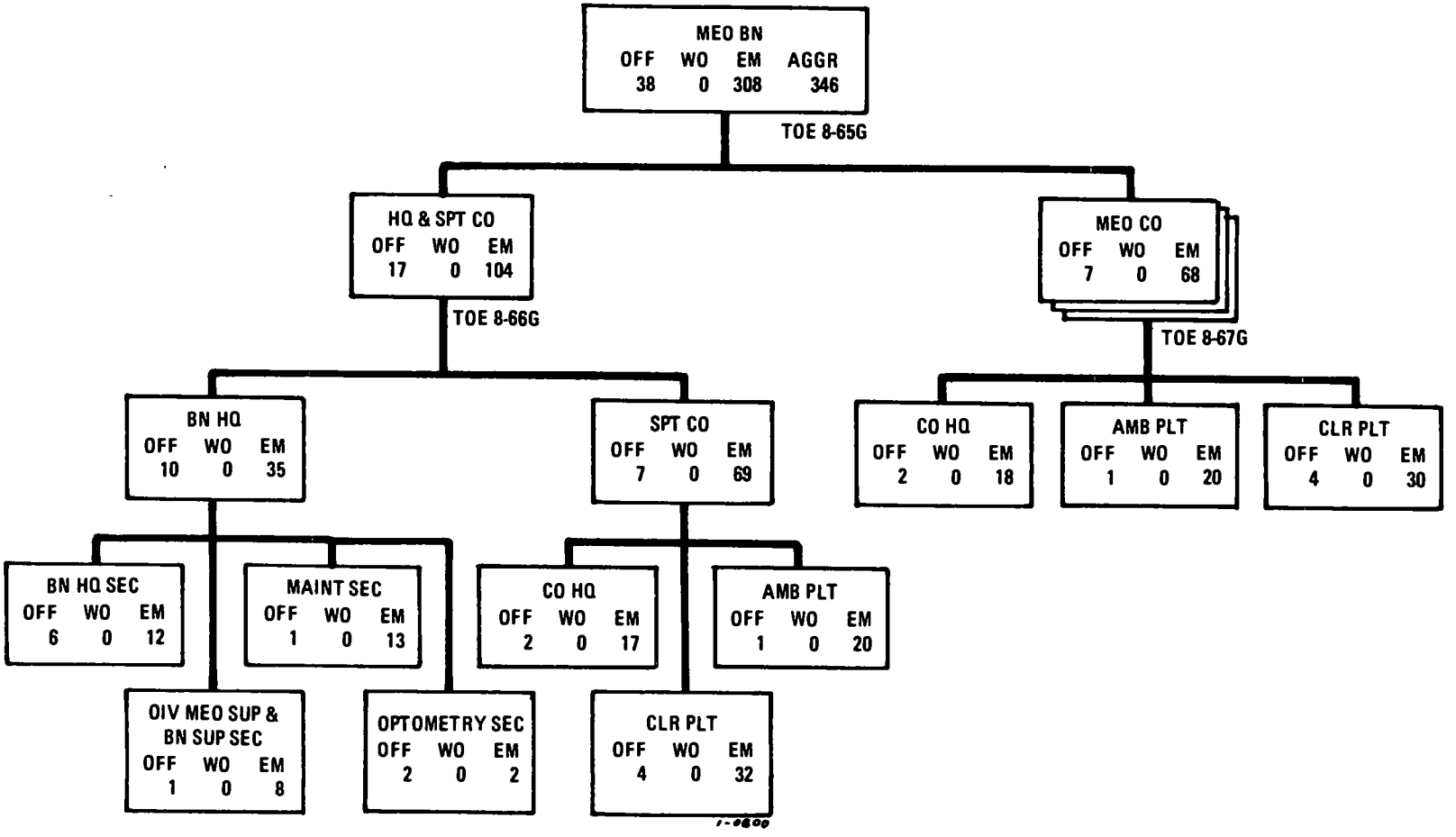

Figure 1–46. Medical battalion, support command, airborne division.

1. MISSION

To provide division- and unit-level medical service to divisional units, as required.

2. ASSIGNMENT

Organic to support command, airborne division, TOE 29-51G.

3. CAPABILITIES

a. Provides ambulance evacuation.

b. Furnishes clearing station treatment.

c. Manages psychiatric problems.

d. Provides unit-level medical service on an area basis.

e. Provides division-level medical supply and organizational medical equipment maintenance support for units organic or attached to the division.

4. MOBILITY

a. Ground mobility of units organic to this battalion is included in appropriate component TOE extracts.

b. One hundred-percent air transportable.

TOE 8-66G HQ AND SPT CO, MED BN

1. MISSION

a. To provide command, control, administration, and logistic support for the medical battalion and to plan for its employment.

b. To provide division- and unit-level medical service, as required, on an area basis to divisional units operating in the division rear area.

2. ASSIGNMENT

Organic to medical battalion, support command, airborne division, TOE 8-65G.

3. CAPABILITIES

a. Plans for and provides command, control, and supervision of division- and unit-level medical service rendered by elements of the medical battalion and attached units.

b. Provides division-level medical supply support and organizational medical equipment maintenance support for units organic or attached to the division.

c. Performs battalion-level organizational vehicular maintenance for organic elements.

d. Receives, sorts, and temporarily provides medical and surgical treatment for 80 patients. When the division generates an abnormally high patient workload, the clearing platoon can expand its facilities to accommodate 120 patients for a limited period.

e. Provides emergency dental treatment.

f. Evacuates patients from unit aid stations.

g. Furnishes unit-level medical service on an area basis to divisional units having no organic medical element.

h. Provides intradivisional transportation of medical supplies and equipment.

i. May be used in an emergency as a unit replacement for one of the medical companies operating in support of a brigade when the division base has been provided medical support by the next higher echelon of medical service.

j. Provides optometric service and presurfaced single-vision prescription spectacle fabrication and repair services for units organic or attached to the division.

k. Depends on the division administration company, TOE 12-157G, for personnel services.

4. MOBILITY

a. Seventy-percent mobile in organic transportation.

b. One hundred-percent air transportable.

Figure 1–46—Continued

1. MISSION

To provide division- and unit-level medical service, as required, on an area basis to divisional units operating in the brigade area.

2. ASSIGNMENT

Organic to medical battalion, support command, airborne division, TOE 8-65G.

3. CAPABILITIES

a. Receives, sorts, and temporarily provides medical and surgical treatment for 80 patients. When the division generates an abnormally high patient workload, the clearing platoon can expand its facilities to accommodate 120 patients for a limited period.

b. Provides emergency dental treatment.

c. Evacuates patients from unit aid stations.

d. Furnishes unit-level medical service on an area basis to divisional units having no organic medical element.

e. Provides intradivisional transportation of medical supplies and equipment.

f. Depends on the division administration company, TOE 12-157G, for personnel services.

g. When required to support more than four combat battalions, clearing station and evacuation elements must be augmented.

4. MOBILITY

a. Eighty-percent mobile in organic transportation.

b. One hundred-percent air transportable.

Figure 1–46—Continued

Table 1-32. Summary of Equipment—Engineer Battalion, Airborne Division

1	2	3	4	5	6
LIN	Nomenclature	HHC (5-26G)	3 engr co (5-27G)		Bn total (5-25G)
			(1)	(3)	
	CLASS 7B—GROUND SUPPORT				
1 J43918	GEN ST GAS ENG+1.5KW 60CY 1PH 2 WIRE AC 120V SHOCK	1	1	3	4
2 J45699	GEN ST GAS ENG+3KW 60CY 1-3PH 120/240V 120/208V SKID SHOCK.	5	1	3	8
3 J74920	GRADER ROAD MOTORIZED+DSL DRVN 10000LB 12FT BLADE W/LEAN FRTWHL.	4	0	0	4
4 L76351	LOADER SCOOP TYPE+DSL DRVN 4 WHLS 1-1/2 CU YD	4	0	0	4
5 P11866	PNEUMATIC TOOL AND COMPRESSOR OUTFIT+250 CFM TRLR MTD.	2	0	0	2
6 P91756	PUMP CENTRF+GAS DRVN FRAME MTD 1-1/2 IN 65GPM 50 FT HD.	0	2	6	6
7 P96640	PUMPING ASSEMBLY FLAMMABLE LIQUID BULK TRANSFER+.	1	0	0	1
8 W80378	TRACTOR FULL TRCKD LOW SPD+ DSL LGHT DBP W/ BULDOZ SCARIF TETH PC.	6	0	0	6
9 Y35212	WATER PURIF EQUIP+ TRLR MTD DIATOMITE FILTER 600 GPH.	5	0	0	5
	CLASS 7G—ELECTRONICS				
10 Q32756	RADIO SET AN/GRC-106	1	0	0	1
11 Q53001	RADIO SET AN/VRC-46	6	3	9	15
12 Q54154	RADIO SET AN/VRC-47	2	2	6	8
13 Q55114	RADIO SET AN/VRC-49	1	0	0	1
14 U81707	SWITCHBOARD TELEPHONE MANUAL+SB-22/PT	2	0	0	2
15 U82529	SWITCHBOARD TELEPHONE MANUAL+SB-993/GT	0	4	12	12
16 V30252	TELEPHONE SET+TA-1/PT	0	12	36	36
17 V31211	TELEPHONE SET+TA-312/PT	12	8	24	36
	CLASS 7K—TACTICAL VEHICLES				
18 W94441	TRAILER BASIC UTILITY+2-1/2 TON 2 SINGLE WHEELS W/E.	0	3	9	9
19 W95400	TRAILER CARGO+1/4 TON 2 WHEEL W/E	12	4	12	24
20 W95537	TRAILER CARGO+3/4 TON 2 WHEEL W/E	12	4	12	24
21 W95811	TRAILER CARGO+1-1/2 TON 2 WHEEL W/E	5	0	0	5
22 W98825	TRAILER TANK+WATER 400 GALLON 1-1/2 TON 2 WHEEL W/E.	1	1	3	4
23 X38639	TRUCK AMBULANCE+1/4 TON 4X4 W/E	1	0	0	1
24 X39872	TRUCK CARGO+3/4 TON 4X4 W/WINCH W/E	13	13	39	52
25 X40009	TRUCK CARGO+2-1/2 TON 6X6 W/E	1	0	0	1
26 X40146	TRUCK CARGO+2-1/2 TON 6X6 W/WINCH W/E	3	1	3	6
27 X43434	TRUCK DUMP+2-1/2 TON 6X6 W/WINCH W/E	15	4	12	27
28 X55627	TRUCK PLATFORM UTILITY+1/2 TON 4X4 W/E	1	9	27	28
29 X60833	TRUCK UTILITY+1/4 TON 4X4 W/E	16	4	12	28
30 X63162	TRUCK WRECKER+2-1/2 TON 6X6 W/WINCH W/E	1	0	0	1
	CLASS 7M—WEAPONS				
31 G02204	DETECTING SET MINE+PTBL METALLIC AND NON-METALLIC.	5	9	27	32
32 G02341	DETECTING SET MINE+PTBL METALLIC	5	9	27	32
33 G02478	DETECTING SET MINE TRUCK MOUNTED+	1	0	0	1
34 L44575	LAUNCHER GRENADE+40 MILLIMETER	8	183	549	557
35 L92386	MACHINE GUN 7.62 MILLIMETER+LIGHT FLEXIBLE	5	4	12	17
36 M75714	MOUNT TRIPOD MACHINE GUN+7.62 MILLIMETER	5	4	12	17
37 N96741	PISTOL CALIBER .45 AUTOMATIC+	32	22	66	98
38 R94977	RIFLE 5.56 MILLIMETER+W/E	152	109	327	479

Table 1-32. Summary of Equipment—Engineer Battalion, Airborne Division—Continued

1	2	3	4	5	6
LIN	Nomenclature	HHC (5-26G)	8 engr co (5-27G)		Bn total (5-25G)
			(1)	(3)	
	CLASS 7Q—GENERAL EQUIPMENT				
39 B84404	BOAT RECONNAISSANCE+PNEUMATIC 3 MAN	2	3	9	11
40 L85420	LUBRICAT-SERV UNIT PWR OPER+TRLR MTD 15CF AIR COMP GAS DRVN WZD.	1	0	0	1
41 T10138	SHOP CONTACT MAINT TRK MTD+	1	0	0	1
42 T13152	SHOP EQUIP ORGANZL REP LIGHT TRK MTD+	1	0	0	1
43 V12141	TANK AND PUMP UNIT LIQUID DISPENSING TRUCK-MOUNTING+.	2	0	0	2

Table 1-33. Summary of Equipment—Signal Battalion, Airborne Division

1	2	3	4	5	6
LIN	Nomenclature	HHC (11-216G)	Comd op co (11-217G)	Spt op co (11-218G)	Bn total (11-215G)
	CLASS 7B—GROUND SUPPORT				
1 J41589	GENERATOR SET GASOLINE ENGINE TRAILER MTD+ PU-332/G.	2	3	4	9
2 J43918	GEN ST GAS ENG+1.5KW 60CY 1PH 2 WIRE AC 120V SHOCK	1	0	0	1
	CLASS 7G—ELECTRONICS				
3 Q32756	RADIO SET AN/GRC-106	1	5	0	6
4 Q50421	RADIO SET AN/VRC-24	0	1	0	1
5 Q53001	RADIO SET AN/VRC-46	2	6	6	14
6 Q54154	RADIO SET AN/VRC-47	1	0	0	1
7 Q55114	RADIO SET AN/VRC-49	0	2	7	9
8 U81707	SWITCHBOARD TELEPHONE MANUAL+SB-22/PT	0	2	6	8
9 U82255	SWITCHBOARD TELEPHONE MANUAL+SB-86/P	0	5	1	6
10 V31211	TELEPHONE SET+TA-312/PT	0	181	60	241
11 V41968	TELETYPEWRITER SET+AN/GGC-3	1	4	8	13
12 V42105	TELETYPEWRITER SET+AN/PGC-1	1	4	8	13
	CLASS 7K—TACTICAL VEHICLES				
13 W95400	TRAILER CARGO+1/4 TON 2 WHEEL W/E	3	24	32	59
14 W95537	TRAILER CARGO+3/4 TON 2 WHEEL W/E	6	13	7	26
15 W95811	TRAILER CARGO+1-1/2 TON 2 WHEEL W/E	2	0	0	2
16 W98825	TRAILER TANK+WATER 400 GALLON 1-1/2 TON 2 WHEEL W/E.	2	0	0	2
17 X39735	TRUCK CARGO+3/4 TON 4×4 W/E	8	26	26	60
18 X40009	TRUCK CARGO+2-1/2 TON 6×6 W/E	2	0	0	2
19 X40146	TRUCK CARGO+2-1/2 TON 6×6 W/WINCH W/E	2	0	0	2
20 X55627	TRUCK PLATFORM UTILITY+ 1/2 TON 4×4 W/E	0	3	0	3
21 X60833	TRUCK UTILITY+1/4 TON 4×4 W/E	3	24	31	58
22 X63162	TRUCK WRECKER+2-1/2 TON 6×6 W/WINCH W/E	1	0	0	1
	CLASS 7M—WEAPONS				
23 G02341	DETECTING SET MINE+PTBL METALLIC	2	0	0	2
24 L44575	LAUNCHER GRENADE+40 MILLIMETER	2	9	4	15

Table 1-33. Summary of Equipment—Signal Battalion, Airborne Division—Continued

1	2	3	4	5	6
LIN	Nomenclature	HHC (11-216G)	Comd op co (11-217G)	Spt op co (11-218G)	Bn total (11-215G)
25 L92386	MACHINE GUN 7.62 MILLIMETER+LIGHT FLEXIBLE	0	1	1	2
26 M75714	MOUNT TRIPOD MACHINE GUN+7.62 MILLIMETER	0	1	1	2
27 N96741	PISTOL CALIBER .45 AUTOMATIC+	8	10	5	23
28 R94977	RIFLE 5.56 MILLIMETER+W/E	85	223	218	526
	CLASS 7Q—GENERAL EQUIPMENT				
29 V12141	TANK AND PUMP UNIT LIQUID DISPENSING TRUCK-MOUNTING+.	1	0	0	1
30 V19950	TANK UNIT LIQUID DISPENSING TRAILER MOUNTING+	1	0	0	1

Table 1-34. Summary of Equipment—Support Command, Airborne Division

1	2	3	4	5	6	7	8	9
LIN	Nomenclature	HHC & band (29-52G)	Med bn (8-65G)	Sup co (10-37G)	QM air equip spt co (10-337G)	Admin co (12-157G)	Maint bn (29-55G)	DISCOM total (29-51G)
	CLASS 2A—AIR							
1 X23227	TRANSPORTER AIRMOBILE+ HYD LIFT FOR SHELTER AND X-4 CONTAINER.	0	0	0	0	0	7	7
	CLASS 2Q—GENERAL EQUIPMENT							
2 W98270	TRAILER PLATFORM WAREHOUSE+ 6000 LB CAP 108L×48W IN PNEUM.	0	0	6	24	0	0	30
3 Z13157	CARD PUNCH MACHINE+ ADPE	0	0	0	0	5	1	6
4 Z15494	COLLATOR+ ADPE	0	0	0	0	2	0	2
5 Z20571	DATA TRANSCEIVER CARD UNIT+ ADPE	0	0	0	0	1	1	2
6 Z20669	DATA TRANSMISSION EQUIPMENT+ ADPE.	0	0	0	0	1	1	2
7 Z25208	ELECTRONIC COMPUTER+ ADPE	0	0	0	0	1	0	1
8 Z35210	INTERPRETER+ ADPE	0	0	0	0	1	0	1
9 Z74660	SORTER+ ADPE	0	0	0	0	3	0	3
10 Z95673	VERIFIER+ ADPE	0	0	0	0	5	1	6
	CLASS 7A—AIR							
11 K31786	HELICOPTER UTILITY+ UH-1D	0	0	0	0	0	2	2
	CLASS 7B—GROUND SUPPORT							
12 E68694	COMP RCP PWR DRVN+ AIR REC AC 208-416V 60CY 3PH 15CFM 175 PSI.	0	0	0	3	0	0	3
13 E69105	COMP RCP PWR DRVN+ AIR REC GAS DRVN 5 CFM 175 PSI.	0	0	0	0	0	5	5
14 E70064	COMP RCP PWR DRVN+ TRK 2 WHL PNEU TIRES GAS DRVN 5 CFM 175 PSI.	0	3	0	0	0	0	3
15 F43077	CRANE WHL MTD+ 7 TON W/BOOM CRANE 24 FT W/BLK TKLE 9 FT.	0	0	0	3	0	0	3
16 J35835	GEN ST DSL ENG+ 15KW 60CY 3PH AC 120/208 240/416V SKID.	0	0	0	3	4	0	7
17 J36109	GEN ST DSL ENG+ 30KW 60CY 3PH AC 120/208 240/416V 50CY SKID.	0	0	0	0	2	0	2

Table 1-34. Summary of Equipment—Support Command, Airborne Division—Continued

1	2		3	4	5	6	7	8	9
	LIN	Nomenclature	HHC & band (29-52G)	Med bn (8-65G)	Sup co (10-37G)	QM air equip spt co (10-337G)	Admin co (12-157G)	Maint bn (29-55G)	DISCOM total (29-51G)
18	J41178	GENERATOR SET GASOLINE ENGINE TRAILER MTD+ PU 290/MR.	0	0	0	0	0	13	13
19	J42959	GEN ST GAS ENG+ 0.5KW 60CY 1PH AC 120V SHK.	0	0	0	1	0	0	1
20	J43918	GEN ST GAS ENG+ 1.5KW 60CY 1PH 2 WIRE AC 120V SHOCK.	1	9	1	1	3	6	21
21	J44055	GEN ST GAS ENG+ 1.5KW DC 28V SHOCK	0	12	0	0	0	4	16
22	J45699	GEN ST GAS ENG+ 3KW 60CY 1-3PH 120/240V 120/208V SKID SHOCK.	0	1	2	0	2	6	11
23	J47068	GEN ST GAS ENG+ 5KW 60CY 1-3PH AC 120/240 120/208V SKD-SHK MTD.	0	8	0	3	2	7	20
24	P96640	PUMPING ASSEMBLY FLAMMABLE LIQUID BULK TRANSFER+.	0	1	8	0	0	0	9
25	W89557	TRACTOR WHEELED WAREHOUSE+ GAS 4000 LB.	0	0	1	3	0	0	4
26	X48846	TRUCK LIFT FORK AIRMBLE+ MULTIFUEL 4000LB CAP ROUGH TERRAIN.	0	0	4	3	0	0	7
27	X48914	TRUCK LIFT FORK+ DSL DRVN 6000 LB CAP ROUGH TERRAIN.	0	0	0	0	0	1	1
28	X49051	TRUCK LIFT FORK+ DSL DRVN 10000 LB CAP ROUGH TERRAIN.	0	0	0	3	0	0	3
		GLASS 7G—ELECTRONICS							
29	Q32756	RADIO SET AN/GRC-106	1	0	0	0	0	0	1
30	Q42092	RADIO SET+ AN/URC-10	0	0	0	0	0	2	2
31	Q53001	RADIO SET AN/VRC-46	3	9	3	1	0	5	21
32	Q54154	RADIO SET AN/VRC-47	3	4	1	1	0	2	11
33	Q55114	RADIO SET AN/VRC-49	0	1	0	0	0	0	1
34	U817070	SWITCHBOARD TELEPHONE MANUAL+ SB-22/PT.	1	1	1	1	0	2	6
35	U82529	SWITCHBOARD TELEPHONE MANUAL+ SB-993/GT.	0	4	0	0	3	1	8
36	V30252	TELEPHONE SET+ TA-1/PT	0	0	0	0	6	0	6
37	V31211	TELEPHONE SET+ TA-312/PT	11	24	6	7	4	21	73
		CLASS 7K—TACTICAL VEHICLES							
38	E02670	CHASSIS TRAILER+ GENERAL PURPOSE 3-1/2 TON 2 WHEEL W/E.	0	0	0	0	2	0	2
39	E02807	CHASSIS TRAILER+ GENERATOR 2-1/2 TON 2 WHEEL W/E.	0	0	0	0	6	0	6
40	G34805	DOLLY SET LIFT TRANSPORTABLE SHELTER+ 2-1/2 TON.	0	0	0	0	0	41	41
41	S72024	SEMITRAILER STAKE+ 12 TON 4 WHEEL W/E.	0	0	0	3	0	0	3
42	S74079	SEMITRAILER VAN+ CARGO 12 TON 4 WHEEL W/E.	0	0	0	0	0	7	7
43	S74490	SEMITRAILER VAN+ EXPANSIBLE 6 TON 4 WHEEL W/E.	0	0	0	0	8	0	8
44	W95400	TRAILER CARGO+ 1/4 TON 2 WHEEL W/E	7	13	3	5	10	6	44
45	W95537	TRAILER CARGO+ 3/4 TON 2 WHEEL W/E	2	55	6	1	6	25	95
46	W95811	TRAILER CARGO+ 1-1/2 TON 2 WHEEL W/E.	0	0	1	6	0	11	18
47	W98825	TRAILER TANK+ WATER 400 GALLON 1-1/2 TON 2 WHEEL W/E.	1	4	1	1	2	2	11
48	X38639	TRUCK AMBULANCE+ 1/4 TON 4×4 W/E	0	36	0	0	0	0	36
49	X39735	TRUCK CARGO+ 3/4 TON 4×4 W/E	2	45	6	1	8	33	95

Table 1–34. Summary of Equipment—Support Command, Airborne Division—Continued

1	2	3	4	5	6	7	8	9
LIN	Nomenclature	HHC & band (29–52G)	Med bn (8–65G)	Sup co (10–37G)	QM air equip spt co (10–337G)	Admin co (12–157G)	Maint bn (29–55G)	DISCOM total (29–51G)
X39872	TRUCK CARGO+ 3/4 TON 4×4 W/WINCH W/E.	0	14	0	0	0	2	16
X40009	TRUCK CARGO+ 2-1/2 TON 6×6 W/E.....	1	4	3	7	5	15	35
X40146	TRUCK CARGO+ 2-1/2 TON 6×6 W/WINCH W/E.	0	0	1	0	0	1	2
X40283	TRUCK CARGO+ 2-1/2 TON 6×6 XLWB W/E.	0	0	0	0	1	0	1
X55627	TRUCK PLATFORM UTILITY+ 1/2 TON 4×4 W/E.	0	0	0	0	0	3	3
X59326	TRUCK TRACTOR+ 5 TON 6×6 W/E.....	0	0	0	3	8	7	18
X60833	TRUCK UTILITY+ 1/4 TON 4×4 W/E.....	9	14	3	5	13	14	58
X62340	TRUCK VAN+ SHOP 2-1/2 TON 6×6 W/E..	0	0	0	0	2	0	2
X63025	TRUCK WRECKER+ CRANE 2-1/2 TON 6×6 W/WINCH W/E.	0	0	1	0	0	1	2
X63094	TRUCK WRECKER+ 3/4 TON 4×4 W/E...	0	0	0	0	0	5	5
	CLASS 7M—WEAPONS							
A90117	ARMAMENT SUBSYSTEM HELICOPTER 7.62 MILLIMETER MACHINE GUN+ LIGHT.	0	0	0	0	0	2	2
G02341	DETECTING SET MINE+ PTBL METALLIC.	0	0	0	0	0	2	2
L44575	LAUNCHER GRENADE+ 40 MILLIMETER.	2	0	0	0	12	0	14
L91975	MACHINE GUN CALIBER .50+ HB FLEXBLE FOR GROUND USE.	0	0	0	0	8	0	8
L92386	MACHINE GUN 7.62 MILLIMETER+ LIGHT FLEXIBLE.	2	0	6	0	24	6	38
M75577	MOUNT TRIPOD MACHINE GUN+ HEAVY CALIBER 50.	0	0	0	0	8	0	8
M75714	MOUNT TRIPOD MACHINE GUN+ 7.62 MILLIMETER.	2	0	6	0	24	6	38
N96741	PISTOL CALIBER .45 AUTOMATIC+.....	11	23	1	2	25	4	66
R91244	REVOLVER CALIBER .38+ 4 INCH BARREL.	0	0	0	0	0	11	11
R94977	RIFLE 5.56 MILLIMETER+ W/E.....	112	453	99	230	529	541	1,964
	CLASS 7Q—GENERAL EQUIPMENT							
H48568	FILTER METER MODULE+ WITH FLOW DIVIDERS AND HOSE ASSEMBLIES.	0	0	3	0	0	0	3
T10138	SHOP EQUIP CONTACT MAINT TRK MTD+.	0	0	0	0	0	4	4
V12141	TANK AND PUMP UNIT LIQUID DISPENSING TRUCKMOUNTING+.	0	0	1	0	0	0	1

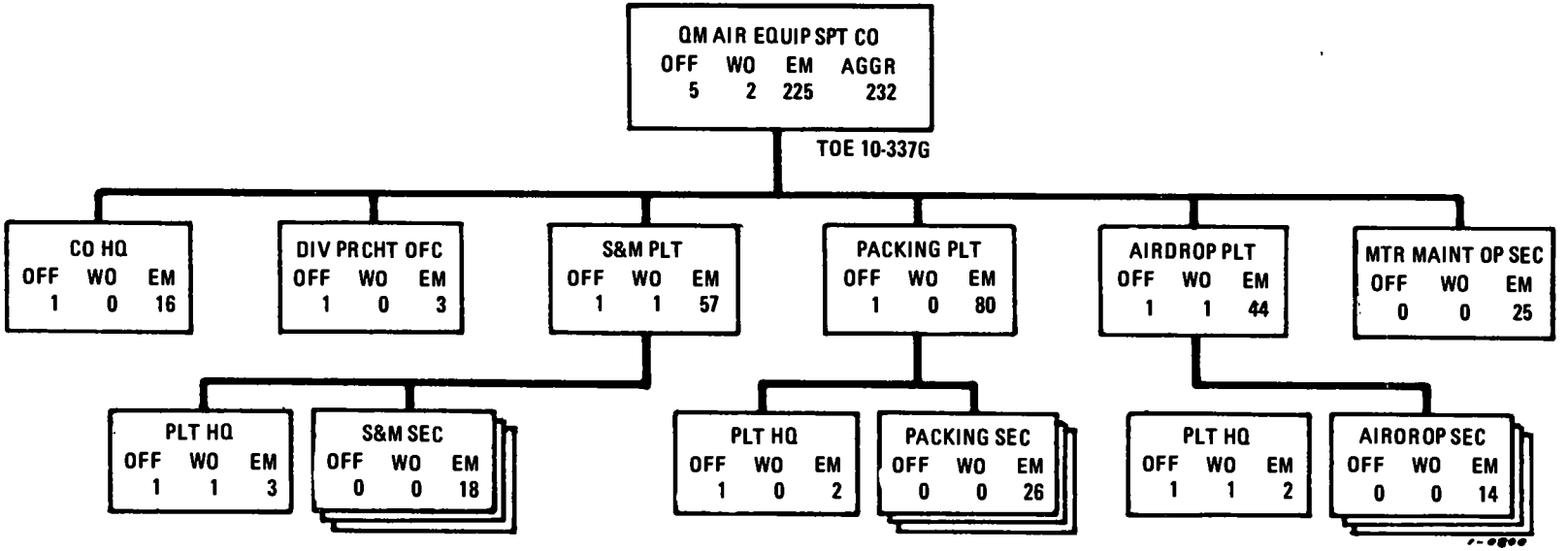

1. MISSION

To support an airborne division by providing–

a. Acquisition, inspection, packing, storage, maintenance, and issue of airdrop equipment required for airdrop of personnel, supplies, and equipment.

b. Inspection and technical assistance in packing, rigging, and loading supplies and equipment.

2. ASSIGNMENT

Organic to support command, airborne division, TOE 29-51G.

3. CAPABILITIES

Supports, as indicated below, an airborne division with a strength of 12,500 personnel under operational conditions. To provide the installation and typical training support required during the buildup of organic units of the division, team EG from TOE 10-500G must be assigned.

a. Requisitions, receives, stores, and issues airdrop items.

b. Inspects and packs parachutes.

c. Inspects and provides technical assistance in packing, rigging, and loading supplies and equipment.

d. Provides organizational maintenance for quartermaster airdrop items.

e. Supervises and assists in the recovery and evacuation of airdrop equipment after drop.

f. Provides flexible organizations to support division operational requirements.

g. Provides a pool of airdrop equipment for the division.

h. For prolonged combat periods, must be supported by a nondivisional quartermaster airdrop supply company, TOE 10-407G, to provide continuing daily airdrop support.

i. Depends on the division administration company, TOE 12-157G, for personnel administrative support.

4. MOBILITY

Fixed.

Figure 1–47. Quartermaster air equipment support company, support command, airborne division.

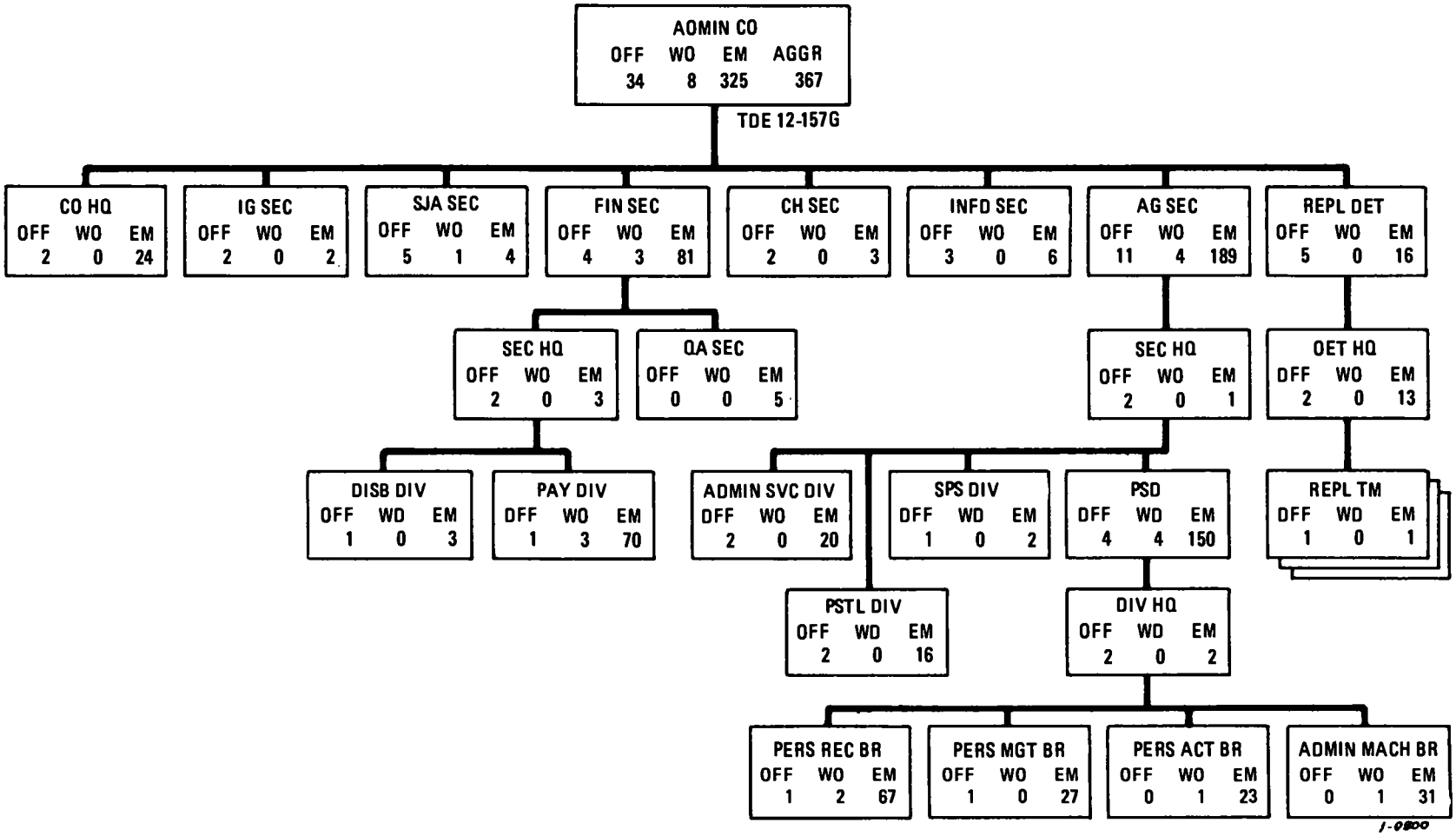

Figure 1–48. Administration company, support command, airborne division.

1. MISSION

a. To serve as a carrier unit that provides support for certain elements of the special staff.

b. To provide the necessary personnel and administrative support to sustain the division, to include replacement support and a centralized, mechanized personnel service for all units assigned or attached to the division.

c. To comprise the division HQ rear echelon, which, during tactical operations, is normally located separately from DISCOM HQ.

2. ASSIGNMENT

Organic to support command, airborne division, TOE 29-51G.

3. CAPABILITIES

a. Provides logistic support of and plans for tactical security for staff agencies assigned to the company.

b. Provides division-level personnel and administrative support for personnel assigned or attached to the division.

c. Provides company-level personnel and administrative support for personnel assigned to the company.

d. Furnishes mess facilities for personnel assigned, attached, or located in the division HQ rear echelon.

e. Performs organizational maintenance on organic vehicles.

f. Provides message center and related services to division main and rear CP's.

g. Direct worker positions in the personnel records, personnel management, and personnel actions branches are computed as follows:

(1) Personnel records branch–one direct worker per 242 troops supported.

(2) Personnel management branch–one direct worker per 577 troops supported.

(3) Personnel actions branch–one direct worker per 714 troops supported.

h. Provides a replacement detachment with the capability to receive, control, and administratively process up to 300 individuals at any given time. This may be any combination of personnel arriving as replacements, returning from the hospital, or departing for rotation or other purposes. Additionally, the replacement detachment can control any number of replacement TOE units that have their own mess capability.

i. Depends on the division communication network for telephone and radio communications.

j. When a combat maneuver battalion is transferred or detached from the division, a personnel team from the personnel service division, AG section, will be transferred with or attached to the maneuver battalion. This personnel team will be composed of those personnel who regularly maintain the maneuver battalion records in the personnel service division.

4. MOBILITY

a. Forty-five-percent mobile in organic vehicles, when using two lifts in administrative movement.

b. One hundred-percent air transportable in medium transport aircraft.

Figure 1–48—Continued

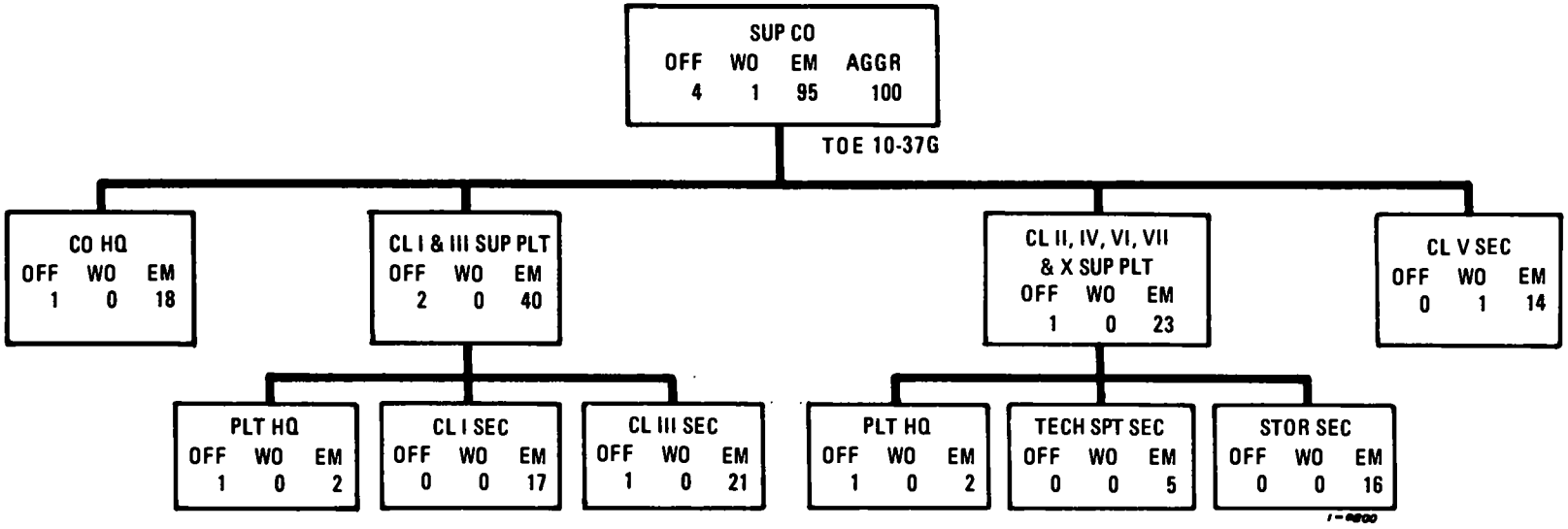

Figure 1-49. Supply company, support command, airborne division.

1. MISSION

a. To support the division and attached units by providing all classes of supply, except for repair parts, aircraft parts and supplies, and medical and airdrop supplies.

b. To provide and maintain the division reserve of supplies and equipment for which the unit is responsible.

2. ASSIGNMENT

Organic to support command, airborne division, TOE 29-51G.

3. CAPABILITIES

a. Operates the division distribution points.

b. Receives from theater service support units, provides temporary storage, and issues class I, II, IV, V, VI, VII, and X supplies and equipment, except for repair parts, aircraft parts and supplies, and medical and airdrop supplies.

c. Receives from theater service support units and provides temporary storage for class III supplies. Under the direction of the division supply office, controls and supervises the operation of division class III transfer and distribution points, employment of bulk fuel transporters used for unit distribution of class III supplies, operation of limited mobile filling stations, and storage of the division reserve of bulk class III supplies.

d. Provides and maintains the division reserve of supplies for which the unit is responsible.

e. Provides battalion-level maintenance for organic vehicles.

f. Appropriate teams from TOE 10-500G will provide graves registration services, limited bath service, and a salvage collecting point to the division.

g. When employed in garrison, in marshaling area or areas, or for an extended period in support of sustained ground combat operations, depends on nondivisional theater service support units for supplemental supply and service support, to include motor transport services.

h. Depends on the division administration company, TOE 12-157G, for personnel services.

4. MOBILITY

a. Fifty-seven-percent mobile in organic transportation.

b. One hundred-percent air transportable in medium transport aircraft.

Figure 1–49—Continued

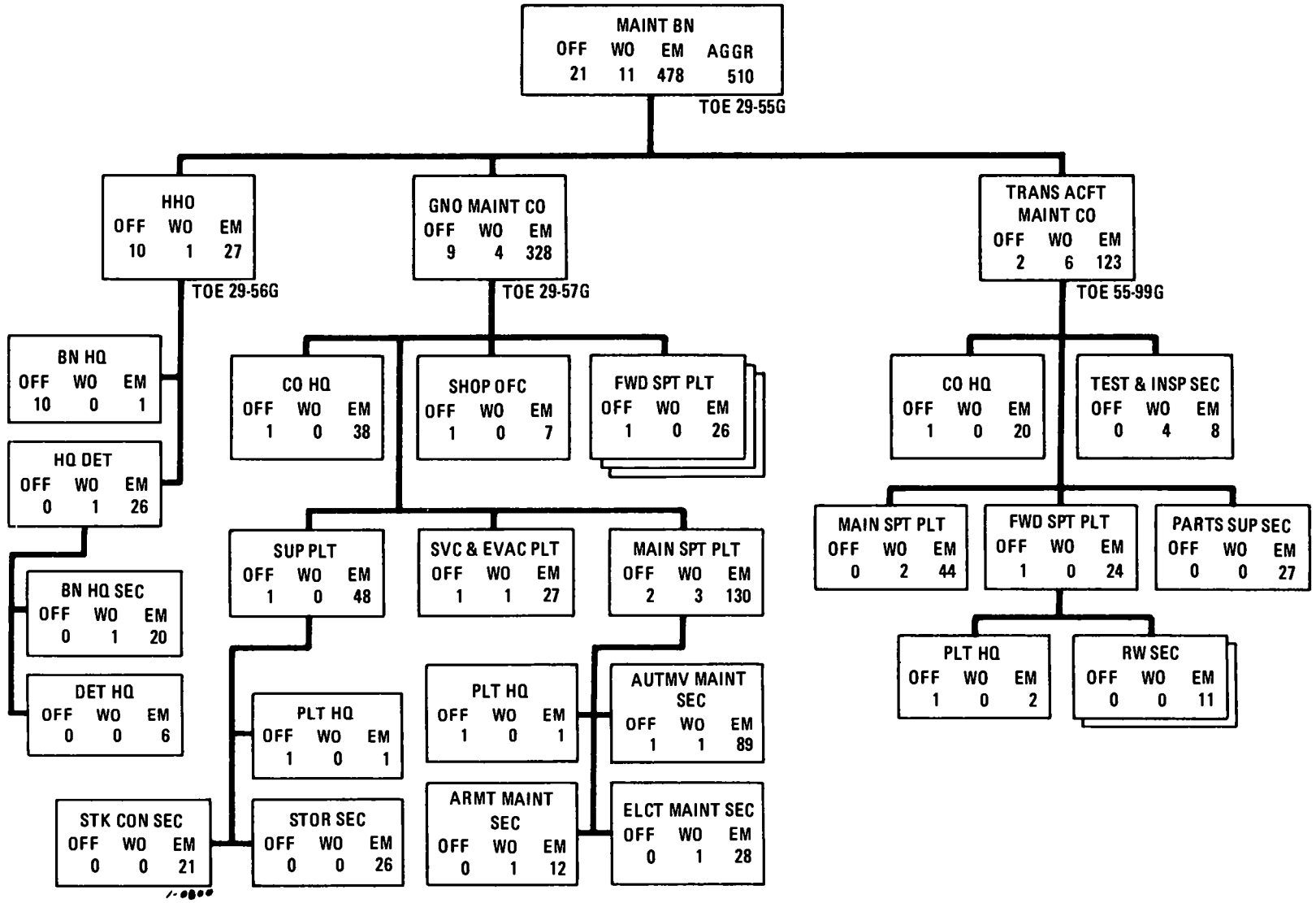

Figure 1–50. Maintenance battalion, support command, airborne division.

TOE 29-55G MAINT BN

1. MISSION

To provide direct support maintenance for all divisional materiel, except for medical, cryptographic, and quartermaster air items.

2. ASSIGNMENT

Organic to support command, airborne division, TOE 29-51G.

3. CAPABILITIES

a. Performs 100-percent direct support maintenance on all authorized divisional equipment, except medical and cryptographic, of a type of airborne division consisting of the division base and nine infantry battalions.

b. Provides technical assistance service to the division.

c. Secures, stocks, and issues repair parts pertaining to the equipment in the division, except for medical, cryptographic, and quartermaster air items.

d. Maintains an operational readiness float of selected items.

e. Provides limited vehicular evacuation assistance to supported units.

f. Depends on other units for medical, dental, and religious services and personnel administration.

4. MOBILITY

a. Forty-percent mobile in organic transportation.

b. One hundred-percent air transportable in medium transport aircraft.

TOE 29-56G HHD, MAINT BN

1. MISSION

To provide command, tactical control, administration, training, and technical supervision of the maintenance battalion, airborne division.

2. ASSIGNMENT

Organic to maintenance battalion, support command, airborne division, TOE 29-55G.

3. CAPABILITIES

a. Commands, supervises, controls, and coordinates the operations of the maintenance companies of the battalion.

b. Provides technical supervision of the conduct of maintenance and repair parts supply functions throughout the division.

c. Depends on the division administration company, TOE 12-157G, for personnel services and on one of its subordinate units for mess and organizational maintenance support.

4. MOBILITY

a. Forty-percent mobile in organic transportation.

b. One hundred-percent air transportable in medium transport aircraft.

Figure 1–50—Continued

TOE 29-57G GND MAINT CO, MAINT BN

1. MISSION

To provide direct support maintenance and repair parts supply service for the division, a base of supply for the maintenance battalion, and supplementary support for the transportation aircraft maintenance company, TOE 55-99G.

2. ASSIGNMENT

Organic to maintenance battalion, support command, airborne division, TOE 29-55G.

3. CAPABILITIES

a. Provides 100-percent battalion maintenance capability in support of a type of airborne division consisting of the division base and nine infantry battalions.

b. Provides direct support maintenance and repair parts supply service for all equipment of the division, except for medical, cryptographic, and quartermaster air equipment and aircraft repair.

c. Maintains an operational readiness float and operates a direct exchange service for selected items.

d. Provides limited vehicular evacuation assistance to supported units.

e. Receives, stores, and issues all repair parts.

f. Provides technical supervision for the conduct of maintenance functions throughout the division.

4. MOBILITY

a. Thirty-percent mobile in organic transportation.

b. One hundred-percent air transportable in medium transport aircraft.

TOE 55-99G TRANS ACFT MAINT CO, MAINT BN

1. MISSION

To provide direct support aircraft maintenance capability as an integral part of DISCOM.

2. ASSIGNMENT

Organic to maintenance battalion, support command, airborne division, TOE 29-55G.

3. CAPABILITIES

a. Provides 9,400 man-hours per month for direct support aircraft maintenance, to include contact teams for onsite repair of aircraft.

b. Provides 800 man-hours per month for direct support maintenance on avionic equipment.

c. Provides 800 man-hours per month for direct support maintenance on aircraft armament systems.

d. Provides a division collecting point for unserviceable, unreparable aircraft.

e. Depends on the division administration company, TOE 12-157G, for personnel administration.

f. Receives, stores, and issues aircraft armament and aircraft and avionic repair parts to supported units.

4. MOBILITY

a. Fifty-percent mobile in organic transportation.

b. One hundred-percent air transportable in medium transport aircraft.

Figure 1-60—Continued

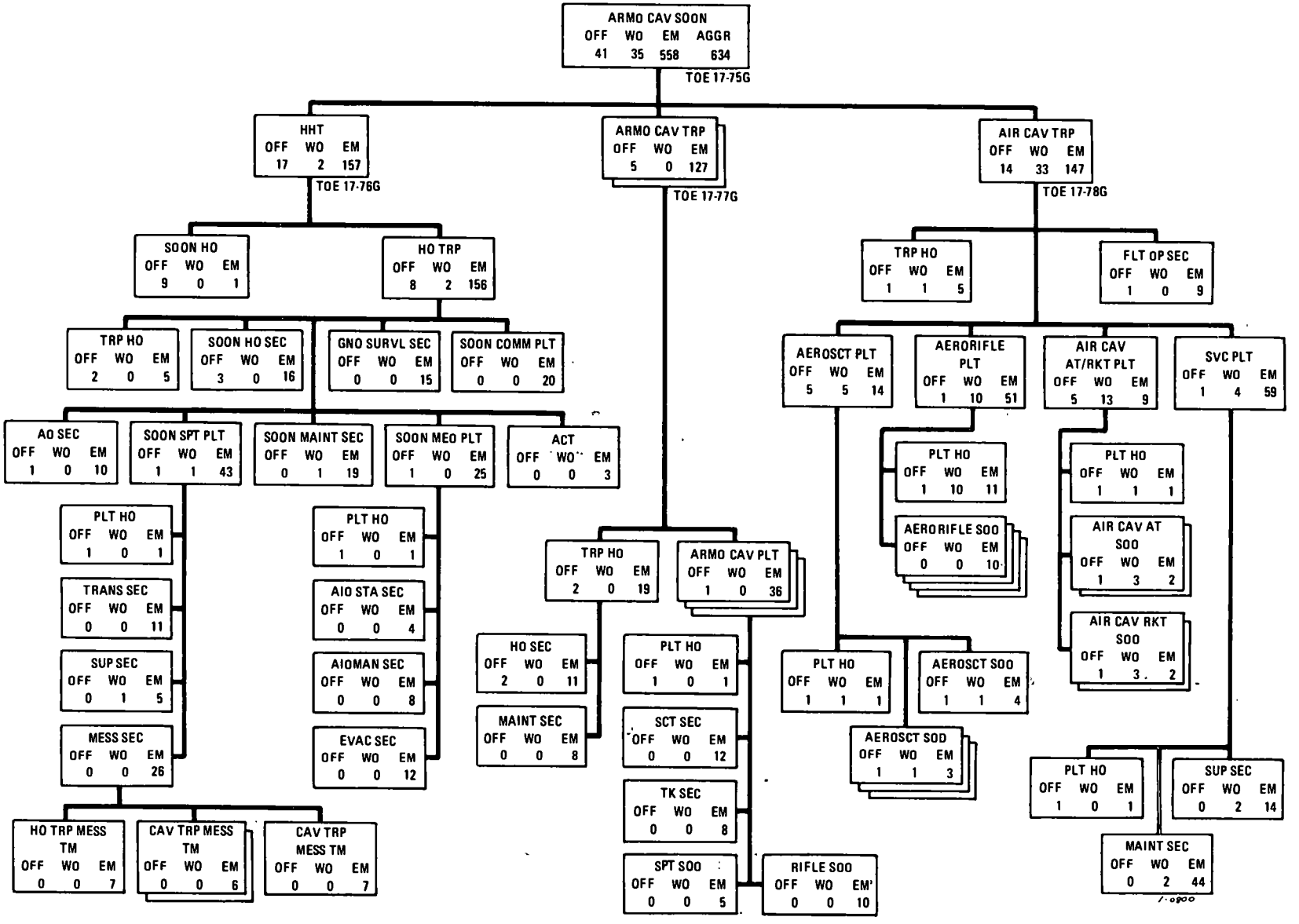

Figure 1–51. Armored cavalry squadron, airborne division.

1. MISSION

To perform reconnaissance; to provide security for the division or unit to which attached; and to engage in offensive, defensive, and delaying actions as an economy-of-force unit.

2. ASSIGNMENT

Organic to airborne division, TOE 57G.

3. CAPABILITIES

a. Conducts ground and air reconnaissance over wide fronts and to extended depths.

b. Collects and reports information of intelligence value, employing ground and air observation.

c. Protects the perimeter or flanks of the division.

d. Provides security between divisional elements or between the division and adjacent units.

e. When reinforced, acts as a division covering force in offensive, defensive, and retrograde operations.

f. Supports squadron operations with organic nonnuclear fire.

g. Conducts radiological monitoring and survey.

h. Performs damage control operations and provides forces for rear area security, when directed.

i. Exploits the success of other units.

j. Provides armed air escort for airmobile operations.

k. When suitably reinforced, conducts extended semi-independent operations.

l. Requires vehicular support to transport a portion of its organic maintenance, mess, and supply equipment. Requires additional vehicular support to transport increased quantities of classes III and V during sustained ground action.

m. Depends on the division administration company, TOE 12-157G, for personnel service.

4. MOBILITY

a. Ninety-percent mobile in organic transportation.

b. One hundred-percent air transportable in medium transport aircraft.

TOE 17-76G HHT, ARMD CAV SQDN

1. MISSION

To furnish command, administration, supply, mess, and maintenance for the armored cavalry squadron, airborne division.

2. ASSIGNMENT

Organic to armored cavalry squadron, airborne division, TOE 17-75G.

3. CAPABILITIES

a. Commands, controls, provides staff planning, furnishes communications, and supervises operations.

b. Furnishes supply, mess, transportation, and administration for organic and attached units.

c. Provides unit-level medical service, to include medical care and intrasquadron evacuation for the armored cavalry squadron. The medical platoon establishes an aid station and provides aidmen to supported units.

d. Provides centralized (squadron) or decentralized (troop) messes, as required.

e. Provides ground surveillance functions.

f. Requires vehicular support to transport a portion of its organic maintenance, mess, and supply equipment. Requires additional vehicular support to transport increased quantities of classes III and V during sustained ground action.

g. Depends on the division administration company, TOE 12-157G, for personnel services.

4. MOBILITY

a. Ninety-percent mobile in organic transportation.

b. One hundred-percent air transportable in medium transport aircraft.

Figure 1–51—Continued

TOE 17-77G ARMD CAV TRP, ARMD CAV SQDN

1. MISSION

To provide security; to perform reconnaissance for the unit to which assigned or attached; and to engage in offensive, defensive, or delaying actions as an economy-of-force unit.

2. ASSIGNMENT

Organic to armored cavalry squadron, airborne division, TOE 17-75G.

3. CAPABILITIES

a. Performs reconnaissance and provides security for the unit to which assigned or attached.

b. Engages in offensive, defensive, or delaying actions.

c. Conducts independent action, when properly reinforced.

d. Depends on the squadron HHT for mess facilities, medical support, and transport of basic and prescribed loads and on the division administration company, TOE 12-157G, for personnel services.

4. MOBILITY

a. One hundred-percent mobile in organic transportation.

b. One hundred-percent air transportable in medium transport aircraft.

TOE 17-78G AIR CAV TRP, ARMD CAV SQDN

1. MISSION

To extend, by air means, the reconnaissance and security capabilities of ground units; to engage in offensive, defensive, or delaying actions within its capability; and to seize and dominate lightly defended areas or terrain features.

2. ASSIGNMENT

Organic to armored cavalry squadron, airborne division, TOE 17-75G.

3. CAPABILITIES

a. Performs air and ground reconnaissance and provides security for the unit to which assigned or attached.

b. Engages in offensive, defensive, or delaying actions.

c. Conducts independent action, when properly reinforced.

d. Depends on the squadron HHT for mess facilities, medical support, and transport of basic and prescribed loads and on the division administration company, TOE 12-157G, for personnel services.

4. MOBILITY

a. One hundred-percent mobile in organic vehicles and aircraft.

b. One hundred-percent air transportable in medium transport aircraft.

Figure 1–51—Continued

Table 1-35. Summary of Equipment—Medical Battalion, Support Command, Airborne Division

1	2	3	4	5	6
LIN	Nomenclature	HQ & spt co (8-66G)	3 med co (8-67G)		Bn total (8-65G)
			(1)	(3)	
	CLASS 7B—GROUND SUPPORT				
1 E70064	COMP RCP PWR DRVN+TRK 2 WHL PNEU TIRES GAS DRVN 5 CFM 175 PSI.	0	1	3	3
2 J43918	GEN ST GAS ENG+1.5KW 60CY 1PH 2 WIRE AC 120V SHOCK.	3	2	6	9
3 J44055	GEN ST GAS ENG+1.5KW DC 28V SHOCK	3	3	9	12
4 J45699	GEN ST GAS ENG+3KW 60CY 1-3PH 120/240V 120/208V SKID SHOCK.	1	0	0	1
5 J47068	GEN ST GAS ENG+5KW 60CY 1-3PH AC 120/240 120/208V SKD-SHK MTD.	2	2	6	8
6 P96640	PUMPING ASSEMBLY FLAMMABLE LIQUID BULK TRANSFER+.	1	0	0	1
	CLASS 7G—ELECTRONICS				
7 Q53001	RADIO SET AN/VRC-46	3	2	6	9
8 Q54154	RADIO SET AN/VRC-47	1	1	3	4
9 Q55114	RADIO SET AN/VRC-49	1	0	0	1
10 U81707	SWITCHBOARD TELEPHONE MANUAL+SB-22/PT	1	0	0	1
11 U82529	SWITCHBOARD TELEPHONE MANUAL+SB-993/GT	1	1	3	4
12 V31211	TELEPHONE SET+TA-312/PT	9	5	15	24
	CLASS 7K—TACTICAL VEHICLES				
13 W95400	TRAILER CARGO+1/4 TON 2 WHEEL W/E	4	3	9	13
14 W95537	TRAILER CARGO+3/4 TON 2 WHEEL W/E	19	12	36	55
15 W98825	TRAILER TANK+WATER 400 GALLON 1-1/2 TON 2 WHEEL W/E.	1	1	3	4
16 X38639	TRUCK AMBULANCE+1/4 TON 4×4 W/E	9	9	27	36
17 X39735	TRUCK CARGO+3/4 TON 4×4 W/E	15	10	30	45
18 X39872	TRUCK CARGO+3/4 TON 4×4 W/WINCH W/E	5	3	9	14
19 X40009	TRUCK CARGO+2-1/2 TON 6×6 W/E	1	1	3	4
20 X60833	TRUCK UTILITY+1/4 TON 4×4 W/E	5	3	9	14
	CLASS 7M—WEAPONS				
21 N96741	PISTOL CALIBER .45 AUTOMATIC+	8	5	15	23
22 R94977	RIFLE 5.56 MILLIMETER+W/E	111	114	342	453

Table 1-36. Summary of Equipment—Maintenance Battalion, Support Command, Airborne Division

1	2	3	4	5	6
LIN	Nomenclature	HHD (29-56G)	Gnd maint co (29-57G)	Trans acft maint co (55-99G)	Bn total (29-55G)
	CLASS 2A—AIR				
1 X23227	TRANSPORTER AIRMOBILE+HYD LIFT FOR SHELTER AND X-4 CONTAINER.	0	0	7	7
	CLASS 2Q—GENERAL EQUIPMENT				
2 Z13157	CARD PUNCH MACHINE+ADPE	0	0	1	1
3 Z20571	DATA TRANSCEIVER CARD UNIT+ADPE	0	0	1	1
4 Z20669	DATA TRANSMISSION EQUIPMENT+ADPE	0	0	1	1
5 Z95673	VERIFIER+ADPE	0	0	1	1

Table 1-36—Summary of Equipment—Maintenance Battalion, Support Command, Airborne Division—Continued

1	2	3	4	5	6
LIN	Nomenclature	HHD (29-56G)	Gnd maint co (29-57G)	Trans acft maint co (55-99G)	Bn total (29-55G)
	CLASS 7A—AIR				
6 K31786	HELICOPTER UTILITY+UH-1D	0	0	2	2
	CLASS 7B—GROUND SUPPORT				
7 E69105	COMP RCP PWR DRVN+AIR REC GAS DRVN 5 CFM 175 PSI.	0	5	0	5
8 J41178	GENERATOR SET GASOLINE ENGINE TRAILER MTD+PU 290/MR.	0	11	2	13
9 J43918	GEN ST GAS ENG+1.5KW 60CY 1PH 2 WIRE AC 120V SHOCK	1	5	0	6
10 J44055	GEN ST GAS ENG+1.5KW DC 28V SHOCK	0	4	0	4
11 J45699	GEN ST GAS ENG+3KW 60CY 1-3PH 120/240V 120/208V SKID SHOCK.	0	5	1	6
12 J47068	GEN ST GAS ENG+5KW 60CY 1-3PH AC 120/240 120/208V SKD-SHK MTD.	0	5	2	7
13 X48914	TRUCK LIFT FORK+DSL DRVN 6000 LB CAP ROUGH TERRAIN.	0	0	1	1
	CLASS 7G—ELECTRONICS				
14 Q42092	RADIO SET+AN/URC-10	0	0	2	2
15 Q53001	RADIO SET AN/VRC-46	0	4	1	5
16 Q54154	RADIO SET AN/VRC-47	1	1	0	2
17 U81707	SWITCHBOARD TELEPHONE MANUAL+SB-22/PT	2	0	0	2
18 U82529	SWITCHBOARD TELEPHONE MANUAL+SB-993/GT	0	0	1	1
19 V31211	TELEPHONE SET+TA-312/PT	4	11	6	21
	CLASS 7K—TACTICAL VEHICLES				
20 G34805	DOLLY SET LIFT TRANSPORTABLE SHELTER+2-1/2 TON.	0	41	0	41
21 S74079	SEMITRAILER VAN+CARGO 12 TON 4 WHEEL W/E	0	0	7	7
22 W95400	TRAILER CARGO+1/4 TON 2 WHEEL W/E	3	1	2	6
23 W95537	TRAILER CARGO+3/4 TON 2 WHEEL W/E	2	17	6	25
24 W95811	TRAILER CARGO+1-1/2 TON 2 WHEEL W/E	0	4	7	11
25 W98825	TRAILER TANK+WATER 400 GALLON 1-1/2 TON 2 WHEEL W/E.	0	1	1	2
26 X39735	TRUCK CARGO+3/4 TON 4×4 W/E	2	27	4	33
27 X39872	TRUCK CARGO+3/4 TON 4×4 W/WINCH W/E	0	0	2	2
28 X40009	TRUCK CARGO+2-1/2 TON 6×6 W/E	0	6	9	15
29 X40146	TRUCK CARGO+2-1/2 TON 6×6 W/WINCH W/E	0	1	1	1
30 X55627	TRUCK PLATFORM UTILITY+1/2 TON 4×4 W/E	0	3	0	3
31 X59326	TRUCK TRACTOR+5 TON 6×6 W/E	0	0	7	7
32 X60833	TRUCK UTILITY+1/4 TON 4×4 W/E	3	8	3	14
33 X63025	TRUCK WRECKER+CRANE 2-1/2 TON 6×6 W/WINCH W/E.	0	0	1	1
34 X63094	TRUCK WRECKER+3/4 TON 4×4 W/E	0	5	0	5
	CLASS 7M—WEAPONS				
35 A90117	ARMAMENT SUBSYSTEM HELICOPTER 7.62 MILLIMETER MACHINE GUN+LIGHT.	0	0	2	2
36 G02341	DETECTING SET MINE+PTBL METALLIC	0	2	0	2
37 L92386	MACHINE GUN 7.62 MILLIMETER+LIGHT FLEXIBLE	0	4	2	6
38 M75714	MOUNT TRIPOD MACHINE GUN+7.62 MILLIMETER	0	4	2	6
39 N96741	PISTOL CALIBER .45 AUTOMATIC+	3	1	0	4
40 R91244	REVOLVER CALIBER .38+4 INCH BARREL	1	0	10	11
41 R94977	RIFLE 5.56 MILLIMETER+W/E	34	340	167	541
	CLASS 7Q—GENERAL EQUIPMENT				
42 T10138	SHOP EQUIP CONTRACT MAINT TRK MTD+	0	3	1	4

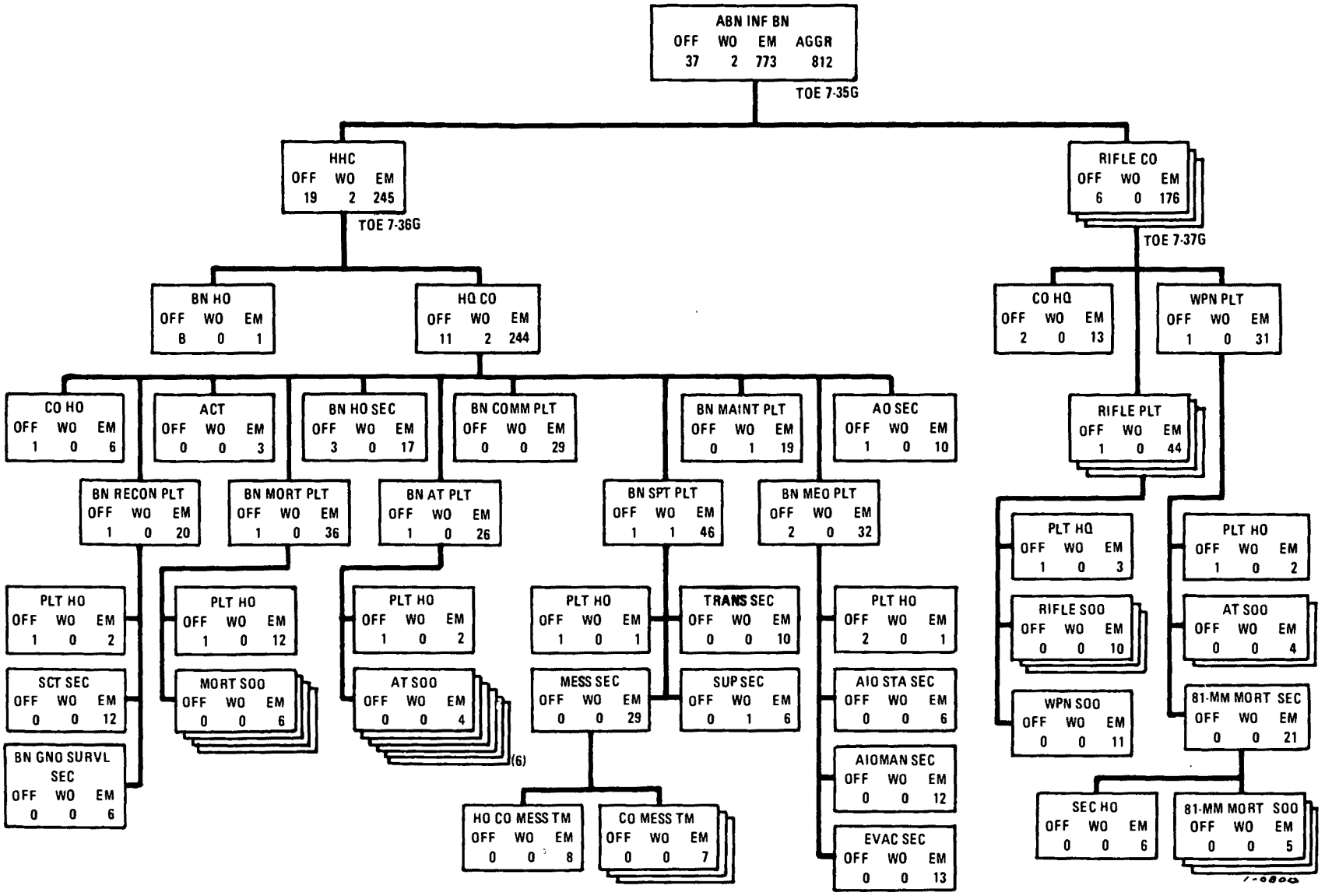

Figure 1–52. Infantry battalion, airborne division.

TOE 7-35G INF BN, ABN DIV

1. MISSION

To close with the enemy by means of fire and maneuver to destroy or capture him or to repel his assault by fire, close combat, and counterattack.

2. ASSIGNMENT

Organic to airborne division, TOE 57G.

3. CAPABILITIES

a. Closes with the enemy by means of fire and maneuver to destroy or capture him.

b. Repels enemy assault by fire, close combat, and counterattack.

c. Provides a base of fire and maneuver elements.

d. Seizes and holds terrain.

e. Conducts independent operations on a limited scale.

f. Furnishes limited antitank protection.

g. Provides indirect fire support for organic and attached units.

h. Conducts long-range patrolling, when appropriately equipped.

i. Participates in air-transported (airmobile) operations, when provided sufficient transportation.

j. Maneuvers in all types of terrain and under all climatic conditions.

k. Capable of frequent airborne assault by parachute or assault aircraft with minimum marshaling and planning procedures.

4. MOBILITY

a. Thirty-percent mobile in organic transportation.

b. One hundred-percent mobile in medium transport aircraft.

TOE 7-36G HHC, INF BN, ABN DIV

1. MISSION

To provide command, staff, administration, ground surveillance, heavy mortar, reconnaissance, antitank, communications, supply, maintenance, and medical support for the infantry battalion, airborne division.

2. ASSIGNMENT

Organic to infantry battalion, airborne division, TOE 7-35G.

3. CAPABILITIES

a. Provides command, control, staff planning, and supervision of operations of organic and attached elements of the infantry battalion.

b. Provides ground radar surveillance and reconnaissance.

c. Provides antitank and heavy mortar support.

d. Provides administration, supply, and organizational maintenance support.

e. Provides centralized (battalion) or decentralized (company) messing, as required.

f. Provides communication support.

g. Provides medical service, to include emergency medical treatment and evacuation facilities, operation of the battalion aid station, and supervision of sanitation.

h. Conducts foot, mobile, motorized, airmobile, and joint airborne operations, as required.

i. Depends on the division administration company, TOE 12-157G, for personnel services and on the brigade for chaplain functions.

4. MOBILITY

a. Sixty-percent mobile in organic transportation.

b. One hundred-percent mobile in medium transport aircraft.

Figure 1–52—Continued

1. MISSION

To close with the enemy by means of fire and maneuver to destroy or capture him or to repel his assault by fire, close combat, and counterattack.

2. ASSIGNMENT

Organic to infantry battalion, airborne division, TOE 7-35G.

3. CAPABILITIES

a. Closes with the enemy by means of fire and maneuver to destroy or capture him.

b. Repels enemy assault by fire, close combat, and counterattack.

c. Provides a base of fire and maneuver.

d. Seizes and holds terrain.

e. Maneuvers in all types of terrain and under all climatic conditions.

f. Capitalizes on all forms of mobility.

g. Conducts parachute assaults.

h. Depends on HHC, infantry battalion, TOE 7-36G, for mess facilities, when centralized at battalion level, and on the division administration company, TOE 12-157G, for personnel services.

4. MOBILITY

a. Ten-percent mobile in organic transportation.

b. One hundred-percent air transportable in medium transport aircraft.

Figure 1-52—Continued

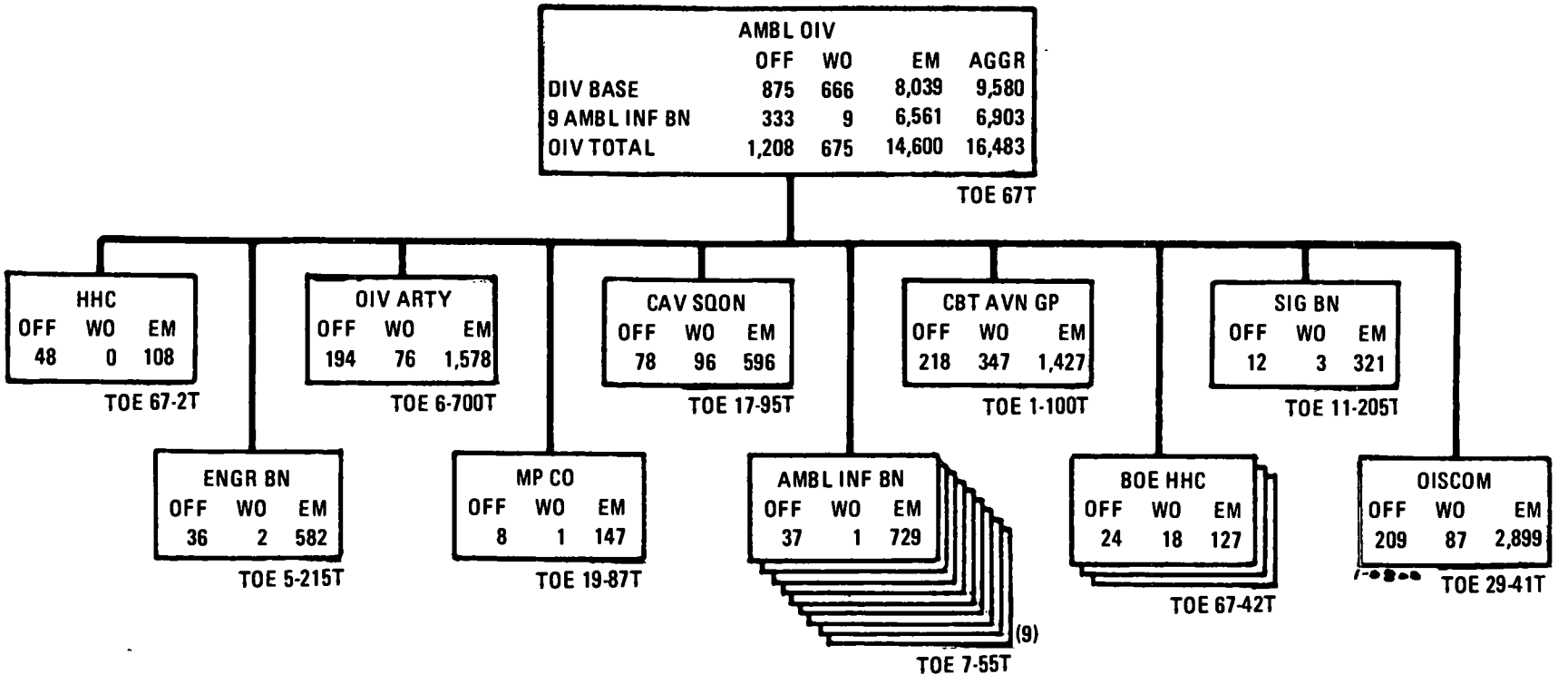

1. MISSION

To provide reconnaissance and security for larger units; to participate in stability and low- and mid-intensity operations; and to control an area, including its population and resources.

2. ASSIGNMENT

To field army, corps, or separate task force.

3. CAPABILITIES

a. Conducts operations in all types of terrain.

b. Can respond immediately and maneuver rapidly over large areas.

c. Reconnoiters; screens wide fronts; delays; and, on a selective basis, conducts raids in the enemy rear.

d. Recycles combat forces for immediate use in other areas by vertical entry and recovery of units into and from the battlefield.

e. Can be introduced into combat so that the mass and intensity of the division attack are applied promptly against the enemy, thereby changing the tempo of a single engagement, the frequency with which engagements are possible, and the range of terrain over which combat actions can be initiated.

f. Can locate and maintain contact with the enemy or maintain contact between other friendly forces and counter hostile airmobile, airborne, and irregular forces.

g. In an unsophisticated or semisophisticated environment, can project its influence rapidly by using its increased mobility and firepower to gain and maintain control over land areas.

4. MOBILITY

Mobility of units organic to this division is included in appropriate component TOE extracts.

Figure 1–53. A type of airmobile division.

1-11. A Type of Airmobile Division

Figure 1-53 shows the organizational structure and personnel strengths for a type of airmobile division found in a field army. This type of division has a division base and nine maneuver battalions. Table 1-39 provides a summary of the division's weapons and missiles, aircraft, electronics, ground support materiel, vehicles, and general equipment by class of supply. Figures 1-54 through 1-77 provide the organizational structures and personnel strengths for subordinate elements of a type of airmobile division. Tables 1-40 through 1-54 provide summaries of selected items of equipment for these subordinate elements.

Table 1-37. Summary of Equipment—Armored Cavalry Squadron, Airborne Division—Continued

1	2	3	4	5	6	7
LIN	Nomenclature	HHT (17-76G)	2 armd cav trp (17-77G)		Air cav trp (17-78G)	Sqdn total (17-75G)
			(1)	(2)		
	CLASS 2A—AIR					
1 X23227	TRANSPORTER AIRMOBILE+ HYD LIFT FOR SHELTER AND X-4 CONTAINER.	0	0	0	1	1
	CLASS 7A—AIR					
2 K30645	HELICOPTER OBSERVATION+ OH-6A	0	0	0	9	9
3 K31749	HELICOPTER UTILITY+ UH-1B	0	0	0	11	11
4 K31786	HELICOPTER UTILITY+ UH-1D	0	0	0	6	6
	CLASS 7B—GROUND SUPPORT					
5 J42685	GEN ST GAS ENG+ 0.3 KW AC 115V 16 PH 400CY DC 24 TO 35V.	6	0	0	0	6
6 J43918	GEN ST GAS ENG+ 1.5KW 60CY 1PH 2 WIRE AC 120V SHOCK.	1	0	0	1	2
7 J44055	GEN ST GAS ENG+ 1.5KW DC 28V SHOCK	4	0	0	2	6
8 J45699	GEN ST GAS ENG+ 3KW 60CY 1-3PH 120/240V 120/208V SKID SHOCK.	1	0	0	1	2
9 P96640	PUMPING ASSEMBLY FLAMMABLE LIQUID BULK TRANSFER+.	0	0	0	2	2
	CLASS 7G—ELECTRONICS					
10 Q32756	RADIO SET AN/GRC-106	4	0	0	0	4
11 Q33474	RADIO SET AN/GRC-125	5	10	20	0	25
12 Q42092	RADIO SET+ AN/URC-10	0	0	0	26	26
13 Q50421	RADIO SET AN/VRC-24	2	0	0	1	3
14 Q53001	RADIO SET AN/VRC-46	18	0	0	3	21
15 Q54154	RADIO SET AN/VRC-47	3	9	18	2	23
16 Q55114	RADIO SET AN/VRC-49	3	0	0	0	3
17 Q55510	RADIO SET AN/VRC-53	0	4	8	0	8
18 U81707	SWITCHBOARD TELEPHONE MANUAL+ SB-22/PT.	1	1	2	1	4
19 V30252	TELEPHONE SET+ TA-1/PT	1	0	0	0	1
20 V31211	TELEPHONE SET+ TA-312/PT	22	7	14	10	46
	CLASS 7K—TACTICAL VEHICLES					
21 W94030	TRAILER AMMUNITION+ 1-1/2 TON 2 WHEEL W/E.	0	0	0	6	6
22 W95400	TRAILER CARGO+ 1/4 TON 2 WHEEL W/E	18	9	18	1	37
23 W95537	TRAILER CARGO+ 3/4 TON 2 WHEEL W/E	18	3	6	6	30
24 W98825	TRAILER TANK+ WATER 400 GALLON 1-1/2 TON 2 WHEEL W/E.	4	0	0	0	4
25 X38639	TRUCK AMBULANCE+ 1/4 TON 4X4 W/E	6	0	0	0	6
26 X39735	TRUCK CARGO+ 3/4 TON 4X4 W/E	18	2	4	6	28

Table 1-37. Summary of Equipment—Armored Cavalry Squadron, Airborne Division—Continued

1	2	3	4	5	6	7
LIN	Nomenclature	HHT (17-76G)	2 armd cav trp (17-77G)		Air cav trp (17-78G)	Sqdn total (17-75G)
			(1)	(2)		
27 X39872	TRUCK CARGO+ 3/4 TON 4×4 W/WINCH W/E.	0	4	8	0	8
28 X40009	TRUCK CARGO+ 2-1/2 TON 6×6 W/E	2	0	0	0	2
29 X40146	TRUCK CARGO+ 2-1/2 TON 6×6 W/WINCH W/E.	7	0	0	6	13
30 X57271	TRUCK TAN+ FUEL SERVICING 2-1/2 TON 6×6 W/E.	0	0	0	2	2
31 X60833	TRUCK UTILITY+ 1/4 TON 4×4 W/E	26	26	52	3	81
32 X61244	TRUCK UTILITY+ 1/4 TON 4×4 CARRIER FOR 106 MM RIFLE W/E.	0	6	12	0	12
33 X63025	TRUCK WRECKER+ CRANE 2-1/2 TON 6×6 W/WINCH W/E.	1	0	0	0	1
	CLASS 7L—MISSILES					
34 A90734	ARMAMENT SUBSYSTEM HELICOPTER (SS-11)	0	0	0	4	4
	CLASS 7M—WEAPONS					
35 A90117	ARMAMENT SUBSYSTEM HELICOPTER 7.62 MILLMETER MACHINE GUN+ LIGHT.	0	0	0	6	6
36 A90154	ARMAMENT SUB-SYS HEL 7.62 MG HIGH RATE (XM-27).	0	0	0	9	9
37 A90426	ARMAMENT SUBSYS HEL 7.62MM MG 2.75 IN RKT LAUNCHER+ HIGH RATE.	0	0	0	7	7
38 A90460	ARMAMENT SUBSYSTEM HELICOPTER 40 MILLIMETER GRENADE LAUNCHER+.	0	0	0	7	7
39 L44575	LAUNCHER GRENADE+ 40 MILLIMETER	10	20	40	9	59
40 L91975	MACHINE GUN CALIBER .50+ HB FLEXIBLE FOR GROUND USE.	4	0	0	7	11
41 L92386	MACHINE GUN 7.62 MILLIMETER+ LIGHT FLEXIBLE.	0	19	38	4	42
42 M68008	MORTAR 81 MILLIMETER+ ON MOUNT	0	3	6	0	6
43 M75577	MOUNT TRIPOD MACHINE GUN+ HEAVY CALIBER 50.	4	0	0	7	11
44 M75714	MOUNT TRIPOD MACHINE GUN+ 7.62 MILLIMETER.	0	19	38	4	42
45 N96741	PISTOL CALIBER .45 AUTOMATIC+	44	28	56	15	115
46 R91244	REVOLVER CALIBER .38+ 4 INCH BARREL	0	0	0	78	78
47 R94977	RIFLE 5.56 MILLIMETER+ W/E	130	104	208	101	439
48 R96758	RIFLE RECOILLESS 106 MILLIMETER+ ON MOUNT.	0	6	12	0	12

Table 1-38. Summary of Equipment—Infantry Battalion, Airborne Division

1	2	3	4	5	6
LIN	Nomenclature	HHC (7-36G)	3 rifle co (7-37G)		Bn total (7-35G)
			(1)	(3)	
	CLASS 7B—GROUND SUPPORT				
1 E73626	COMP RTY PWR DRVN+AIR WHBRW FR 2 PNU TIRE GAS DRV 60 CMF 6.5PSI.	2	0	0	2
2 J42685	GEN ST GAS ENG+0.3KW AC 115V 1 PH 400CY DC 24 TO 35V	2	0	0	2
3 J44055	GEN ST GAS ENG+1.5KW DC 28V SHOCK	2	0	0	2
4 J45699	GEN ST GAS ENG+3KW 60CY 1-3PH 120/240V 120/208V SKID SHOCK.	1	0	0	1

Table 1-38. Summary of Equipment—Infantry Battalion, Airborne Division—Continued

1	2	3	4	5	6
LIN	Nomenclature	HHC (7-36G)	3 rifle co (7-37G)		Bn total (7-35G)
			(1)	(3)	
	CLASS 7G—ELECTRONICS				
5 Q32756	RADIO SET AN/GRC-106	1	0	0	1
6 Q33474	RADIO SET AN/GRC-125	19	2	6	25
7 Q35454	RADIO SET+AN/PRC-6	0	18	54	54
8 Q50421	RADIO SET AN/VRC-24	1	0	0	1
9 Q53001	RADIO SET AN/VRC-46	14	2	6	20
10 Q54154	RADIO SET AN/VRC-47	2	0	0	2
11 Q55114	RADIO SET AN/VRC-49	1	0	0	1
12 U81707	SWITCHBOARD TELEPHONE MANUAL+SB-22/PT	3	1	3	6
13 U82529	SWITCHBOARD TELEPHONE MANUAL+SB-993/GT	2	1	3	5
14 V30252	TELEPHONE SET+TA-1/PT	0	20	60	60
15 V31211	TELEPHONE SET+TA-312/PT	57	5	15	72
	CLASS 7K—TACTICAL VEHICLES				
16 W95400	TRAILER CARGO+1/4 TON 2 WHEEL W/E	23	2	6	29
17 W95537	TRAILER CARGO+3/4 TON 2 WHEEL W/E	14	0	0	14
18 W95811	TRAILER CARGO+1-1/2 TON 2 WHEEL W/E	4	0	0	4
19 W98825	TRAILER TANK+WATER 400 GALLON 1-1/2 TON 2 WHEEL W/E.	4	0	0	4
20 X38639	TRUCK AMBULANCE+1/4 TON 4×4 W/E	6	0	0	6
21 X39735	TRUCK CARGO+3/4 TON 4×4 W/E	13	0	0	13
22 X39872	TRUCK CARGO+3/4 TON 4×4 W/WINCH W/E	1	0	0	1
23 X40009	TRUCK CARGO+2-1/2 TON 6×6 W/E	6	0	0	6
24 X40146	TRUCK CARGO+2-1/2 TON 6×6 W/WINCH W/E	2	0	0	2
25 X55627	TRUCK PLATFORM UTILITY+1/2 TON 4×4 W/E	20	7	21	41
26 X60833	TRUCK UTILITY+1/4 TON 4×4 W/E	29	2	6	35
	CLASS 7M—WEAPONS				
27 G02341	DETECTING SET MINE+PTBL METALLIC	3	0	0	3
28 L44575	LAUNCHER GRENADE+40 MILLIMETER	16	23	69	85
29 L91975	MACHINE GUN CALIBER .50+HB FLEXIBLE FOR GROUND USE.	7	0	0	7
30 L92386	MACHINE GUN 7.62 MILLIMETER+LIGHT FLEXIBLE	6	6	18	24
31 M68008	MORTAR 81 MILLIMETER+ON MOUNT	0	3	9	9
32 M68282	MORTAR 4.2 INCH+ON MOUNT	4	0	0	4
33 M75577	MOUNT TRIPOD MACHINE GUN+HEAVY CALIBER 50	7	0	0	7
34 M75714	MOUNT TRIPOD MACHINE GUN+7.62 MILLIMETER	6	6	18	24
35 N96741	PISTOL CALIBER .45 AUTOMATIC+	74	58	174	248
36 R94977	RIFLE 5.56 MILLIMETER+ W/E	189	124	372	561
37 R96758	RIFLE RECOILLESS 106 MILLIMETER+ON MOUNT	6	2	6	12
	CLASS 7N—SPECIAL WEAPONS				
38 H68063	FLAME THROWER PORTABLE+	6	0	0	6

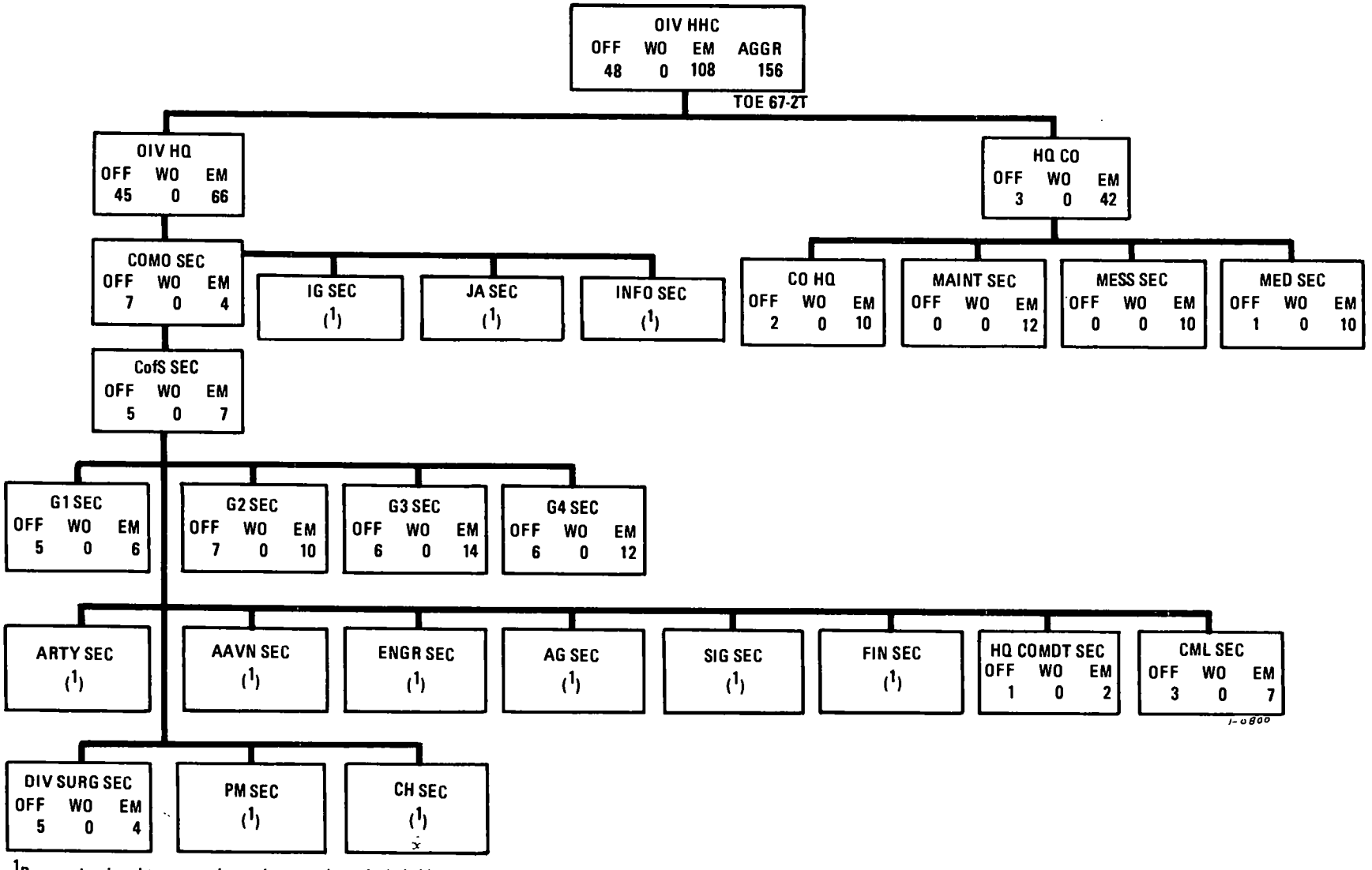

[1]Personnel assigned to appropriate unit; strength not included here.

Figure 1–54. HHC, airmobile division.

1. MISSION

a. HQ. To command, control, and supervise operations of the division and attached units.

b. HQ company. To provide personnel and administrative support for the HQ.

2. ASSIGNMENT

Organic to airmobile division, TOE 67T.

3. CAPABILITIES

a. HQ. Provides command, staff planning, control, and supervision of administration and operations of the division and attached units; operates a main CP and a rear CP; and establishes an alternate CP, when required.

b. HQ company. Provides administration, supply, organizational maintenance, mess, and unit-level medical service support for division HHC. Provides mess for the military police company.

c. Requires personnel and equipment from higher HQ to perform civil affairs functions, when required.

d. Lands by aircraft.

e. Depends on the division administration company, TOE 12-77T, for personnel administrative support.

4. MOBILITY

One hundred-percent air transportable in Army and/or USAF aircraft.

Figure 1-54—Continued

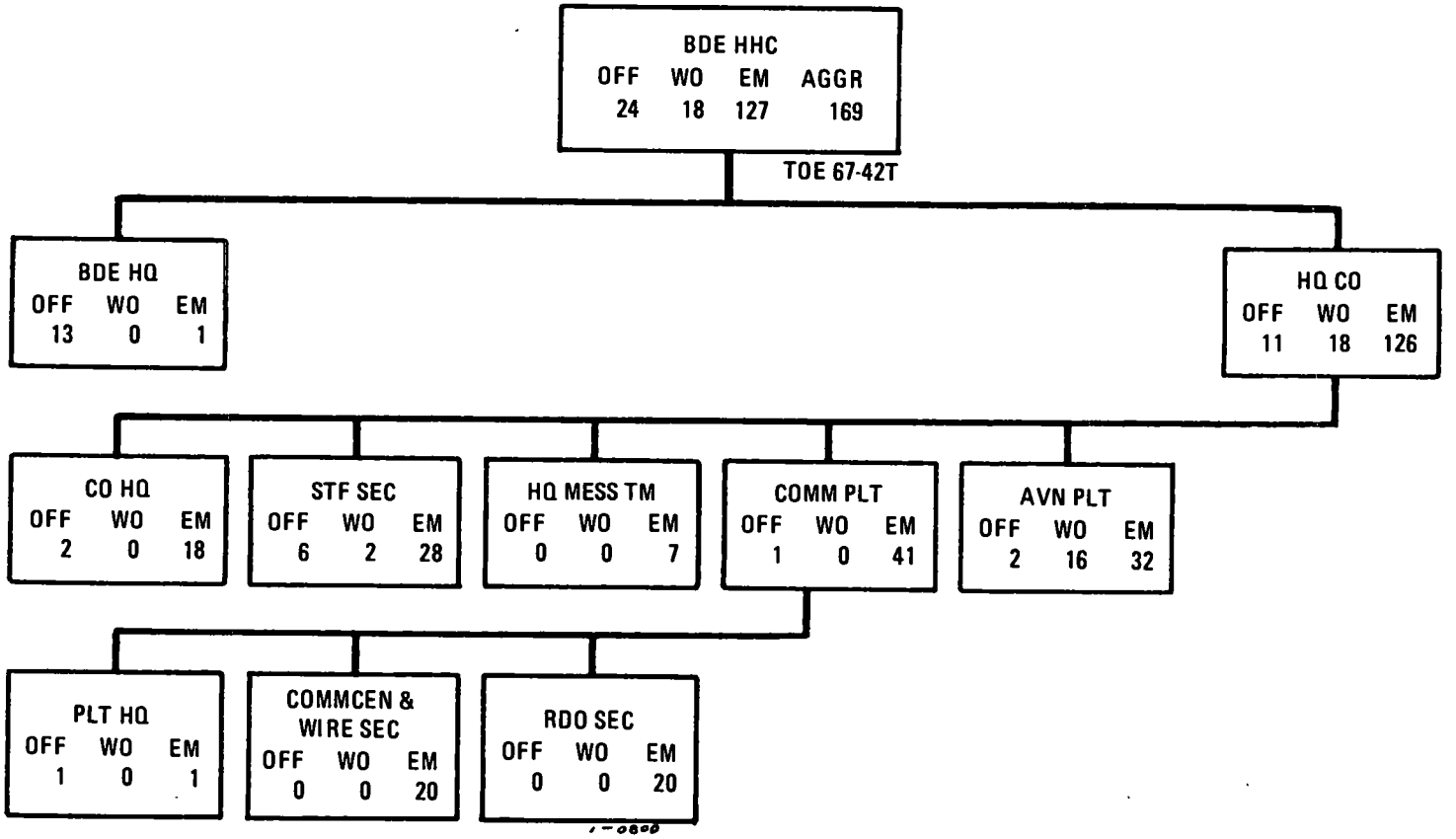

Figure 1–55. HHC, airmobile division brigade.

1. MISSION

To command and control attached combat and combat support elements in both training and combat operations.

2. ASSIGNMENT

Organic to airmobile division, TOE 67T.

3. CAPABILITIES

a. Commands attached elements of the airmobile division's combat and combat support elements in offensive and defensive combat operations.

b. Accepts and releases attached elements on short notice.

c. Provides messing facilities for elements attached to brigade HHC.

d. Conducts operations on a sustained 24-hour-a-day basis.

e. Supervises the movement and security of attached or supporting elements.

f. Establishes liaison with higher and other HQ, as required.

g. Acts as emergency successor operational HQ in the event of the destruction of division HQ.

h. Provides Army aviation for command and control of brigade HQ and attached infantry battalions.

i. Supervises tactical training of attached airmobile division elements.

j. Depends on the division administration company, TOE 12-77T, for personnel administrative support.

k. A security element for brigade HQ, when required, will be authorized by an MTOE under the provisions of AR 310-31.

4. MOBILITY

One hundred-percent air transportable in Army and/or USAF aircraft.

Figure 1–55—Continued

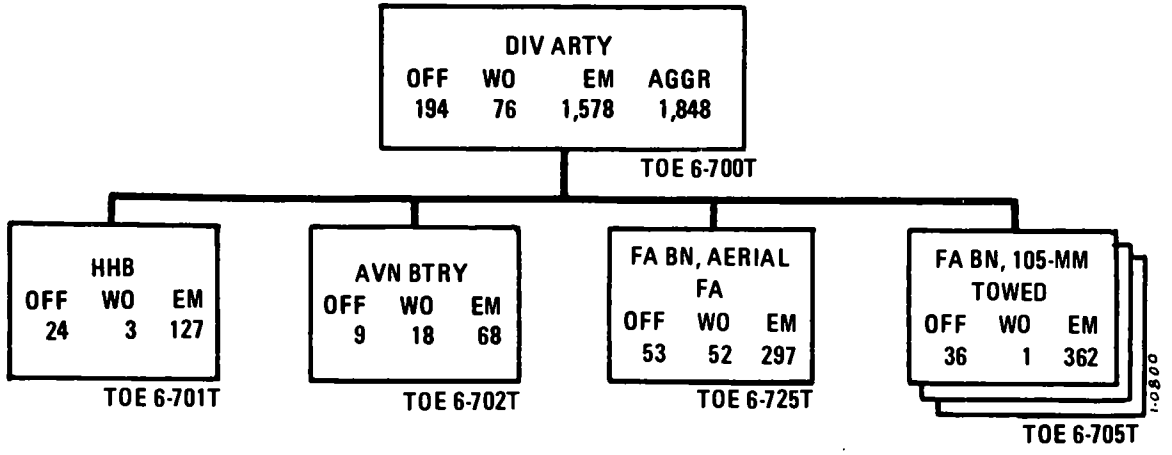

1. MISSION

To provide direct and general artillery support for the airmobile division.

2. ASSIGNMENT

Organic to airmobile division, TOE 67T.

3. CAPABILITIES

a. Provides conventional artillery support, to include communications, target acquisition, and survey.

b. Establishes the fire support element of the division tactical operations center.

c. Commands and controls additional attached field artillery units.

d. Depends on the division administration company, TOE 12-77T, for personnel administrative support.

4. MOBILITY

One hundred-percent air transportable in Army and/or USAF aircraft.

Figure 1–56. Airmobile division artillery.

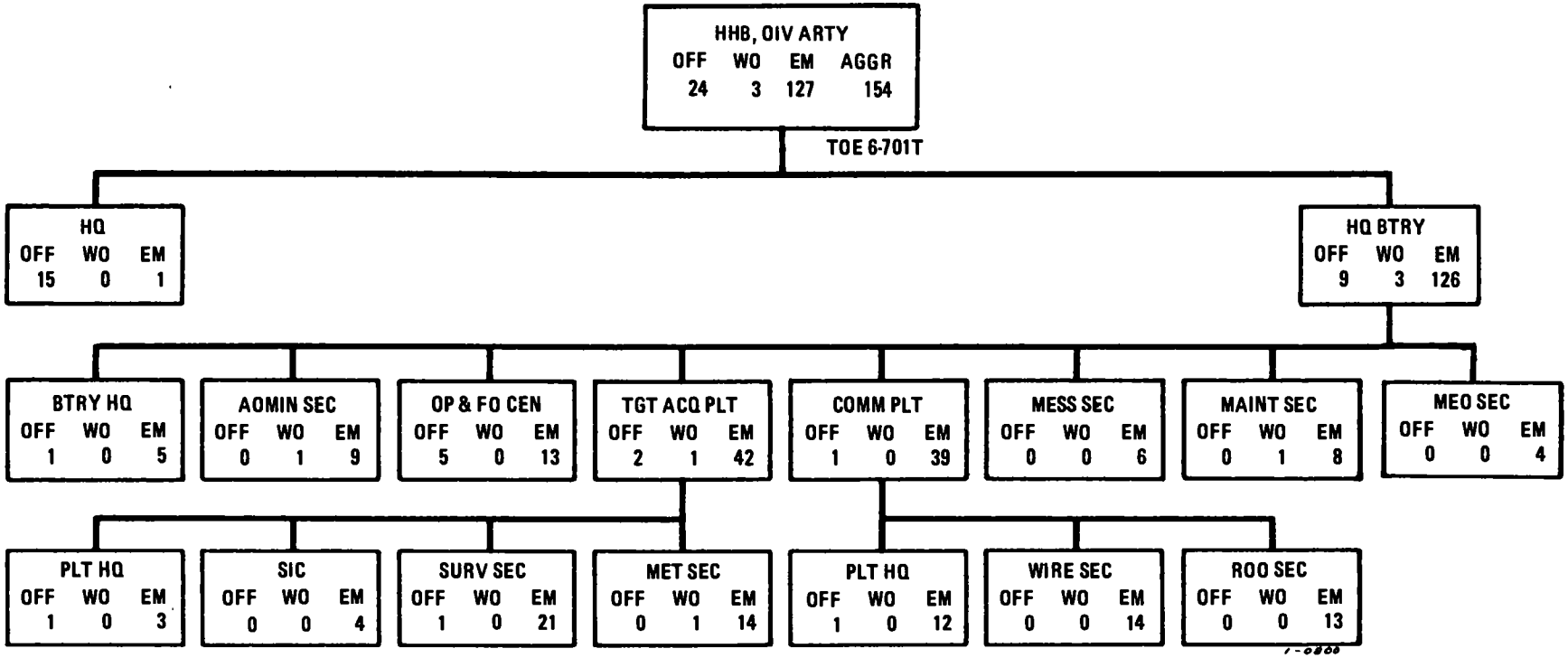

1. MISSION

To direct and coordinate operations of the airmobile division artillery and attached units and to provide facilities for the control of these units.

2. ASSIGNMENT

Organic to airmobile division artillery, TOE 6-700T.

3. CAPABILITIES

a. Provides staff planning, supervision, coordination, and control of operations and fires of organic and attached units of division artillery.

b. Provides its component of the division artillery weapon system, to include its required means for target acquisition, communications, survey, ballistic meteorology, and logistics.

c. Maintains supply records for the airmobile division artillery and coordinates and assists in the distribution of supplies and ammunition.

d. Performs battalion-level organizational maintenance on organic equipment.

e. Provides unit-level medical service, to include evacuation to HHB, airmobile division artillery, and establishment of an aid station.

f. Depends on the division administration company, TOE 12-77T, for personnel administrative support.

4. MOBILITY

One hundred-percent air transportable in Army and/or USAF aircraft.

Figure 1-57. HHB, airmobile division artillery.

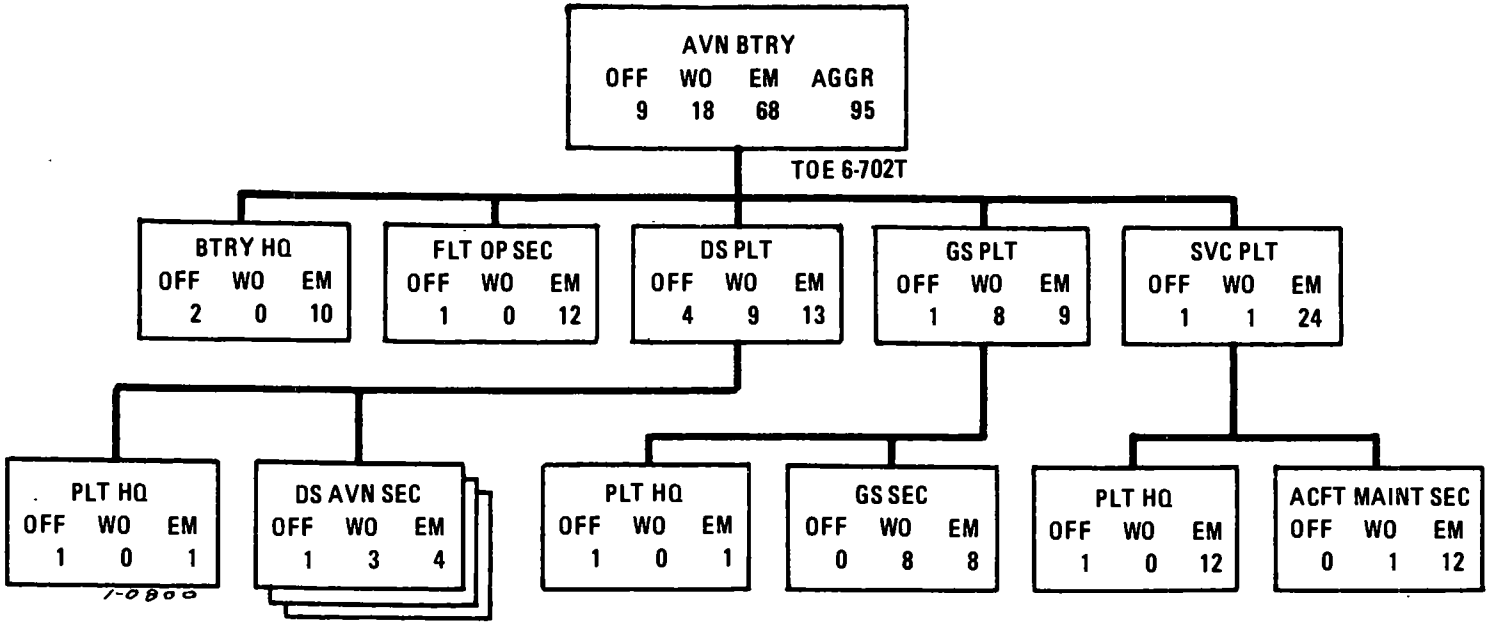

1. MISSION

To increase the combat effectiveness of the airmobile division artillery by providing its HQ and elements with immediately responsive aviation support.

2. ASSIGNMENT

Organic to airmobile division artillery, TOE 6-700T.

3. CAPABILITIES

a. Conducts continuous (day and night) operations during visual weather conditions and limited operations under instrument weather conditions.

b. Conducts air observation, surveillance, and reconnaissance, both day and night, of enemy areas to locate, verify, and evaluate targets, terrain study, and artillery fire adjustment.

c. Provides command, liaison, reconnaissance, and transportation.

d. Conducts aerial wire laying, radio relay, and propaganda leaflet dissemination.

e. Depends on the division administration company, TOE 12-77T, for personnel administration and on HHB, airmobile division artillery, TOE 6-701T, for unit-level medical support.

4. MOBILITY

One-hundred percent air transportable in Army and/or USAF aircraft.

Figure 1–58. Aviation battery, airmobile division artillery.

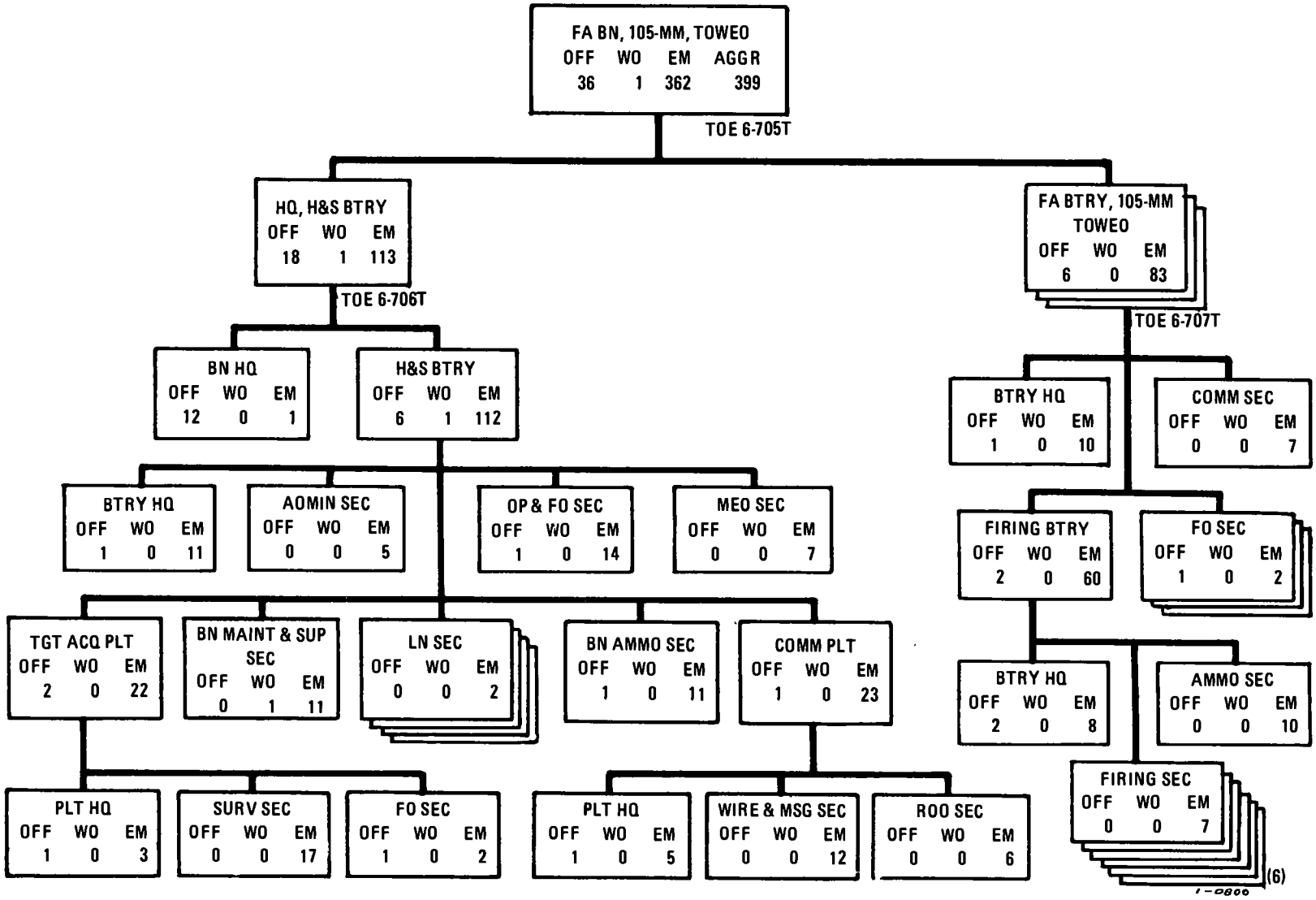

Figure 1–59. Field artillery battalion, 105-mm, towed, airmobile division.

TOE 6-705T FA BN, 105-MM, TOWED

1. MISSION

To provide direct or general artillery support, including its component of the artillery weapon system, to include target acquisition, communications, liaison, survey, and logistics; and to reinforce fires of other field artillery units.

2. ASSIGNMENT

Organic to airmobile division artillery, TOE 6-700T.

3. CAPABILITIES

a. Provides close and continuous artillery support, to include target acquisition, communications, liaison, and survey.

b. Reinforces the fires of other field artillery battalions.

c. Depends on–

(1) The division administration company, TOE 12-77T, for personnel administrative support.

(2) The use of helicopters to displace from or move to tactical field positions.

(3) Units of the combat aviation group for helicopters for delivery of supplies.

4. MOBILITY

One hundred-percent air transportable in Army and/or USAF aircraft.

TOE 6-706T HQ, H&S BTRY, FA BN, 105-MM, TOWED

1. MISSION

a. To direct and coordinate operations of the battalion and to provide facilities with which the battalion commander controls the battalion.

b. To procure, break down, and distribute all classes of supplies to units of the battalion.

2. ASSIGNMENT

Organic to field artillery battalion, 105-mm, towed, airmobile division, TOE 6-705T.

3. CAPABILITIES

a. Provides staff planning, supervision, coordination, and control of operations of organic units of the battalion.

b. Provides unit-level medical service, establishes an aid station, and furnishes aidmen to battalion units.

c. Draws and issues all classes of supplies and provides all levels of organizational maintenance for organic elements.

d. Depends on the division administration company, TOE 12-77T, for personnel administrative support.

e. Can rapidly displace from and occupy tactical locations by using helicopters provided by the airmobile division.

4. MOBILITY

One hundred-percent air transportable in Army and/or USAF aircraft.

TOE 6-707T FA BTRY, 105-MM, TOWED, FA BN, 105-MM, TOWED

1. MISSION

To provide a firing component of the 105-mm battalion, towed, and to furnish its portion of the battalion communication system.

2. ASSIGNMENT

Organic to field artillery battalion, 105-mm, towed, airmobile division, TOE 6-705T.

3. CAPABILITIES

a. Furnishes its portion of the battalion communications and fire support.

b. Depends on the division administration company, TOE 12-77T, for personnel administrative support and on the battalion HQ, H&S battery for all survey and unit-level medical service.

4. MOBILITY

One hundred-percent air transportable in Army and/or USAF aircraft.

Figure 1–59—Continued

Table 1-39. Summary of Equipment—Type of Airmobile Division

1	2	3	4	5	6	7	8	9	10	11	12	13	14	15
LIN	Nomenclature	HHC (67-2T)	MP co (19-87T)	Cbt avn gp (1-100T)	Sig bn (11-205T)	Engr bn (5-215T)	3 bde HHC (67-42T)		Cav sqdn (17-95T)	Div arty (6-700T)	DISCOM (29-41T)	9 ambl inf bn (7-55T)		Div total (67T)
							(1)	(3)				(1)	(9)	
	CLASS 2A—AIR													
1 X23227	TRANSPORTER AIRMOBILE + HYD LIFT FOR SHELTER AND X-4 CONTAINER.	0	0	70	0	0	2	6	4	11	112	0	0	203
	CLASS 2Q—GENERAL EQUIPMENT													
2 W98270	TRAILER PLATFORM WAREHOUSE + 6000 LB CAP 108L × 48W IN PNEUM.	0	0	63	0	0	0	0	0	0	6	0	0	69
3 Z13157	CARD PUNCH MACHINE + ADPE.	0	0	0	0	0	0	0	0	0	5	0	0	5
4 Z15494	COLLATOR + ADPE	0	0	0	0	0	0	0	0	0	1	0	0	1
5 Z20571	DATA TRANSCEIVER CARD UNIT + ADPE.	0	0	0	0	0	0	0	0	0	1	0	0	1
6 Z20669	DATA TRANSMISSION EQUIPMENT + ADPE.	0	0	0	0	0	0	0	0	0	1	0	0	1
7 Z35210	INTERPRETER + ADPE	0	0	0	0	0	0	0	0	0	1	0	0	1
8 Z74660	SORTER + ADPE	0	0	0	0	0	0	0	0	0	1	0	0	1
9 Z95673	VERIFIER + ADPE	0	0	0	0	0	0	0	0	0	3	0	0	3
	CLASS 7A—AIR													
10 A30221	AIRPLANE OBSERVATION STOL + OV-1B.	0	0	3	0	0	0	0	0	0	0	0	0	3
11 A30271	AIRPLANE OBSERVATION STOL + OV-1C.	0	0	3	0	0	0	0	0	0	0	0	0	3
12 K30378	HELICOPTER CARGO TRANSPORT + CH-47A.	0	0	48	0	0	0	0	0	0	0	0	0	48
13 K30645	HELICOPTER OBSERVATION + OH-6A.	0	0	19	0	0	8	24	30	16	4	0	0	93
14 K31749	HELICOPTER UTILITY + UH-1B	0	0	30	0	0	0	0	38	43	0	0	0	111
15 K31786	HELICOPTER UTILITY + UH-1D	0	0	124	0	0	5	15	20	0	17	0	0	176
	CLASS 7B—GROUND SUPPORT													
16 E68694	COMP RCP PWR DRVN + AIR REC AC 208-416V 60 CY 3 PH 15 CFM 175 PSI.	0	0	0	0	0	0	0	0	0	1	0	0	1

17	E69105	COMP RCP PWR DRVN + AIR REC GAS DRVN 5 CFM 175 PSI.	0	0	0	0	0	0	0	0	0	7	0	0	7
18	E70817	COMP RCP PWR DRVN + AIR WHL GAS DRVN 4 CFM 3000 PSI.	0	0	1	0	0	0	0	3	0	0	0	0	4
19	F39172	CRANE WHEEL MTD + 3 TON----	0	0	0	0	2	0	0	0	0	9	0	0	11
20	F43077	CRANE WHL MTD + 7 TON W/BOOM CRANE 24 FT W/BLK TKLE 9 FT.	0	0	0	0	0	0	0	0	0	1	0	0	1
21	H56391	FIRE FIGHT EQUIP SET + TRK MTD ARMY AIRCRAFT CRASH OS CL 530B.	0	0	1	0	0	0	0	0	0	0	0	0	1
22	J35835	GEN ST DSL ENG + 15KW 60CY 3PH AC 120/208 240/416V SKID.	2	0	0	0	0	0	0	0	0	5	0	0	7
23	J36109	GEN ST DSL ENG + 30KW 60CY 3PH AC 120/208 240/416V 50CY SKID.	0	0	0	0	0	0	0	0	0	1	0	0	1
24	J42959	GEN ST GAS ENG + 0.5KW 60CY 1PH AC 120V SHK.	0	0	0	0	0	0	0	0	1	0	0	0	1
25	J43233	GEN ST GAS ENG + 0.5KW 2 WIRE DC 28V SHK.	0	0	0	0	0	0	0	0	2	3	0	0	5
26	J43918	GEN ST GAS ENG + 1.5KW 60CY 1PH 2 WIRE AC 120V SHOCK.	0	1	0	0	2	0	0	7	17	14	0	0	41
27	J44055	GEN ST GAS ENG + 1.5KW DC 28V SHOCK.	0	5	5	0	0	0	0	12	22	10	0	0	54
28	J45699	GEN ST GAS ENG + 3KW 60CY 1-3PH 120/240V 120/208V SKID SHOCK.	0	0	29	10	6	7	21	0	7	21	1	9	103
29	J46178	GEN ST GAS ENG + 3KW DC 28V WHL MTD.	0	0	0	0	0	0	0	2	0	0	0	0	2
30	J47068	GEN ST GAS ENG + 5KW 60CY 1-3PH AC 120/240 120/208V SKD-SHK MTD.	0	0	12	0	5	0	0	0	1	62	0	0	80
31	J48987	GEN ST GAS ENG + 5KW DC 120V SKID.	0	0	0	0	0	0	0	0	0	2	0	0	2
32	J49055	GEN ST GAS ENG + 7.5 KW DC 28.5 V WHL MTD.	0	0	0	0	0	0	0	3	0	0	0	0	3
33	J49261	GEN ST GAS ENG + 10KW 400CY 1-3PH TO AC 120 120/208V SKD.	0	0	1	0	0	0	0	0	0	0	0	0	1
34	J74886	GRADER ROAD MOTORIZED + DSL DRVN SECTIONALIZED.	0	0	0	0	6	0	0	0	0	0	0	0	6
35	J75239	SCRAPER EARTH MOVING GRADERMOUNTING + HYD OPRTD.	0	0	0	0	4	0	0	0	0	0	0	0	4
36	L76693	LOADER SCOOP TYPE + SEC 2-1/2 CU YD.	0	0	0	0	2	0	0	0	0	0	0	0	2
37	P90610	PUMP CENTRF + GAS DRVN BASE MTD 1-1/2 IN 100 GPM.	0	0	64	0	0	0	0	0	0	44	0	0	108

Table 1-39. Summary of Equipment—Type of Airmobile Division—Continued

1 LIN	2 Nomenclature	3 HHC (67-2T)	4 MP co (19-87T)	5 Cbt avn gp (1-100T)	6 Sig bn (11-205T)	7 Engr bn (5-215T)	8 3 bde HHC (67-42T) (1)	9 3 bde HHC (67-42T) (3)	10 Cav sqdn (17-95T)	11 Div arty (6-700T)	12 DISCOM (29-41T)	13 9 ambl inf bn (7-55T) (1)	14 9 ambl inf bn (7-55T) (9)	15 Div total (67T)
38 P96640	PUMPING ASSEMBLY FLAMMABLE LIQUID BULK TRANSFER +.	0	0	19	0	0	0	0	0	0	0	0	0	19
39 S10657	ROLLER AIR MOBILE + SINGLE DRUM.	0	0	0	0	3	0	0	0	0	0	0	0	3
40 S10682	ROLLER AIR MOBILITY + VIBRATING.	0	0	0	0	3	0	0	0	0	0	0	0	3
41 S11684	ROLLER MOTORIZED PNEU TIRED + AIR MOBILE 9 WHEEL.	0	0	0	0	2	0	0	0	0	0	0	0	2
42 S12575	ROLLER TOWED SHEEPSFOOT + 2 DP.	0	0	0	0	2	0	0	0	0	0	0	0	2
43 S56119	SCRAPER EARTH MOVING TOWED + 8 CU YD.	0	0	0	0	4	0	0	0	0	0	0	0	4
44 W76268	TRACTOR FULL TRCKD LOW SPD + MED DSP SECTNLZED AIR TRNSPTBL W/ATT.	0	0	0	0	4	0	0	0	0	0	0	0	4
45 W76302	TRACTOR AIR MOBILE + W/ BACKHOE AND FRONT LOADER 1/2 CU YD.	0	0	0	0	3	0	0	0	0	0	0	0	3
46 W76336	TRACTOR AIR MOBILE + W/BLADE.	0	0	0	0	6	0	0	0	0	0	0	0	6
47 W89557	TRACTOR WHEELED WAREHOUSE + GAS 4000 LB.	0	0	0	0	0	0	0	0	0	2	0	0	2
48 X48846	TRUCK LIFT FORK AIRMBLE + MULTIFUEL 4000 LB CAP ROUGH TERRAIN.	0	0	0	0	0	0	0	0	0	1	0	0	1
40 X49051	TRUCK LIFT FORK + DSL DRVN 10000 LB CAP ROUGH TERRAIN.	0	0	0	0	0	0	0	0	0	1	0	0	1
50 X52818	TRUCK LIFT FORK + ROUGH TERRAIN 3000 LB.	1	0	1	0	1	0	0	0	0	34	0	0	37
51 Y35143	WATER PURIF EQUIP SET + DIATOMITE FILTER 420 GPH.	0	0	1	0	0	0	0	0	0	0	0	0	1
52 Y36239	WATER PURIF SET + PTBL 600 GPH.	0	0	0	0	5	0	0	0	0	0	0	0	5
	CLASS 7G—ELECTRONICS													
53 Q16109	RADAR SET + AN/PPS-5 LESS POWER.	0	0	0	0	0	2	6	0	0	0	0	0	6

54	Q32756	RADIO SET AN/GRC-106	0	0	4	0	0	0	0	5	0	0	1	9	18
55	Q33474	RADIO SET AN/GRC-125	0	10	0	0	0	0	0	18	9	0	9	81	118
56	Q35454	RADIO SET + AN/PRC-6	0	14	0	0	0	0	0	0	0	0	60	540	554
57	Q42092	RADIO SET + AN/URC-10	0	0	233	0	0	13	39	87	59	21	0	0	439
58	Q50421	RADIO SET AN/VRC-24	0	0	14	2	0	2	6	4	6	10	1	9	51
59	Q53001	RADIO SET AN/VRC-46	12	11	65	10	13	6	18	26	42	52	1	9	258
60	Q54154	RADIO SET AN/VRC-47	4	5	37	2	8	2	6	9	27	33	0	0	131
61	Q55114	RADIO SET AN/VRC-49	1	0	8	7	3	4	12	18	24	2	1	9	84
62	U81707	SWITCHBOARD TELEPHONE MANUAL SB-22/PT.	0	1	20	10	2	4	12	6	14	19	3	27	111
63	U82255	SWITCHBOARD TELEPHONE MANUAL + SB-86/P.	0	0	1	0	0	0	0	0	0	0	0	0	1
64	U82529	SWITCHBOARD TELEPHONE MANUAL + SB-993/GT.	0	0	0	0	12	0	0	0	0	1	6	54	67
65	V30252	TELEPHONE SET + TA-1/PT	0	0	8	0	0	6	18	24	68	0	45	405	523
66	V31211	TELEPHONE SET + TA-312/PT	5	6	196	214	37	28	84	29	298	224	54	486	1579
67	V41968	TELETYPEWRITER SET + AN/GGC-3.	0	0	2	0	0	1	3	0	0	0	0	0	5
68	V42105	TELETYPEWRITER SET + AN/PGC-1.	0	0	1	0	0	1	3	0	2	0	0	0	6
		CLASS 7K—TACTICAL VEHICLES													
69	E02807	CHASSIS TRAILER + GENERATOR 2-1/2 TON 2 WHEEL W/E.	2	0	0	0	0	0	0	0	0	5	0	0	7
70	G34815	DOLLY SET LIFT TRANSPORTABLE SHELTER + 5-1/4 TON W/E.	0	0	3	0	3	0	0	1	0	51	0	0	58
71	S72024	SEMITRAILER STAKE + 12 TON 4 WHEEL W/E.	0	0	0	0	0	0	0	0	0	1	0	0	1
72	S74490	SEMITRAILER VAN + EXPANSIBLE 6 TON 4 WHEEL W/E.	0	0	0	0	0	0	0	0	0	4	0	0	4
73	W93961	TRAILER AIRCRAFT CARGO LOADING-UNLOADING + 3-1/2 TON 4 WHEEL W/E.	0	0	0	0	0	0	0	0	0	43	0	0	43
74	W94441	TRAILER BASIC UTILITY + 2-1/2 TON 2 SINGLE WHEELS W/E.	0	0	0	0	2	0	0	0	0	0	0	0	2
75	W95400	TRAILER CARGO + 1/4 TON 2 WHEEL W/E.	16	13	60	56	33	16	48	29	90	113	9	81	539
76	W95537	TRAILER CARGO + 3/4 TON 2 WHEEL W/E.	10	4	117	6	15	7	21	33	34	93	2	18	351
77	W95811	TRAILER CARGO + 1-1/2 TON 2 WHEEL W/E.	2	0	31	0	3	0	0	6	7	27	0	0	76
78	W97866	TRAILER OXYGEN SERVICING + 3 WHL.	0	0	1	0	0	0	0	0	0	0	0	0	1
79	W98619	TRAILER STAKE + PLATFORM UTILITY 3/4 TON 4 WHEEL W/E.	0	0	0	0	0	0	0	0	4	0	0	0	4

Table 1-39. Summary of Equipment—Type of Airmobile Division—Continued

1 LIN	2 Nomenclature	3 HHC (67-2T)	4 MP co (19-87T)	5 Cbt avn gp (1-100T)	6 Sig bn (11-205T)	7 Engr bn (5-215T)	8 3 bde HHC (67-42T) (1)	9 (3)	10 Cav sqdn (17-95T)	11 Div arty (6-700T)	12 DISCOM (29-41T)	13 9 ambl inf bn (7-55T) (1)	14 (9)	15 Div total (67T)
80 W98825	TRAILER TANK + WATER 400 GALLON 1-1/2 TON 2 WHEEL W/E.	1	0	4	1	1	0	0	5	9	5	0	0	26
81 X38639	TRUCK AMBULANCE + 1/4 TON 4×4 W/E.	0	0	3	0	1	0	0	2	1	12	0	0	19
82 X39735	TRUCK CARGO + 3/4 TON 4×4 W/E.	12	4	117	0	13	2	6	3	34	70	0	0	259
83 X39872	TRUCK CARGO + 3/4 TON 4×4 W/WINCH W/E.	0	0	5	7	0	6	18	33	36	30	2	18	147
84 X40009	TRUCK CARGO + 2-1/2 TON 6×6 W/E.	2	0	31	0	0	0	0	0	16	41	0	0	90
85 X40146	TRUCK CARGO + 2-1/2 TON 6×6 W/WINCH W/E.	1	0	7	0	0	0	0	11	0	10	0	0	29
86 X40420	TRUCK CARGO + 2-1/2 TON 6×6 XLWB W/WINCH W/E.	0	0	0	0	1	0	0	0	0	0	0	0	1
87 X43228	TRUCK DUMP + 3/4 TON 4×4 W/E.	0	0	0	0	42	0	0	0	0	0	0	0	42
88 X43297	TRUCK DUMP + 2-1/2 TON 6×6 W/E.	0	0	0	0	15	0	0	0	0	0	0	0	15
89 X55627	TRUCK PLATFORM UTILITY + 1/2 TON 4×4 W/E.	0	3	24	0	0	6	18	10	26	77	19	171	329
90 X57408	TRUCK TANK + FUEL SERVICING 2-1/2 TON 6×6 W/WINCH W/E.	0	0	14	0	0	1	3	4	4	5	0	0	30
91 X59326	TRUCK TRACTOR + 5 TON 6×6 W/E.	0	0	0	0	0	0	0	0	0	1	0	0	1
92 X60833	TRUCK UTILITY + 1/4 TON 4×4 W/E.	20	26	92	75	33	17	51	47	90	113	5	45	592
93 X61244	TRUCK UTILITY + 1/4 TON 4×4 CARRIER FOR 106 MM RIFLE W/E.	0	0	0	0	0	0	0	6	0	0	8	72	78
94 X63094	TRUCK WRECKER + 3/4 TON 4×4 W/E.	0	0	0	0	1	0	0	0	0	5	0	0	6
95 X63162	TRUCK WRECKER + 2-1/2 TON 6×6 W/WINCH W/E.	0	0	0	0	0	0	0	1	0	2	0	0	3
96 Z90492	TRAILER FLAT BED + 12 TON TILT BED TRI-AXLE.	0	0	0	0	8	0	0	0	0	0	0	0	8
	CLASS 7L—MISSILES													
97 A90597	ARMAMENT SUBSYSTEM HELICOPTER 2.75 INCH ROCKET LAUNCHER +.	0	0	0	0	0	0	0	0	36	0	0	0	36

98	A90117	ARMAMENT SUBSYSTEM HELICOPTER 7.62 MILLIMETER MACHINE GUN + LIGHT.	0	0	124	0	0	5	15	50	0	5	0	0	194
99	A90122	ARMAMENT SUBSYSTEM HELICOPTER 7.62MM MACHINE GUN + DOOR MTD L W.	0	0	48	0	0	0	0	0	0	0	0	0	48
100	A90154	ARMAMENT SUBSYSTEM HELICOPTER 7.62MM MACHINE GUN + HIGH RATE.	0	0	19	0	0	8	24	0	16	4	0	0	63
101	A90391	ARMAMENT SUBSYSTEM HELICOPTER 7.62MM MG 2.75 IN ROCKET LAUNCHER +.	0	0	30	0	0	0	0	0	7	0	0	0	37
102	A90426	ARMAMENT SUBSYS HEL 7.62 MM MG 2.75 IN RKT LAUNCHER + HIGH RATE.	0	0	0	0	0	0	0	38	0	0	0	0	38
103	A90734	ARMAMENT SUBSYSTEM HELICOPTER (SS–11).	0	0	0	0	0	0	0	0	12	0	0	0	12
104	G02204	DETECTING SET MINE + PTBL METALLIC AND NONMETALLIC.	0	0	0	0	29	0	0	0	0	0	0	0	29
105	G02341	DETECTING SET MINE + PTBL METALLIC.	0	0	0	0	29	0	0	4	15	0	3	27	75
106	G02478	DETECTING SET MINE TRUCK MOUNTED +.	0	0	0	0	1	0	0	0	0	0	0	0	1
107	K57392	HOWITZER LIGHT TOWED + 105 MILLIMETER.	0	0	0	0	0	0	0	0	54	0	0	0	54
108	L44575	LAUNCHER GRENADE + 40 MILLIMETER.	0	13	70	31	32	15	45	215	42	109	86	774	1331
109	L45260	LAUNCHER ROCKET + 3.5 INCH.	0	0	2	0	0	0	0	0	0	35	0	0	37
110	L91975	MACHINE GUN CALIBER .50 + HB FLEXIBLE FOR GROUND USE.	0	0	0	0	0	0	0	0	0	4	0	0	4
111	L92386	MACHINE GUN 7.62 MILLIMETER + LIGHT FLEXIBLE.	2	8	50	2	38	6	18	37	106	80	20	180	521
112	M68008	MORTAR 81 MILLIMETER + ON MOUNT.	0	0	0	0	0	0	0	3	0	0	13	117	120
113	M75577	MOUNT TRIPOD MACHINE GUN + HEAVY CALIBER .50.	0	0	0	0	0	0	0	0	0	4	0	0	4
114	M75714	MOUNT TRIPOD MACHINE GUN + 7.62 MILLIMETER.	2	8	2	2	38	6	18	27	0	80	20	180	357
115	N96741	PISTOL CALIBER .45 AUTOMATIC +.	43	121	103	39	83	42	126	307	180	193	235	2115	3310
116	R91107	REVOLVER CALIBER .38 + 2 INCH BARREL.	0	2	0	0	0	0	0	0	0	0	0	0	2
117	R91244	REVOLVER CALIBER .38 + 4 INCH BARREL.	0	0	807	0	0	32	96	193	154	118	0	0	1368
118	R94977	RIFLE 5.56 MILLIMETER + W/E..	112	111	1079	297	536	135	405	270	1512	2849	532	4788	11959

Table 1-39. Summary of Equipment—Type of Airmobile Division—Continued

1 LIN	2 Nomenclature	3 HHC (67-2T)	4 MP co (19-87T)	5 Cbt avn gp (1-100T)	6 Sig bn (11-205T)	7 Engr bn (5-215T)	8 3 bde HHC (67-42T) (1)	9 3 bde HHC (67-42T) (3)	10 Cav sqdn (17-95T)	11 Div arty (6-700T)	12 DISCOM (29-41T)	13 9 ambl inf bn (7-55T) (1)	14 9 ambl inf bn (7-55T) (9)	15 Div total (67T)
119 R96484	RIFLE RECOILLESS 90 MILLIMETER+.	0	4	0	0	0	0	0	0	0	0	18	162	166
120 R96758	RIFLE RECOILLESS 106 MILLIMETER+ ON MOUNT.	0	0	0	0	0	0	0	6	0	0	8	72	78
	CLASS 7N—SPECIAL WEAPONS													
121 H68063	FLAMETHROWER PORTABLE+--	0	0	0	0	0	1	3	0	0	0	9	81	84
	CLASS 7Q—GENERAL EQUIPMENT													
122 B84404	BOAT RECONNAISSANCE+ PNEUMATIC 3 MAN.	0	0	0	0	2	0	0	0	0	0	0	0	2
123 H48568	FILTER METER MODULE+ WITH FLOW DIVIDERS AND HOSE ASSEMBLIES.	0	0	0	0	0	0	0	0	0	44	0	0	44
124 J04716	FUEL SYSTEM SUPPLY POINT+ PORTABLE 6000 GAL CAP.	0	0	0	0	0	0	0	0	0	2	0	0	2
125 M66293	MONITOR LIQUID FUEL CONTAMINATION+ 50 GPM.	0	0	2	0	0	0	0	0	0	5	0	0	7
126 M66303	MONITOR LIQUID FUEL CONTAMINATION+ 400 GPM.	0	0	12	0	0	0	0	0	0	0	0	0	12
127 T10138	SHOP EQUIP CONTACT MAINT TRK MTD+.	0	0	0	0	3	0	0	0	0	1	0	0	4
128 V12141	TANK AND PUMP UNIT LIQUID DISPENSING TRUCK-MOUNTING.	0	0	0	0	0	0	0	0	7	2	0	0	9
129 V19950	TANK UNIT LIQUID DISPENSING TRAILER MOUNTING.	0	0	0	0	0	0	0	0	0	2	0	0	2

Table 1-40. Summary of Equipment—Airmobile Division Artillery

1	2	3	4	5	6	7	8
LIN	Nomenclature	HHB (6-701T)	Avn btry (6-702T)	3 FA bn 105-mm, towed (6-705T) (1)	(3)	FA bn aerial FA (6-725T)	Div arty total (6-700T)
	CLASS 2A—AIR						
1 X23227	TRANSPORTER AIRMOBILE+ HYD LIFT FOR SHELTER AND X-4 CONTAINER.	0	2	0	0	9	11
	CLASS 7A—AIR						
2 K30645	HELICOPTER OBSERVATION+ OH-6A	0	16	0	0	0	16
3 K31749	HELICOPTER UTILITY+ UH-1B	0	4	0	0	39	43
	CLASS 7B—GROUND SUPPORT						
4 J42959	GEN ST GAS ENG+ 0.5KW 60CY 1PH AC 120V SHK.	0	0	0	0	1	1
5 J43233	GEN ST GAS ENG+ 0.5KW 2 WIRE DC 28V SHK.	0	0	0	0	2	2
6 J43918	GEN ST GAS ENG+ 1.5KW 60CY 1PH 2 WIRE AC 120V SHOCK.	1	1	4	12	3	17
7 J44055	GEN ST GAS ENG+ 1.5KW DC 28V SHOCK.	1	0	6	18	3	22
8 J45699	GEN ST GAS ENG+ 3KW 60CY 1-3PH 120/240V 120/208V SKID SHOCK.	4	0	1	3	0	7
9 J47068	GEN ST GAS ENG+ 5KW 60CY 1-3PH AC 120/240 120/208V SKD-SHK MTD.	1	0	0	0	0	1
	CLASS 7G—ELECTRONICS						
10 Q33474	RADIO SET AN/GRC-125	3	0	1	3	3	9
11 Q42092	RADIO SET+ AN/URC-10	0	20	0	0	39	59
12 Q50421	RADIO SET AN/VRC-24	1	1	0	0	4	6
13 Q53001	RADIO SET AN/VRC-46	3	3	10	30	6	42
14 Q54154	RADIO SET AN/VRC-47	2	2	6	18	5	27
15 Q55114	RADIO SET AN/VRC-49	4	0	6	18	2	24
16 U81707	SWITCHBOARD TELEPHONE MANUAL+ SB-22/PT.	2	1	2	6	5	14
17 V30252	TELEPHONE SET+ TA-1/PT	5	3	18	54	6	68
18 V31211	TELEPHONE SET+ TA-312/PT	29	10	74	222	37	298
19 V42105	TELETYPEWRITER SET+ AN/PGC-1	2	0	0	0	0	2
	CLASS 7K—TACTICAL VEHICLES						
20 W95400	TRAILER CARGO+ 1/4 TON 2 WHEEL W/E.	14	4	20	60	12	90
21 W95537	TRAILER CARGO+ 3/4 TON 2 WHEEL W/E.	4	7	2	6	17	34
22 W95811	TRAILER CARGO+ 1-1/2 TON 2 WHEEL W/E.	0	0	1	3	4	7
23 W98619	TRAILER STAKE+ PLATFORM UTILITY 3/4 TON 4 WHEEL W/E.	4	0	0	0	0	4
24 W98825	TRAILER TANK+ WATER 400 GALLON 1-1/2 TON 2 WHEEL W/E.	1	1	1	3	4	9
25 X38639	TRUCK AMBULANCE+ 1/4 TON 4×4 W/E.	0	0	0	0	1	1
26 X39735	TRUCK CARGO+ 3/4 TON 4×4 W/E	5	4	2	6	19	34
27 X39872	TRUCK CARGO+ 3/4 TON 4×4 W/ WINCH W/E.	1	3	9	27	5	36

Table 1-40. Summary of Equipment—Airmobile Division Artillery—Continued

1	2	3	4	5	6	7	8
LIN	Nomenclature	HHB (6-701T)	Avn btry (6-702T)	3 FA bn 105-mm, towed (6-705T) (1)	3 FA bn 105-mm, towed (6-705T) (3)	FA bn aerial FA (6-725T)	Div arty total (6-700T)
X40009	TRUCK CARGO+ 2-1/2 TON 6×6 W/E.	1	1	2	6	8	16
X57408	TRUCK TANK+ FUEL SERVICING 2-1/2 TON 6×6 W/WINCH W/E.	0	1	0	0	3	4
X60833	TRUCK UTILITY+ 1/4 TON 4×4 W/E.	14	4	20	60	12	90
	CLASS 7L—MISSILES						
A90597	ARMAMENT SUBSYSTEM HELICOPTER 2.75 INCH ROCKET LAUNCHER+.	0	0	0	0	36	36
A90734	ARMAMENT SUBSYSTEM HELICOPTER (SS-11).	0	0	0	0	12	12
	CLASS 7M—WEAPONS						
A90154	ARMAMENT SUBSYSTEM HELICOPTER 7.62MM MACHINE GUN+ HIGH RATE.	0	16	0	0	0	16
A90391	ARMAMENT SUBSYSTEM HELICOPTER 7.62MM MG 2.75 IN. ROCKET LAUNCHER+.	0	4	0	0	3	7
G02341	DETECTING SET MINE+ PTBL METALLIC.	1	1	4	12	1	15
K57392	HOWITZER LIGHT TOWED+ 105 MILLIMETER.	0	0	18	54	0	54
L44575	LAUNCHER GRENADE+ 40 MILLIMETER.	3	3	12	36	0	42
L92386	MACHINE GUN 7.62 MILLIMETER+ LIGHT FLEXIBLE.	8	3	24	72	23	106
N96741	PISTOL CALIBER .45 AUTOMATIC+---	28	10	36	108	34	180
R91244	REVOLVER CALIBER .38+ 4 INCH BARREL.	0	40	0	0	114	154
R94977	RIFLE 5.56 MILLIMETER+ W/E-------	124	45	363	1089	254	1512
	CLASS 7Q—GENERAL EQUIPMENT						
V12141	TANK AND PUMP UNIT LIQUID DISPENSING TRUCKMOUNTING+	0	0	0	0	7	7

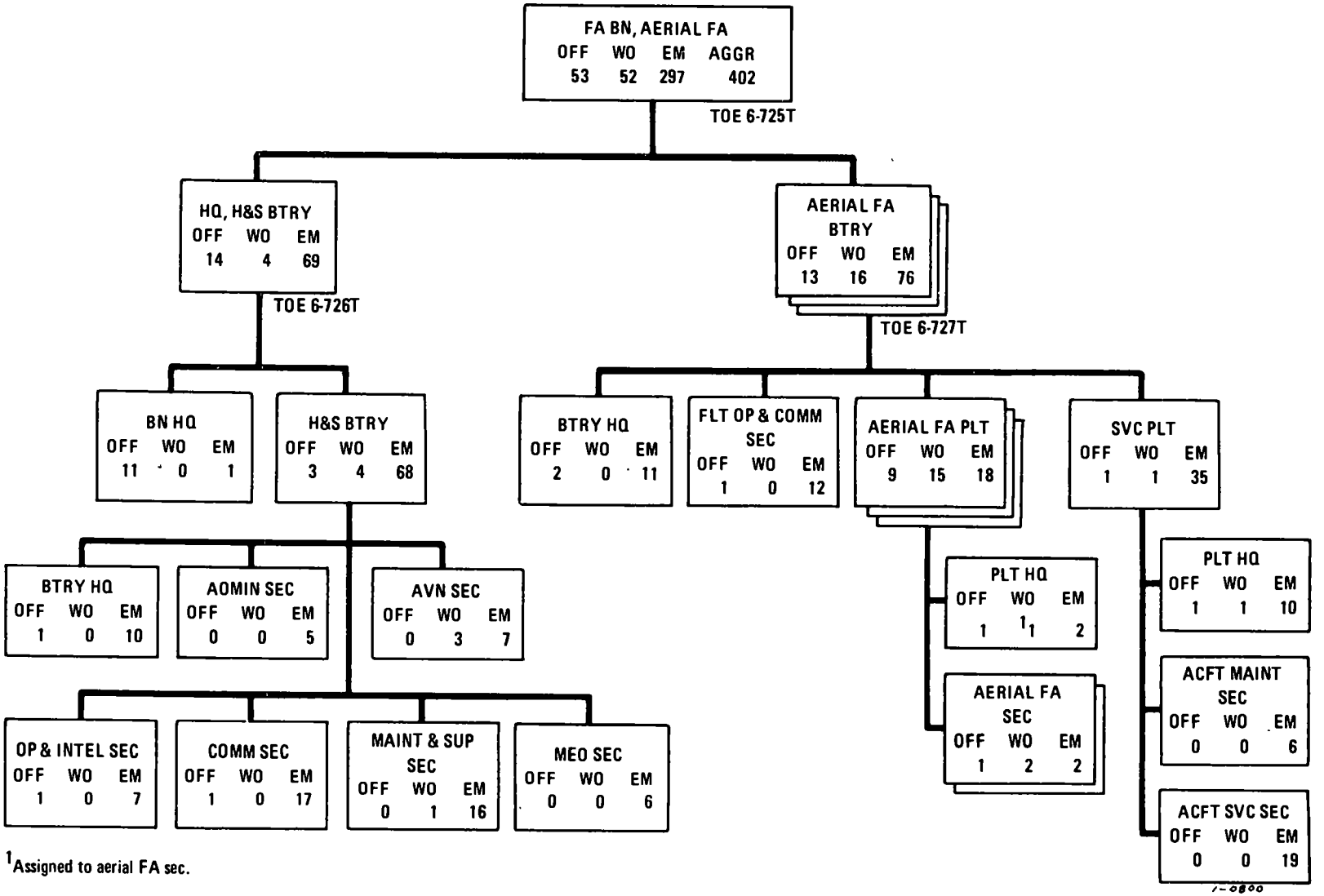

[1]Assigned to aerial FA sec.

Figure 1–60. Field artillery battalion, aerial field artillery, airmobile division.

TOE 6-725T FA BN, AERIAL FA

1. MISSION

To provide aerially mounted rocket direct fire support to the assault units of the airmobile division.

2. ASSIGNMENT

Organic to airmobile division artillery, TOE 6-700T.

3. CAPABILITIES

a. Provides highly mobile direct fire support unit with aerially mounted rocket launchers.

b. Elements of the battalion may be detached and placed in support of specific ground units.

c. May be employed as a battalion or as individual batteries.

d. Provides aerially mounted antitank capability.

e. Depends on the division administration company, TOE 12-77T, for personnel administrative support.

4. MOBILITY

One hundred-percent air transportable in Army and/or USAF aircraft.

TOE 6-726T HQ, H&S BTRY, FA BN, AERIAL FA

1. MISSION

a. To direct and coordinate operations of the battalion and to provide facilities with which the battalion commander controls the battalion.

b. To procure, break down, and distribute all classes of supplies to units of the battalion.

2. ASSIGNMENT

Organic to field artillery battalion, aerial field artillery, airmobile division, TOE 6-725T.

3. CAPABILITIES

a. Provides staff planning, supervision, coordination, and control of organic units of the battalion.

b. Provides unit-level medical service, establishes an aid station, and furnishes aidmen to battalion units.

c. Provides personnel to supervise supply and maintenance for the batteries.

d. Operates a central aircraft communication and control facility for the battalion.

e. Draws and issues all classes of supply and provides battalion-level organizational maintenance for organic elements.

f. Depends on the division administration company, TOE 12-77T, for personnel administrative support.

4. MOBILITY

One hundred-percent air transportable in Army and/or USAF aircraft.

TOE 6-727T AERIAL FA BTRY, FA BN, AERIAL FA

1. MISSION

To provide aerially mounted rocket direct fire support and to furnish its portion of the battalion communication system.

2. ASSIGNMENT

Organic to field artillery battalion, aerial field artillery, airmobile division, TOE 6-725T.

3. CAPABILITIES

a. Provides aerially mounted rocket fire support.

b. Conducts semi-independent operations.

c. Provides aerially mounted antitank capability.

d. Depends on the division administration company, TOE 12-77T, for personnel administrative support.

4. MOBILITY

One hundred-percent air transportable in Army and/or USAF aircraft.

Figure 1-60—Continued

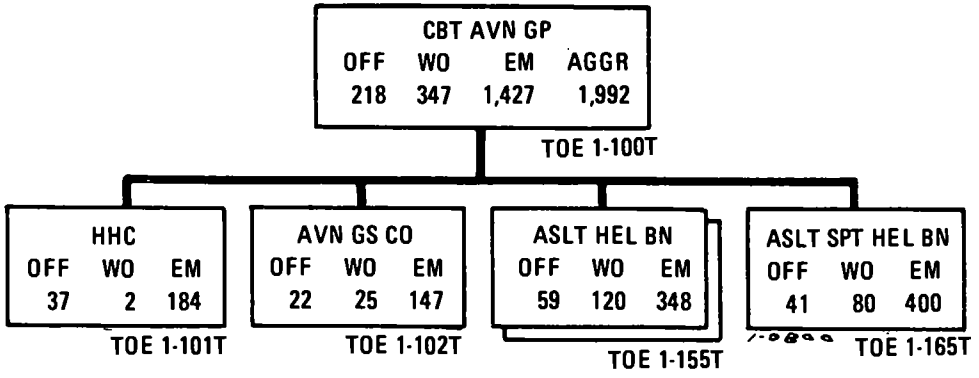

1. MISSION

To provide aviation support to the division and aviation special staff personnel to division HQ.

2. ASSIGNMENT

Organic to airmobile division, TOE 67T.

3. CAPABILITIES

a. Provides command and control, performs staff planning, and supervises subordinate and attached units.

b. Provides aviation special staff personnel for division HQ.

c. Provides limited aerial battlefield surveillance to acquire information on the enemy and terrain and performs target acquisition.

d. At normal aircraft availability (CH-47–60 percent and UH-1–80 percent), airlifts simultaneously the assault elements of two airmobile infantry battalions and three 105-mm howitzer batteries, or any combination thereof.

e. Conducts continuous (day and night) operations during visual weather conditions and limited operations under instrument flight conditions.

f. Airlifts supplies, equipment, and troops of units of the division.

g. Provides aircraft to support division HQ, DISCOM, and other units without organic aircraft.

h. Provides aircraft for general support and reinforcement of units with organic aircraft.

i. Augments aeromedical capability of the medical battalion by providing air transportation for nonemergency-type patients at the request of the appropriate command surgeon.

j. Provides pathfinder support for the division.

k. Provides armed aerial escort for the division.

l. Depends on–

(1) The division administration company, TOE 12-77T, for personnel administrative support.

(2) Division HHC for unit-level medical service.

(3) The DISCOM for normal logistic support, to include continuous aviation direct support maintenance and supply of aviation fuel.

(4) Augmentation of attached or supporting aviation units of corps or field army for nondivisional Army aviation support.

(5) USAF strategic cargo/transport aircraft for air movement to an area of operations.

(6) Transport by ship when speed is not a requirement for strategic deployment or when airlift is not available.

4. MOBILITY

One hundred-percent air transportable in Army and/or USAF aircraft.

Figure 1–61. Combat aviation group, airmobile division.

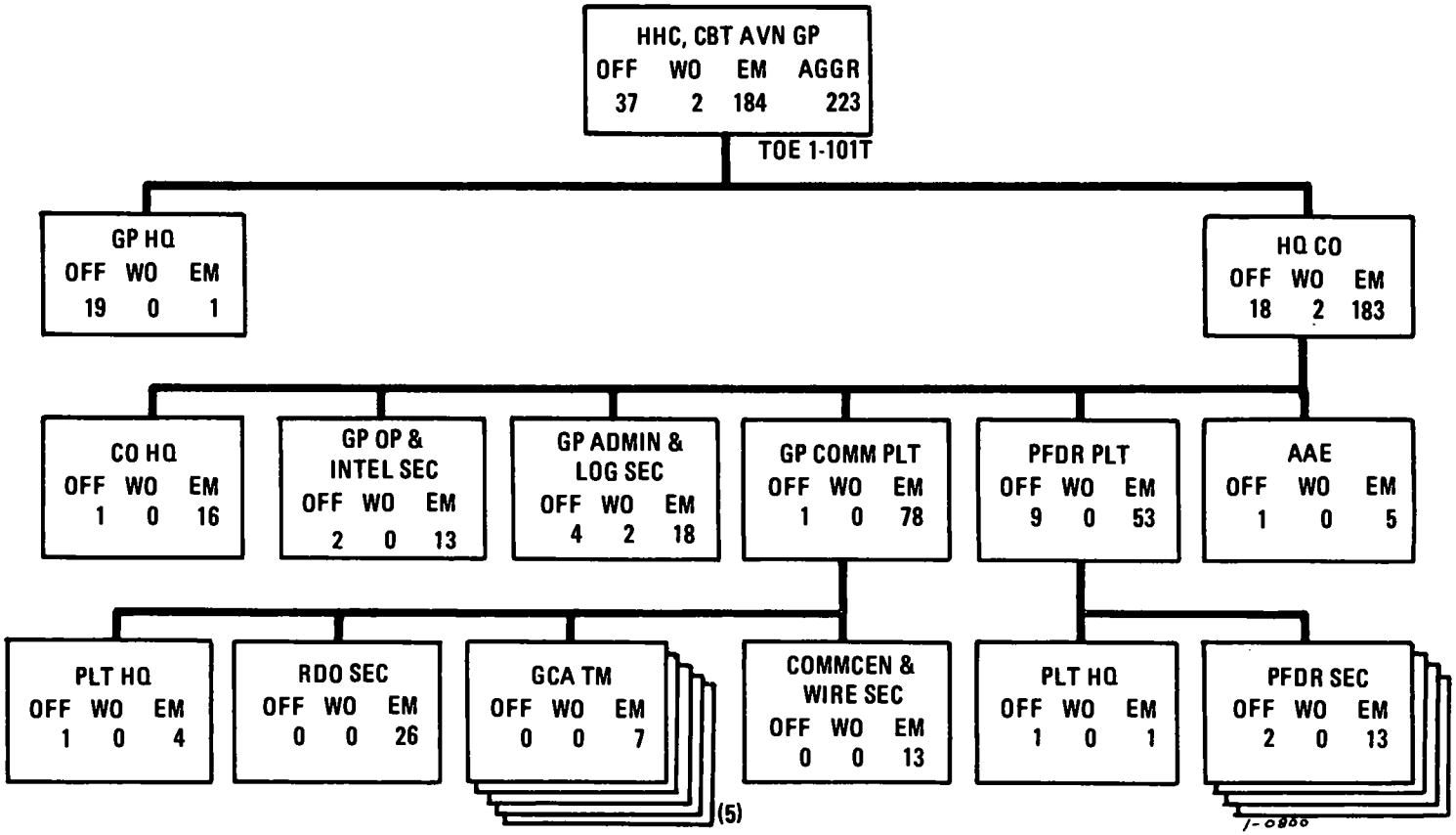

Figure 1–62. HHC, combat aviation group, airmobile division.

1. MISSION

a. To furnish command, control, communications, and supply for the combat aviation group.

b. To provide aviation special staff personnel for the airmobile division HQ.

2. ASSIGNMENT

Organic to combat aviation group, airmobile division, TOE 1-100T.

3. CAPABILITIES

a. Provides command and control, performs staff planning, furnishes communications, and supervises operations of subordinate units of the combat aviation group and attached units.

b. Provides aviation special staff personnel for combat aviation group HQ; division aviation officer's section; and, when operating, the Army aviation element of the division tactical operations center.

c. Provides personnel to supervise supply, maintenance, and administration for organic and attached units.

d. Provides pathfinder support to the elements of the division through the pathfinder sections.

e. Provides ground controlled approach teams for the division.

f. Depends on the division administration company, TOE 12-77T, for personnel administrative support and on HHC, airmobile division, TOE 67-2T, for unit-level medical service.

4. MOBILITY

One hundred-percent air transportable in Army and/or USAF aircraft.

Figure 1-62—Continued

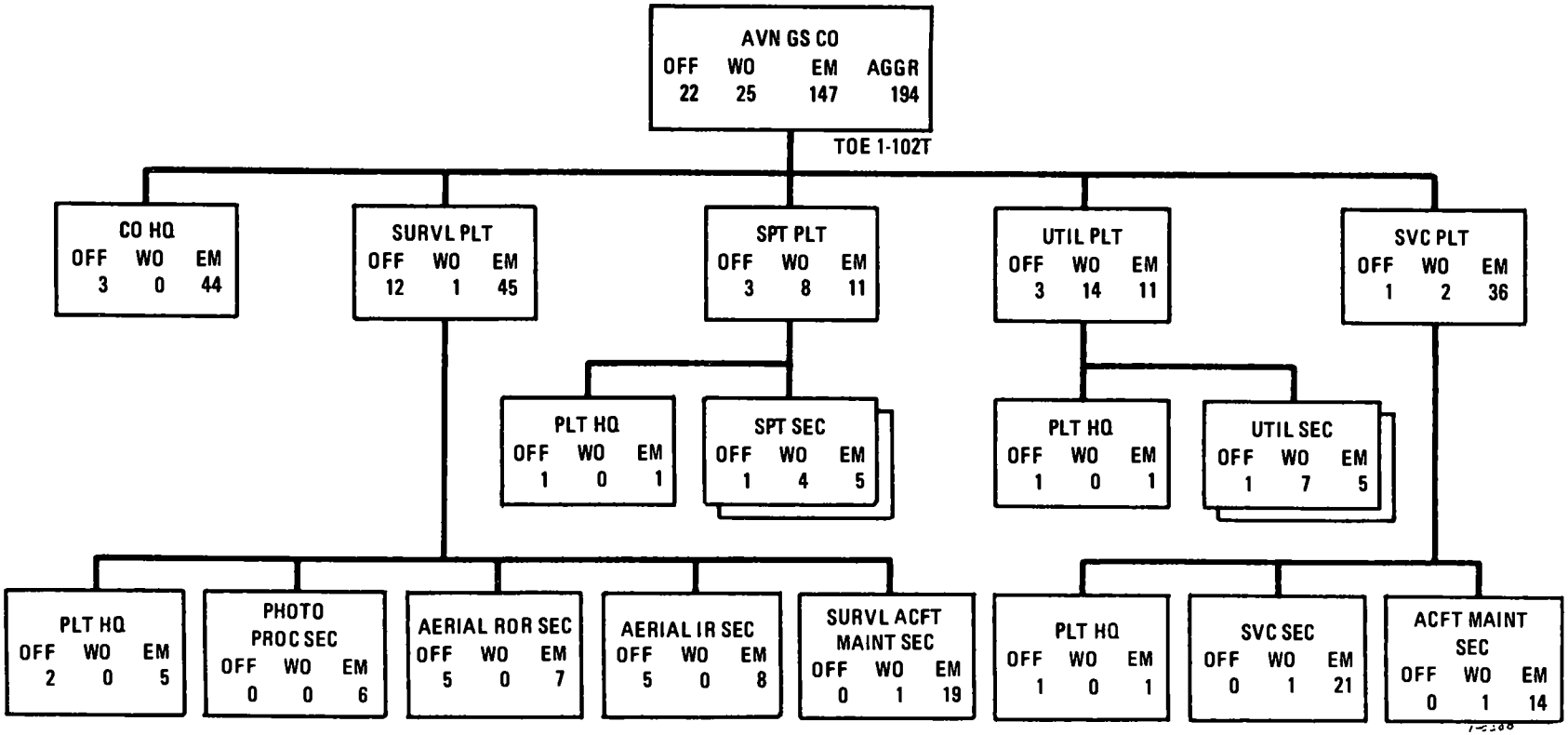

Figure 1–63. Aviation general support company, combat aviation group, airmobile division.

1. MISSION

To provide aviation support for division HQ, combat aviation group HQ, DISCOM, and other units without organic aircraft; to furnish electronic surveillance; and to acquire combat intelligence and target information for the airmobile division.

2. ASSIGNMENT

Organic to combat aviation group, airmobile division, TOE 1-100T.

3. CAPABILITIES

a. Provides air observation, reconnaissance, and surveillance by visual, radar, infrared, and visual photographic means of enemy areas to locate, verify, and evaluate targets, terrain study, and fire adjustment.

b. Provides day and night operations during visual weather conditions and limited operations under instrument weather conditions.

c. Provides aircraft for aerial CP control, liaison, reconnaissance, and radio relay for the division.

d. Augments aeromedical evacuation units by transporting non-emergency-type patients at the request of the appropriate command surgeon.

e. Provides rapid airphotography, consisting of daylight vertical and oblique photography and night vertical photography.

f. Provides battlefield illumination and local small area smokescreens for combat elements of the division.

g. Depends on –

(1) The division administration company, TOE 12-77T, for personnel administrative support.

(2) HHC, airmobile division, TOE 67-2T, and units to which elements are attached for medical support.

(3) HHC, military intelligence battalion, aerial reconnaissance support, field army, TOE 30-6G, for processing surveillance information received by the ground stations through the data line systems, combat signal support, and intelligence support.

4. MOBILITY

One hundred-percent air transportable in Army and/or USAF aircraft.

Figure 1–63—Continued

Table 1-41. Summary of Equipment—Field Artillery Battalion, 105-mm, Towed, Airmobile Division

1	2	3	4	5	6
LIN	Nomenclature	HQ, H&S btry (6-706T)	3 FA btry 105-mm, towed (6-707T) (1)	(3)	Bn total (6-705T)
	CLASS 7B—GROUND SUPPORT				
1 J43918	GEN ST GAS ENG+ 1.5KW 60CY 1PH 2 WIRE AC 120V SHOCK.	1	1	3	4
2 J44055	GEN ST GAS ENG+ 1.5KW DC 28V SHOCK	3	1	3	6
3 J45699	GEN ST GAS ENG+ 3KW 60CY 1-3PH 120/240V 120/208V SKID SHOCK.	1	0	0	1
	CLASS 7G—ELECTRONICS				
4 Q33474	RADIO SET AN/GRC-125	1	0	0	1
5 Q53001	RADIO SET AN/VRC-46	4	2	6	10
6 Q54154	RADIO SET AN/VRC-47	3	1	3	6
7 Q55114	RADIO SET AN/VRC-49	6	0	0	6
8 U81707	SWITCHBOARD TELEPHONE MANUAL+ SB-22/PT	2	0	0	2
9 V30252	TELEPHONE SET+ TA-1/PT	6	4	12	18
10 V31211	TELEPHONE SET+ TA-312/PT	29	15	45	74
	CLASS 7K—TACTICAL VEHICLES				
11 W95400	TRAILER CARGO+ 1/4 TON 2 WHEEL W/E	14	2	6	20
12 W95537	TRAILER CARGO+ 3/4 TON 2 WHEEL W/E	2	0	0	2
13 W95811	TRAILER CARGO+ 1-1/2 TON 2 WHEEL W/E	1	0	0	1
14 W98825	TRAILER TANK+ WATER 400 GALLON 1-1/2 TON 2 WHEEL W/E.	1	0	0	1
15 X39735	TRUCK CARGO+ 3/4 TON 4×4 W/E	2	0	0	2
16 X39872	TRUCK CARGO+ 3/4 TON 4×4 W/WINCH W/E	9	0	0	9
17 X40009	TRUCK CARGO+ 2-1/2 TON 6×6 W/E	2	0	0	2
18 X55627	TRUCK PLATFORM UTILITY+ 1/2 TON 4×4 W/E	3	1	3	6
19 X60833	TRUCK UTILITY+ 1/4 TON 4×4 W/E	14	2	6	20
	CLASS 7M—WEAPONS				
20 G02341	DETECTING SET MINE+ PTBL METALLIC	1	1	3	4
21 K57392	HOWITZER LIGHT TOWED+ 105 MILLIMETER	0	6	18	18
22 L44575	LAUNCHER GRENADE+ 40 MILLIMETER	3	3	9	12
23 L92386	MACHINE GUN 7.62 MILLIMETER+ LIGHT FLEXIBLE	6	6	18	24
24 N96741	PISTOL CALIBER .45 AUTOMATIC+	24	4	12	36
25 R94977	RIFLE 5.56 MILLIMETER+ W/E	108	85	255	368

Table 1-42. Summary of Equipment—Field Artillery Battalion, Aerial Field Artillery, Airmobile Division

1	2	3	4	5	6
LIN	Nomenclature	HQ, H&S btry (6-726T)	3 aerial FA btry (6-727T) (1)	(3)	Bn total (6-725T)
	CLASS 2A—AIR				
1 X23227	TRANSPORTER AIRMOBILE+HYD LIFT FOR SHELTER AND X-4 CONTAINER.	3	2	6	9
	CLASS 7A—AIR				
2 K31749	HELICOPTER UTILITY+UH-1B	3	12	36	39

Table 1-42. Summary of Equipment—Field Artillery Battalion, Aerial Field Artillery, Airmobile Division—Continued

1	2	3	4	5	6
LIN	Nomenclature	HQ, H&S btry (6-726T)	3 aerial FA btry (6-727T)		Bn total (6-725T)
			(1)	(3)	
	CLASS 7B—GROUND SUPPORT				
3 J42959	GEN ST GAS ENG+0.5KW 60CY 1PH AC 120V SHK	1	0	0	1
4 J43233	GEN ST GAS ENG+0.5KW 2 WIRE DC 28V SHK	2	0	0	2
5 J43918	GEN ST GAS ENG+1.5KW 60CY 1PH 2 WIRE AC 120V SHOCK	0	1	3	3
6 J44055	GEN ST GAS ENG+1.5KW DC 28V SHOCK	0	1	3	3
	CLASS 7G—ELECTRONICS				
7 Q33474	RADIO SET AN/GRC-125	0	1	3	3
8 Q42092	RADIO SET+AN/URC-10	3	12	36	39
9 Q50421	RADIO SET AN/VRC-24	1	1	3	4
10 Q53001	RADIO SET AN/VRC-46	0	2	6	6
11 Q54154	RADIO SET AN/VRC-47	2	1	3	5
12 Q55114	RADIO SET AN/VRC-49	2	0	0	2
13 U81707	SWITCHBOARD TELEPHONE MANUAL+SB-22/PT	2	1	3	5
14 V30252	TELEPHONE SET+TA-1/PT	0	2	6	6
15 V31211	TELEPHONE SET+TA-312/PT	13	8	24	37
	CLASS 7K—TACTICAL VEHICLES				
16 W95400	TRAILER CARGO+1/4 TON 2 WHEEL W/E	3	3	9	12
17 W95537	TRAILER CARGO+3/4 TON 2 WHEEL W/E	5	4	12	17
18 W95811	TRAILER CARGO+1-1/2 TON 2 WHEEL W/E	1	1	3	4
19 W98825	TRAILER TANK+WATER 400 GALLON 1-1/2 TON 2 WHEEL W/E.	1	1	3	4
20 X38639	TRUCK AMBULANCE+1/4 TON 4×4 W/E	1	0	0	1
21 X39735	TRUCK CARGO+3/4 TON 4×4 W/E	4	5	15	19
22 X39872	TRUCK CARGO+ 3/4 TON 4×4 W/WINCH W/E	2	1	3	5
23 X40009	TRUCK CARGO+ 2-1/2 TON 6×6 W/E	2	2	6	8
24 X57408	TRUCK TANK+ FUEL SERVICING 2-1/2 TON 6×6 W/ WINCH W/E.	0	1	3	3
25 X60833	TRUCK UTILITY+ 1/4 TON 4×4 W/E	3	3	9	12
	CLASS 7L—MISSILES				
26 A90597	ARMAMENT SUBSYSTEM HELICOPTER 2.75 INCH ROCKET LAUNCHER+.	0	12	36	36
27 A90734	ARMAMENT SUBSYSTEM HELICOPTER (SS-11)	0	4	12	12
	CLASS 7M—WEAPONS				
28 A90391	ARMAMENT SUBSYSTEM HELICOPTER 7.62MM MG 2.75 IN ROCKET LAUNCHER+.	3	0	0	3
29 G02341	DETECTING SET MINE+PTBL METALLIC	1	0	0	1
30 L92386	MACHINE GUN 7.62 MILLIMETER+ LIGHT FLEXIBLE	2	7	21	23
31 N96741	PISTOL CALIBER .45 AUTOMATIC+	19	5	15	34
32 R91244	REVOLVER CALIBER .38+ 4 INCH BARREL	6	36	108	114
33 R94977	RIFLE 5.56 MILLIMETER+ W/E	62	64	192	254
	CLASS 7Q—GENERAL EQUIPMENT				
34 V12141	TANK AND PUMP UNIT LIQUID DISPENSING TRUCK-MOUNTING+.	1	2	6	7

Table 1-43. Summary of Equipment—Combat Aviation Group, Airmobile Division

1	2	3	4	5	6	7	8
LIN	Nomenclature	HHC (1-101T)	Avn GS co (1-102T)	2 aslt hel bn (1-155T)		Aslt spt hel bn (1-165T)	Gp total (1-100T)
				(1)	(2)		
	CLASS 2A—AIR						
1 X23227	TRANSPORTER AIRMOBILE+ HYD LIFT FOR SHELTER AND X-4 CONTAINER.	0	13	25	50	7	70
	CLASS 2Q—GENERAL EQUIPMENT						
2 W98270	TRAILER PLATFORM WAREHOUSE+ 6000 LB CAP 108L×48W IN PNEUM.	0	0	0	0	63	63
	CLASS 7A—AIR						
3 A30221	AIRPLANE OVSERVATION STOL+ OV-1B.	0	3	0	0	0	3
4 A30271	AIRPLANE OBSERVATION STOL+ OV-1C.	0	3	0	0	0	3
5 K30378	HELICOPTER CARGO TRANSPORT+ CH-47A.	0	0	0	0	48	48
6 K30645	HELICOPTER OBSERVATION+ OH-6A.	0	10	3	6	3	19
7 K31749	HELICOPTER UTILITY+ UH-1B	0	6	12	24	0	30
8 K31786	HELICOPTER UTILITY+ UH-1D	0	4	60	120	0	124
	CLASS 7B—GROUND SUPPORT						
9 E70817	COMP PCP PWR DRVN+ AIR WHL GAS DRVN 4 CFM 3000 PSI.	0	1	0	0	0	1
10 H56391	FIRE FIGHT EQUIP SET+ TRK MTD ARMY AIRCRAFT CRASH OS CL 530B.	0	1	0	0	0	1
11 J44055	GEN ST GAS ENG+ 1.5KW DC 28V SHOCK.	5	0	0	0	0	5
12 J45699	GEN ST GAS ENG+ 3KW 60CY 1-3PH 120/240V 120/208V SKID SHOCK.	1	6	7	14	8	29
13 J47068	GEN ST GAS ENG+ 5KW 60CY 1-3PH AC 120/240 120/208V SKD-SHK MTD.	12	0	0	0	0	12
14 J49261	GEN ST GAS ENG+ 10KW 400CY 1-3PH TO AC 120 120/208V SKD.	0	1	0	0	0	1
15 P90610	PUMP CENTRF+ GAS DRVN BASE MTD 1-1/2 IN 100 GPM.	0	4	0	0	60	64
16 P96640	PUMPING ASSEMBLY FLAMMABLE LIQUID BULK TRANSFER+.	0	3	8	16	0	19
17 X52818	TRUCK LIFT FORK+ ROUGH TERRAIN 3000 LB.	0	1	0	0	0	1
18 Y35143	WATER PURIF EQUIP SET+ DIATOMITE FILTER 420 GPH.	0	0	0	0	1	1
	CLASS 7G—ELECTRONICS						
19 Q32756	RADIO SET AN/GRC-106	0	0	0	0	4	4
20 Q42092	RADIO SET+ AN/URC-10	0	32	75	150	51	233
21 Q50421	RADIO SET AN/VRC-24	1	2	4	8	3	14
22 Q53001	RADIO SET AN/VRC-46	22	2	15	30	11	65
23 Q54154	RADIO SET AN/VRC-47	4	4	8	16	13	37

Table 1-43. Summary of Equipment—Combat Aviation Group, Airmobile Division—Continued

1	2	3	4	5	6	7	8
LIN	Nomenclature	HHC (1-101T)	Avn GS co (1-102T)	2 aslt hel bn (1-155T) (1)	2 aslt hel bn (1-155T) (2)	Aslt spt hel bn (1-165T)	Gp total (1-100T)
24 Q55114	RADIO SET AN/VRC-49	3	0	1	2	3	8
25 U81707	SWITCHBOARD TELEPHONE MANUAL+ SB-22/PT.	1	2	6	12	5	20
26 U82255	SWITCHBOARD TELEPHONE MANUAL+ SB-86/P.	1	0	0	0	0	1
27 V30252	TELEPHONE SET+ TA-1/PT	8	0	0	0	0	8
28 V31211	TELEPHONE SET+ TA-312/PT	55	14	48	96	31	196
29 V41968	TELETYPEWRITER SET+ AN/GGC-3.	2	0	0	0	0	2
30 V42105	TELETYPEWRITER SET+ AN/PGC-1.	1	0	0	0	0	1
	CLASS 7K—TACTICAL VEHICLES						
31 G34815	DOLLY SET LIFT TRANSPORTABLE SHELTER+ 5-1/4 TON W/E.	0	0	1	2	1	3
32 W95400	TRAILER CARGO+ 1/4 TON 2 WHEEL W/E.	17	7	18	36	0	60
33 W95537	TRAILER CARGO+ 3/4 TON 2 WHEEL W/E.	21	10	43	86	0	117
34 W95811	TRAILER CARGO+ 1-1/2 TON 2 WHEEL W/E.	0	9	11	22	0	31
35 W97866	TRAILER OXYGEN SERVICING+ 3 WHL.	0	1	0	0	0	1
36 W98825	TRAILER TANK+ WATER 400 GALLON 1-1/2 TON 2 WHEEL W/E.	1	1	1	2	0	4
37 X38639	TRUCK AMBULANCE+ 1/4 TON 4×4 W/E.	0	0	1	2	1	3
38 X39735	TRUCK CARGO+ 3/4 TON 4×4 W/E	17	9	43	86	5	117
39 X39872	TRUCK CARGO+ 3/4 TON 4×4 W/WINCH W/E.	4	1	0	0	0	5
40 X40009	TRUCK CARGO+ 2-1/2 TON 6×6 W/E.	0	6	12	24	1	31
41 X40146	TRUCK CARGO+ 2-1/2 TON 6×6 W/WINCH W/E.	2	2	0	0	3	7
42 X55627	TRUCK PLATFORM UTILITY+ 1/2 TON 4×4 W/E.	0	0	12	24	0	24
43 X57408	TRUCK TANK+ FUEL SERVICING 2-1/2 TON 6×6 W/WINCH W/E.	0	4	4	8	2	14
44 X60833	TRUCK UTILITY+ 1/4 TON 4×4 W/E.	17	7	20	40	28	92
	CLASS 7M—WEAPONS						
45 A90117	ARMAMENT SUBSYSTEM HELICOPTER 7.62 MILLIMETER MACHINE GUN+ LIGHT.	0	4	60	120	0	124
46 A90122	ARMAMENT SUBSYSTEM HELICOPTER 7.62MM MACHINE GUN+ DOOR MTD L W.	0	0	0	0	48	48
47 A90154	ARMAMENT SUBSYSTEM HELICOPTER 7.62MM MACHINE GUN+ HIGH RATE.	0	10	3	6	3	19
48 A90391	ARMAMENT SUBSYSTEM HELICOPTER 7.62MM MG 2.75 IN ROCKET LAUNCHER+.	0	6	12	24	0	30
49 L44575	LAUNCHER GRENADE+ 40 MILLIMETER.	2	3	24	48	17	70

Table 1-43. Summary of Equipment—Combat Aviation Group, Airmobile Division—Continued

1 LIN	2 Nomenclature	3 HHC (1-101T)	4 Avn GS co (1-102T)	5 2 asslt hel bn (1-155T) (1)	6 2 asslt hel bn (1-155T) (2)	7 Asslt spt hel bn (1-165T)	8 Gp total (1-100T)
50 L45260	LAUNCHER ROCKET+ 3.5 INCH	2	0	0	0	0	2
51 L92386	MACHINE GUN 7.62 MILLIMETER+ LIGHT FLEXIBLE.	2	0	0	0	48	50
52 M75714	MOUNT TRIPOD MACHINE GUN+ 7.62 MILLIMETER.	2	0	0	0	0	2
53 N96741	PISTOL CALIBER .45 AUTOMATIC+	6	5	33	66	26	103
54 R91244	REVOLVER CALIBER .38+ 4 INCH BARREL.	19	74	251	502	212	807
55 R94977	RIFLE 5.56 MILLIMETER+ W/E	195	115	243	486	283	1079
	CLASS 7Q—GENERAL EQUIPMENT						
56 M66293	MONITOR LIQUID FUEL CONTAMINATION+ 50 GPM.	0	2	0	0	0	2
57 M66303	MONITOR LIQUID FUEL CONTAMINATION+ 400 GRM.	0	0	6	12	0	12

Table 1-44. Summary of Equipment—Assault Helicopter Battalion, Combat Aviation Group, Airmobile Division

1 LIN	2 Nomenclature	3 HHC (1-156T)	4 Atk hel co (1-157T)	5 3 asslt hel co (1-158T) (1)	6 3 asslt hel co (1-158T) (3)	7 Bn total (1-155T)
	CLASS 2A—AIR					
1 X23227	TRANSPORTER AIRMOBILE+ HYD LIFT FOR SHELTER AND X-4 CONTAINER.	1	3	7	21	25
	CLASS 7A—AIR					
2 K30645	HELICOPTER OBSERVATION+ OH-6A	3	0	0	0	3
3 K31749	HELICOPTER UTILITY+ UH-1B	0	12	0	0	12
4 K31786	HELICOPTER UTILITY+ UH-1D	0	0	20	60	60
	CLASS 7B—GROUND SUPPORT					
5 J45699	GEN ST GAS ENG+ 3KW 60CY 1-3PH 120/240V 120/208V SKID SHOCK.	2	2	1	3	7
6 P96640	PUMPING ASSEMBLY FLAMMABLE LIQUID BULK TRANSFER+.	0	2	2	6	6
	CLASS 7G—ELECTRONICS					
7 Q42092	RADIO SET+ AN/URC-10	3	12	20	60	75
8 Q50421	RADIO SET AN/VRC-24	0	1	1	3	4
9 Q53001	RADIO SET AN/VRC-46	4	2	3	9	15
10 Q54154	RADIO SET AN/VRC-47	4	1	1	3	8
11 Q55114	RADIO SET AN/VRC-9	1	0	0	0	1
12 U81707	SWITCHBOARD TELEPHONE MANUAL+ SB-22/PT.	2	1	1	3	6
13 V31211	TELEPHONE SET+ TA-312/PT	15	6	9	27	48

Table 1-44. Summary of Equipment—Assault Helicopter Battalion, Combat Aviation Group, Airmobile Division—Continued

1	2	3	4	5	6	7
LIN	Nomenclature	HHC (1-156T)	Atk hel co (1-157T)	3 asslt hel co (1-158T)		Bn total (1-155T)
				(1)	(8)	
	CLASS 7K—TACTICAL VEHICLES					
14 G34815	DOLLY SET LIFT TRANSPORTABLE SHELTER + 5-1/4 TON W/E.	1	0	0	0	1
15 W95400	TRAILER CARGO + 1/4 TON 2 WHEEL W/E	7	2	3	9	18
16 W95537	TRAILER CARGO + 3/4 TON 2 WHEEL W/E	8	11	8	24	43
17 W95811	TRAILER CARGO + 1-1/2 TON 2 WHEEL W/E	3	2	2	6	11
18 W98825	TRAILER TANK + WATER 400 GALLON 1-1/2 TON 2 WHEEL W/E.	1	0	0	0	1
19 X38639	TRUCK AMBULANCE + 1/4 TON 4×4 W/E	1	0	0	0	1
20 X39735	TRUCK CARGO + 3/4 TON 4×4 W/E	8	11	8	24	43
21 X40009	TRUCK CARGO + 2-1/2 TON 6×6 W/E	4	2	2	6	12
22 X55627	TRUCK PLATFORM UTILITY + 1/2 TON 4×4 W/E	0	3	3	9	12
23 X57408	TRUCK TANK + FUEL SERVICING 2-1/2 TON 6×6 W/WINCH W/E.	0	1	1	3	4
24 X60833	TRUCK UTILITY + 1/4 TON 4×4 W/E	8	3	3	9	20
	CLASS 7M—WEAPONS					
25 A90117	ARMAMENT SUBSYSTEM HELICOPTER 7.62 MILLIMETER MACHINE GUN + LIGHT.	0	0	20	60	60
26 A90154	ARMAMENT SUBSYSTEM HELICOPTER 7.62MM MACHINE GUN + HIGH RATE.	3	0	0	0	3
27 A90391	ARMAMENT SUBSYSTEM HELICOPTER 7.62MM MG 2.75 IN ROCKET LAUNCHER +.	0	12	0	0	12
28 L44575	LAUNCHER GRENADE + 40 MILLIMETER	7	5	4	12	24
29 N96741	PISTOL CALIBER .45 AUTOMATIC +	16	5	4	12	33
30 R91244	REVOLVER CALIBER .38 + 4 INCH BARREL	15	41	65	195	251
31 R94977	RIFLE 5.56 MILLIMETER + W/E	64	47	44	132	243
	CLASS 7Q—GENERAL EQUIPMENT					
32 M66303	MONITOR LIQUID FUEL CONTAMINATION + 400 GPM.	0	0	2	6	6

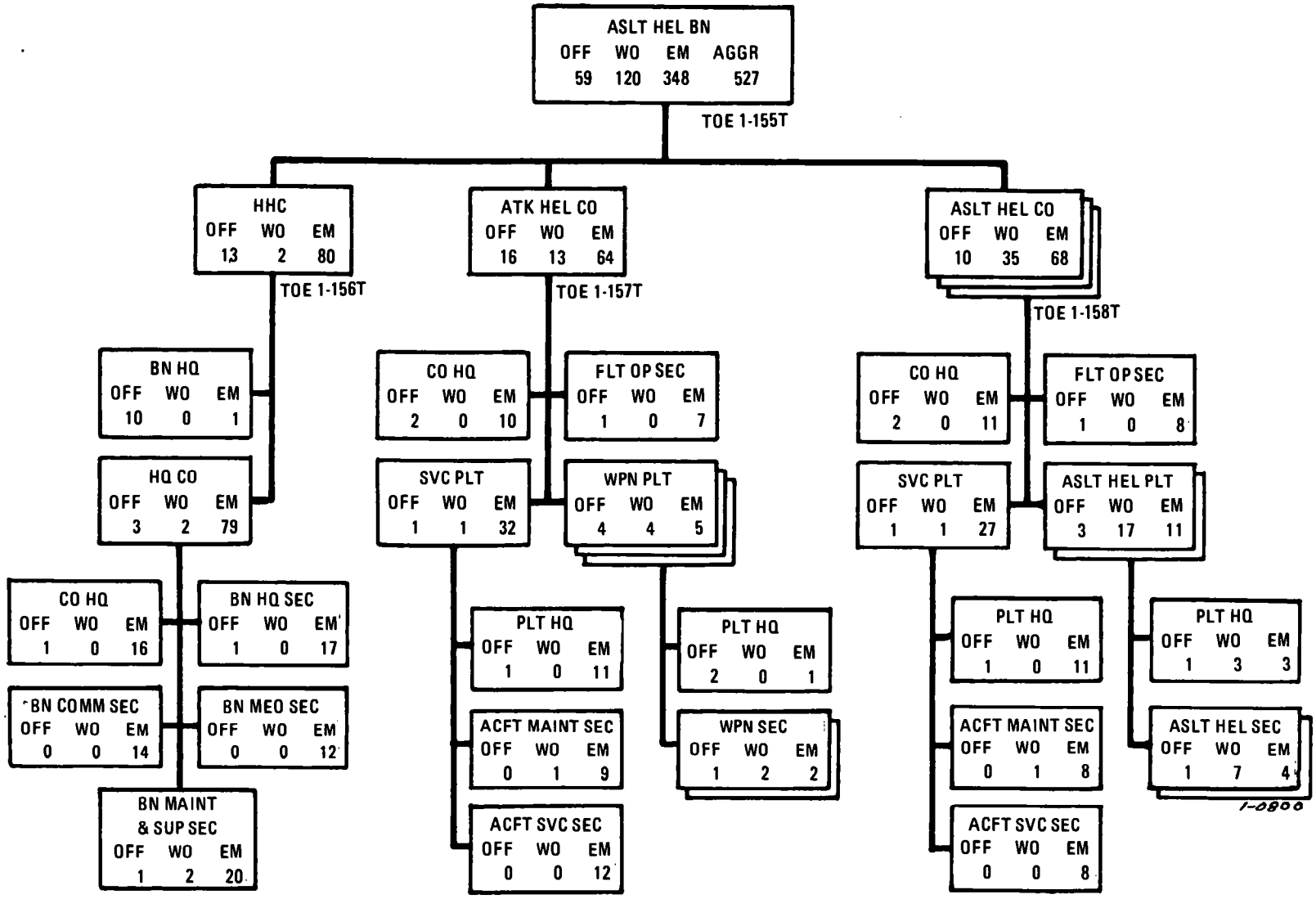

Figure 1–64. Assault helicopter battalion, combat aviation group, airmobile division.

TOE 1-155T ASLT HEL BN

1. MISSION

To provide tactical mobility for combat troops, supplies, and equipment of the division during the conduct of combat and airmobile operations.

2. ASSIGNMENT

Organic to combat aviation group, airmobile division, TOE 1-100T.

3. CAPABILITIES

a. Provides continuous (day and night) operations during visual and marginal weather conditions and limited operations under instrument weather conditions in support of the division in forward areas of the combat zone.

b. Based on 80-percent aircraft availability, provides, in a single lift, airlift for the assault elements of one infantry battalion.

c. Augments aeromedical evacuation from the immediate battlefield.

d. Provides armed air escort for airmobile operations within the combat zone.

e. Depends on the division administration company, TOE 12-77T, for personnel administrative support.

4. MOBILITY

One hundred-percent air transportable in Army and/or USAF aircraft.

TOE 1-156T HHC, ASLT HEL BN

1. MISSION

To furnish command, control, staff planning, and supervision for the assault helicopter battalion.

2. ASSIGNMENT

Organic to assault helicopter battalion, airmobile division, TOE 1-155T.

3. CAPABILITIES

a. Commands, controls, performs staff planning, furnishes communications, and supervises operations for subordinate units of the battalion and attached units.

b. Provides personnel to supervise supply, maintenance, and administration for organic and attached units.

c. Depends on the division administration company, TOE 12-77T, for personnel administrative support.

4. MOBILITY

One hundred-percent air transportable in Army and/or USAF aircraft.

Figure 1–64—Continued

TOE 1-157T ATK HEL CO, ASLT HEL BN

1. MISSION

To provide security for airmobile forces and to participate in offensive, defensive, and delaying actions as part of a highly mobile combined arms team.

2. ASSIGNMENT

Organic to assault helicopter battalion, airmobile division, TOE 1-155T.

3. CAPABILITIES

a. Provides armed air escort and air suppressive fire support for airmobile forces.

b. Participates in semi-independent operations, as required.

c. Provides effective air suppressive fires for counterguerrilla forces.

d. Depends on the division administration company, TOE 12-77T, for personnel administrative support.

4. MOBILITY

One hundred-percent air transportable in Army and/ or USAF aircraft.

TOE 1-158T ASLT HEL CO, ASLT HEL BN

1. MISSION

To provide tactical mobility for combat troops, supplies, and equipment of the division during the conduct of airmobile operations.

2. ASSIGNMENT

Organic to assault helicopter battalion, airmobile division, TOE 1-155T.

3. CAPABILITIES

a. Provides continuous (day and night) operations during visual and marginal weather conditions and limited operations under instrument weather conditions in support of the units in the combat zone.

b. Based on 80-percent availability of organic aircraft, provides, in a single lift, aircraft for one rifle company, including the infantry supporting weapons.

c. Provides air movement of troops, supplies, and equipment within the combat zone.

d. Augments aeromedical evacuation from the immediate battlefield.

e. Depends on the division administration company, TOE 12-77T, for personnel administrative support.

4. MOBILITY

One hundred-percent air transportable in Army and/or USAF aircraft.

Figure 1–64—Continued

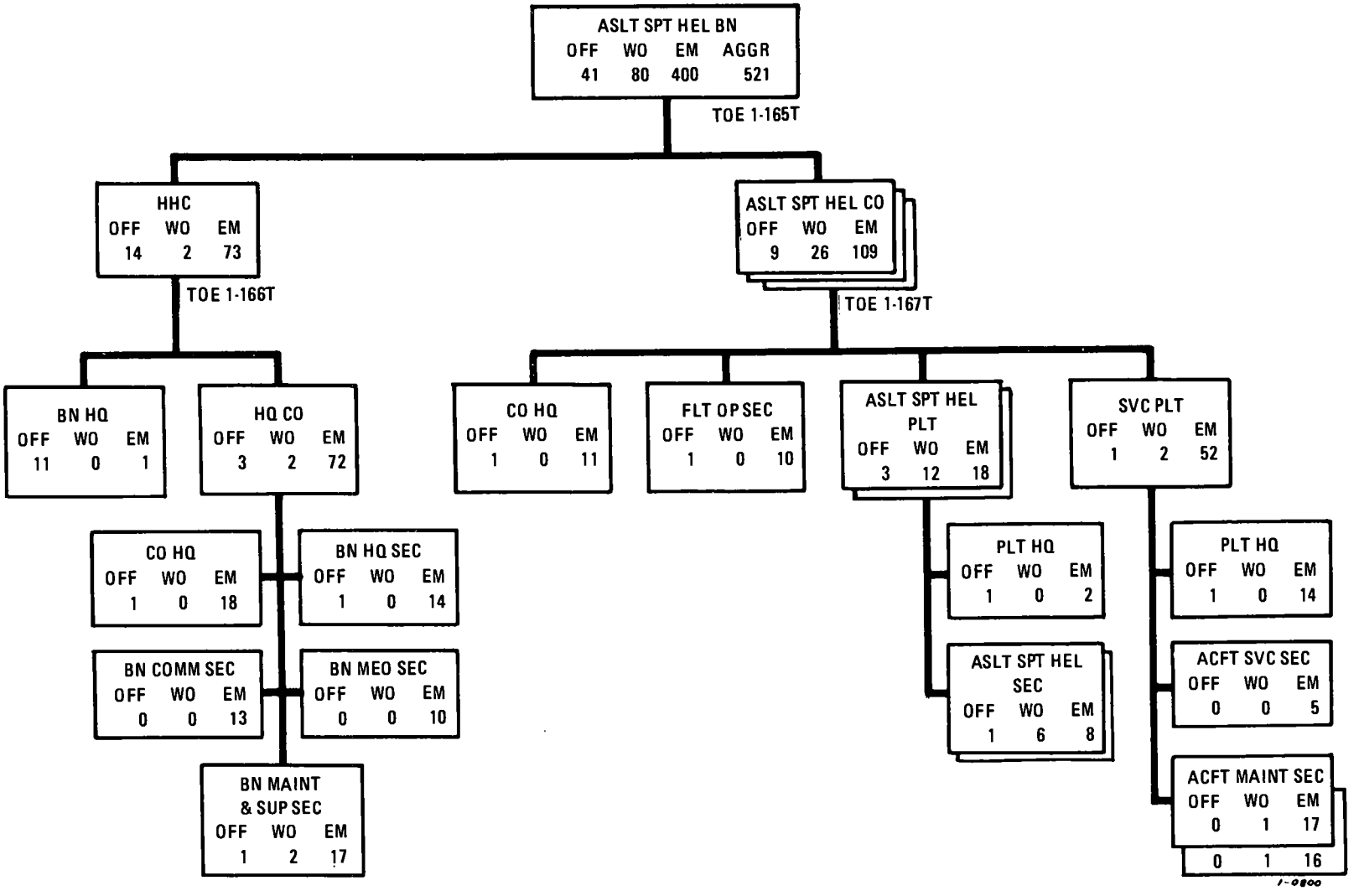

Figure 1–65. Assault support helicopter battalion, combat aviation group, airmobile division.

TOE 1-165T ASLT SPT HEL BN

1. MISSION

To provide tactical air movement of combat troops, supplies, and equipment in airmobile operations within the combat zone.

2. ASSIGNMENT

Organic to combat aviation group, airmobile division, TOE 1-100T.

3. CAPABILITIES

a. Provides continuous (day and night) operations during visual weather conditions and limited operations under instrument weather conditions.

b. Provides, in a single lift, airlift for the assault elements of two infantry battalions (960 combat-equipped troops), the combat elements of three 105-mm howitzer batteries, 90,000 pounds of cargo or an equivalent logistic load, or any combination thereof.

c. Augments aeromedical evacuation, as required.

d. Depends on the division administration company, TOE 12-77T, for personnel administrative support.

4. MOBILITY

One hundred-percent air transportable in Army and/or USAF aircraft.

TOE 1-166T HHC, ASLT SPT HEL BN

1. MISSION

To furnish command, control, staff planning, and supervision for the assault support helicopter battalion.

2. ASSIGNMENT

Organic to assault support helicopter battalion, airmobile division, TOE 1-165T.

3. CAPABILITIES

a. Commands, controls, performs staff planning, furnishes communication control, and supervises operations for subordinate units of the battalion and attached units.

b. Provides personnel to supervise supply, maintenance, medical service, and administration for organic and attached units.

c. Depends on the division administration company, TOE 12-77T, for personnel administrative support.

4. MOBILITY

One hundred-percent air transportable in Army and/or USAF aircraft.

TOE 1-167T ASLT SPT HEL CO, ASLT SPT HEL BN

1. MISSION

To provide tactical mobility for combat troops, supplies, and equipment of the division during the conduct of combat and airmobile operations.

2. ASSIGNMENT

Organic to assault support helicopter battalion, airmobile division, TOE 1-165T.

3. CAPABILITIES

a. Provides continuous (day and night) operations during visual and marginal weather conditions and limited operations under instrument weather conditions in support of the division.

b. Provides, in a single lift, airlift for the assault elements of two infantry companies (320 combat-equipped troops), the combat elements of one 105-mm howitzer battery, 30,000 pounds of cargo or an equivalent logistic load, or any combination thereof.

c. Augments aeromedical evacuation, as required.

d. Depends on the division administration company, TOE 12-77T, for personnel administrative support.

4. MOBILITY

One hundred-percent air transportable in Army and/or USAF aircraft.

Figure 1-65—Continued

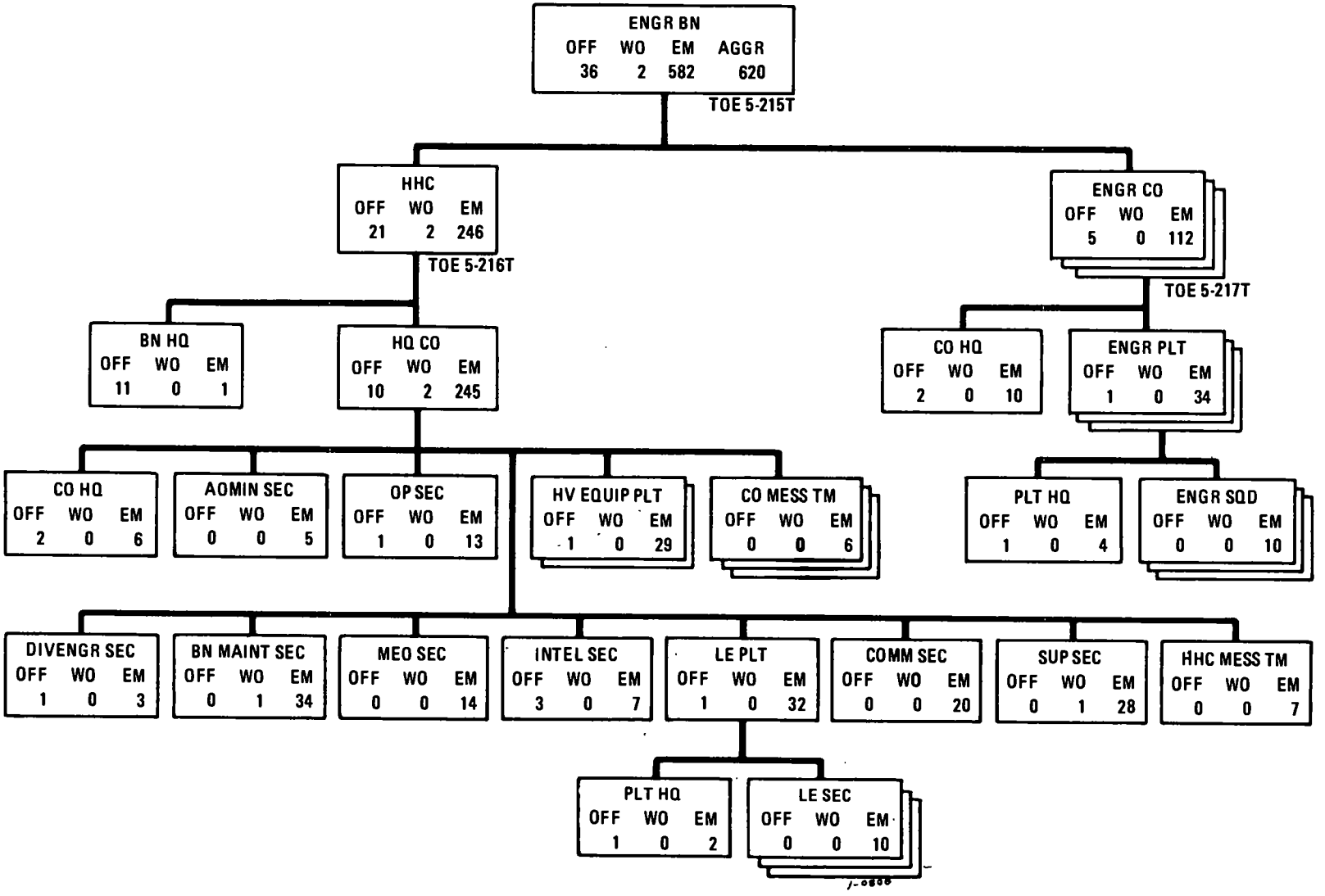

Figure 1–66. Engineer battalion, airmobile division.

TOE 5-215T ENGR BN

1. MISSION

To increase the combat effectiveness of the airmobile division by performing general and special engineer tasks and to undertake and carry out infantry missions, when required.

2. ASSIGNMENT

Organic to airmobile division, TOE 67T.

3. CAPABILITIES

a. Provides engineer staff planning for the division and supervises organic and attached engineer units.

b. Furnishes general engineer support, primarily construction, repair, and maintenance of aircraft landing sites for USAF military medium-cargo and all Army aircraft, fords, culverts, and cross-gap bridging.

c. Assists in the removal and emplacement of obstacles, including mines and boobytraps.

d. Provides ADM support, when required, by the attachment of TOE 5-570G ADM teams.

e. Provides engineer reconnaissance and intelligence service.

f. Furnishes personnel and equipment for purification and dispensing of potable water.

g. Assists in the assault of fortified positions and assault demolition of obstacles.

h. Gives technical assistance to other troop units of the division in the construction of obstacles, fortifications, barrier emplacement, camouflage, deception devices, and other engineer matters.

i. Conducts infantry-type combat missions, when required.

j. Performs organizational maintenance on organic equipment.

k. Depends on the division administration company, TOE 12-77T, for personnel administrative support.

4. MOBILITY

One hundred-percent air transportable in Army and/or USAF aircraft.

TOE 5-216T HHC, ENGR BN

1. MISSION

a. To provide an engineer special staff section for the division and command and staff for the engineer battalion, airmobile division.

b. To provide limited administration, communications, reconnaissance, maintenance support, mess, supply, and unit-level medical service for the engineer battalion.

c. To undertake and carry out combat missions of an HHC, when required.

2. ASSIGNMENT

Organic to engineer battalion, airmobile division, TOE 5-215T.

3. CAPABILITIES

a. Provides staff planning and supervision of engineer operations within the division, including that required for the operations of attached engineer troops.

b. Furnishes engineer reconnaissance and intelligence service and operates the battalion communication system.

c. Provides five water purification and distribution points for the supply of potable water.

d. Furnishes ADM support, when required, by the attachment of TOE 5-570G ADM teams.

e. Provides unit-level medical service, to include medical care and evacuation for the battalion, establishes an aid station, and furnishes aidmen to battalion units.

f. Provides engineer equipment support for the combat engineer companies.

g. Depends on the division administration company, TOE 12-77T, for personnel administrative support.

4. MOBILITY

One hundred-percent air transportable in Army and/or USAF aircraft.

Figure 1-66—Continued

1. MISSION

a. To provide combat support for the engineer battalion, airmobile division, by accomplishing general and special engineer tasks.

b. To undertake and carry out infantry combat missions, when required.

2. ASSIGNMENT

Organic to engineer battalion, airmobile division, TOE 5-215T.

3. CAPABILITIES

a. Accomplishes combat engineer tasks and limited additional engineer support to the extent possible.

b. Establishes roadblocks and barriers by emplacement of obstacles, including mines and boobytraps, and demolition of bridges and structures.

c. Constructs air-landing facilities for USAF medium-cargo and all Army aircraft with equipment support from HQ company.

d. Makes expedient bridge repairs.

e. Destroys equipment, supplies, structures, and materiel by burning or demolition.

f. Conducts airmobile engineer and infantry combat operations.

g. Performs organizational maintenance of organic equipment.

4. MOBILITY

One hundred-percent air transportable in Army and/or USAF aircraft.

Figure 1–66—Continued

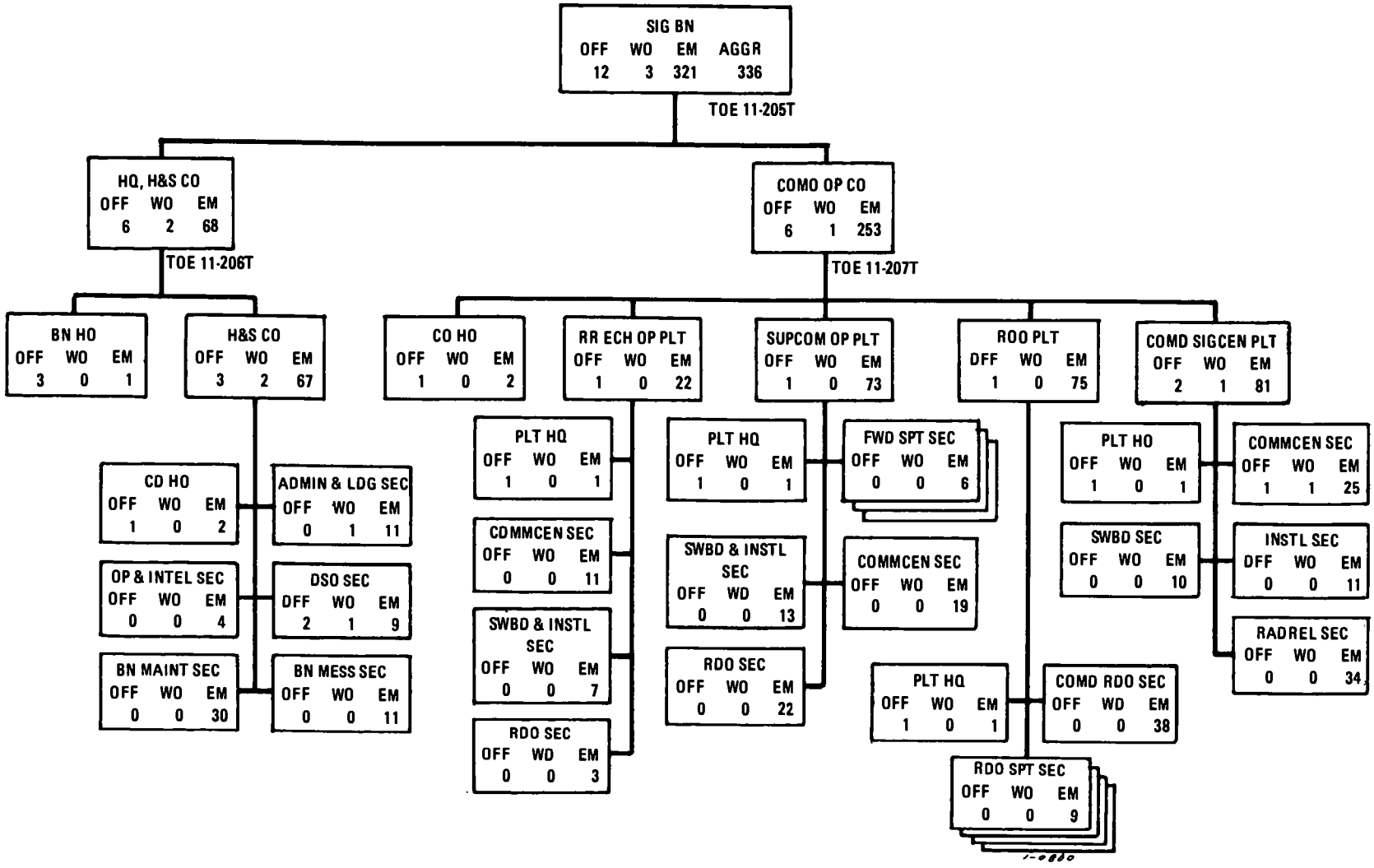

Figure 1–67. Signal battalion, airmobile division.

1. MISSION

a. To provide signal communications for the echelons of an airmobile division HQ and DISCOM HQ, exclusive of internal radio nets.

b. To establish, operate, and provide division common signal service.

c. To establish and operate the division multichannel communication system.

d. To perform limited direct support maintenance on cryptographic equipment in the division and organizational maintenance on equipment organic to the battalion.

2. ASSIGNMENT

Organic to airmobile division, TOE 67T.

3. CAPABILITIES

a. Plans and supervises communications, training, and other signal activities.

b. Installs, operates, and maintains wire and radio communications for division HQ, division rear, and DISCOM HQ.

c. Installs, operates, and maintains multichannel communication service to brigades, DISCOM, division artillery, and other units operating directly under division HQ.

d. Installs, operates, and maintains one division FM/voice station and all RATT stations terminated at each brigade and division artillery level.

e. Performs direct support maintenance on cryptographic equipment of the division.

f. Performs organizational maintenance on equipment organic to the battalion.

g. Provides message center, messenger, cryptographic, and teletypewriter facilities.

h. Depends on–

(1) Other divisional units for medical, dental, and religious services; maintenance of personnel records; and supplemental motor transportation.

(2) The division combat aviation group or aviation units not organic to the division for aerial wire-laying operations, division air messenger services, and aircraft to install and operate three airborne radio relay.

(3) The DISCOM for direct support maintenance of equipment, other than cryptographic equipment.

(4) Army or other higher echelons for photographic services.

(5) Other divisional units for vehicular and generator refueling services.

(6) Signal units of higher HQ for RATT and radio-relay terminal equipment for higher or adjacent command radio nets and external multichannel communication systems.

4. MOBILITY

One hundred-percent air transportable in Army and/or USAF aircraft.

TOE 11-206T HQ, H&S CO, SIG BN

1. MISSION

a. To direct and coordinate operations and training of the battalion and to provide the HQ facilities with which the battalion commander exercises control.

b. To provide the division a signal officer and his staff and staff facilities.

c. To provide administrative and logistic support for the battalion.

d. To provide direct support maintenance for cryptographic equipment of the division and organizational maintenance for organic equipment.

2. ASSIGNMENT

Organic to signal battalion, airmobile division, TOE 11-205T.

3. CAPABILITIES

a. Plans, commands, controls, and coordinates the training and operations of an airmobile division signal battalion.

b. Provides the signal staff section for division HQ.

c. Provides administrative and logistic support for an airmobile division signal battalion, to include–

(1) Liaison with the administration company, airmobile division.

(2) Direct support maintenance for cryptographic equipment of the battalion.

(3) Organizational maintenance for equipment organic to the battalion.

(4) Mess facilities for the personnel of the battalion.

d. Performs direct support maintenance on cryptographic equipment of the division.

4. MOBILITY

One hundred-percent air transportable in Army and/or USAF aircraft.

Figure 1–67—Continued

1. MISSION

a. To provide signal communications for the echelons of division HQ and DISCOM HQ, exclusive of internal radio nets.

b. To provide signal center service to units located in the vicinity of the echelons of division HQ and DISCOM that is supplemental to organic facilities.

c. To establish and operate the division multichannel communication system.

d. To provide and operate net control and other stations, as required, in division and signal battalion radio nets.

2. ASSIGNMENT

Organic to signal battalion, airmobile division, TOE 11-205T.

3. CAPABILITIES

a. Establishes and operates signal facilities for the echelons of division HQ and DISCOM, to include simultaneous operation on a 24-hour basis of–

(1) Message center, motor messenger, cryptographic, and teletypewriter facilities.

(2) Manual telephone switchboard and local telephone service.

(3) RATT and FM/voice radio net control and other stations in division radio nets and FM radio-wire-integration stations at division HQ and DISCOM.

b. Installs, operates, and maintains a division FM/voice station and RATT stations terminated at the CP locations of division artillery and each brigade.

c. Installs and operates forward communication facilities for DISCOM elements, to include manual telephone switchboard and division RATT service to DISCOM elements in the division forward area, supplemental to organic capabilities.

d. Installs, operates, and maintains the division multichannel communication system stations at division HQ, DISCOM, division artillery, each brigade, and other units operating directly under division HQ.

e. Provides signal center service to units located in the vicinity of division echelon signal centers, to include the handling of message traffic and the provision of telephone switching service and connecting lines, supplemental to organic facilities.

f. Installs, operates, and maintains three FM/voice airborne radio relays from fixed-wing aircraft provided by the division combat aviation group or aviation units not organic to the division.

g. Depends on HQ, H&S company, signal battalion, for mess personnel and facilities; organizational motor, signal, cryptographic, and generator maintenance; and administrative and logistic support.

4. MOBILITY

One hundred-percent air transportable in Army and/or USAF aircraft.

Figure 1-67—Continued

Table 1-45. Summary of Equipment—Assault Support Helicopter Battalion, Combat Aviation Group, Airmobile Division

1	2	3	4	5	6
LIN	Nomenclature	HHC (1-166T)	3 aslt spt hel co (1-167T)		Bn total (1-165T)
			(1)	(3)	
	CLASS 2A—AIR				
1 X23227	TRANSPORTER AIRMOBILE+ HYD LIFT FOR SHELTER AND X-4 CONTAINER.	1	2	6	7
	CLASS 2Q—GENERAL EQUIPMENT				
2 W98270	TRAILER PLATFORM WAREHOUSE+ 6000 LB CAP 108L×48W IN PNEUM.	15	16	48	63
	CLASS 7A—AIR				
3 K30378	HELICOPTER CARGO TRANSPORT+ CH-47A	0	16	48	48
4 K30645	HELICOPTER OBSERVATION+ OH-6A	3	0	0	3
	CLASS 7B—GROUND SUPPORT				
5 J45699	GEN ST GAS ENG+ 3KW 60CY 1-3PH 120/240V 120/208V SKID SHOCK.	2	2	6	8
6 P90610	PUMP CENTRF+ GAS DRVN BASE MTD 1-1/2 IN 100 GPM	6	18	54	60
7 Y35143	WATER PURIF EQUIP SET+ DIATOMITE FILTER 420GPH	1	0	0	1
	CLASS 7G—ELECTRONICS				
8 Q32756	RADIO SET AN/GRC-106	1	1	3	4
9 Q42092	RADIO SET+AN/URC-10	3	16	48	51
10 Q50421	RADIO SET AN/VRC-24	0	1	3	3
11 Q53001	RADIO SET AN/VRC-46	2	3	9	11
12 Q54154	RADIO SET AN/VRC-47	1	4	12	13
13 Q55114	RADIO SET AN/VRC-49	3	0	0	3
14 U81707	SWITCHBOARD TELEPHONE MANUAL+ SB-22/PT	2	1	3	5
15 V31211	TELEPHONE SET+TA-312/PT	13	6	18	31
	CLASS 7K—TACTICAL VEHICLES				
16 G34815	DOLLY SET LIFT TRANSPORTABLE SHELTER+ 5-1/4 TON W/E.	1	0	0	1
17 X38639	TRUCK AMBULANCE+ 1/4 TON 4×4 W/E	1	0	0	1
18 X39735	TRUCK CARGO+ 3/4 TON 4×4 W/E	2	1	3	5
19 X40009	TRUCK CARGO+ 2-1/2 TON 6×6 W/E	1	0	0	1
20 X40146	TRUCK CARGO+ 2-1/2 TON 6×6 W/WINCH W/E	0	1	3	3
21 X57408	TRUCK TANK+ FUEL SERVICING 2-1/2 TON 6×6 W/ WINCH W/E.	2	0	0	2
22 X60833	TRUCK UTILITY+ 1/4 TON 4×4 W/E	7	7	21	28
	CLASS 7M—WEAPONS				
23 A90122	ARMAMENT SUBSYSTEM HELICOPTER 7.62MM MACHINE GUN+ DOOR MTD L W.	0	16	48	48
24 A90154	ARMAMENT SUBSYSTEM HELICOPTER 7.62MM MACHINE GUN+ HIGH RATE.	3	0	0	3
25 L44575	LAUNCHER GRENADE+ 40 MILLIMETER	2	5	15	17
26 L92386	MACHINE GUN 7.62 MILLIMETER+ LIGHT FLEXIBLE	0	16	48	48
27 N96741	PISTOL CALIBER .45 AUTOMATIC+	11	5	15	26
28 R91244	REVOLVER CALIBER .38+ 4 INCH BARREL	11	67	201	212
29 R94977	RIFLE 5.56 MILLIMETER+ W/E	67	72	216	283

Table 1-46. Summary of Equipment—Engineer Battalion, Airmobile Division

1	2	3	4	5	6
LIN	Nomenclature	HHC (5-216T)	3 engr co (5-217T)		Bn total (5-215T)
			(1)	(3)	
	CLASS 7B—GROUND SUPPORT				
1 F39172	CRANE WHEEL MTD + 3 TON	2	0	0	2
2 J43918	GEN ST GAS ENG +1.5KW 60CY 1PH 2 WIRE AC 120V SHOCK	2	0	0	2
3 J45699	GEN ST GAS ENG + 3KW 60CY 1-3PH 120/240V 120/208V SKID SHOCK.	6	0	0	6
4 J47068	GEN ST GAS ENG + 5KW 60CY 1-3PH AC 120/240 120/208V SKD-SHK MTD.	5	0	0	5
5 J74886	GRADER ROAD MOTORIZED + DSL DRVN SECTIONALIZED.	6	0	0	6
6 J75239	SCRAPER EARTH MOVING GRADERMOUNTING + HYD OPRTD.	4	0	0	4
7 L76693	LOADER SCOOP TYPE + SEC 2-1/2 CU YD	2	0	0	2
8 S10657	ROLLER AIR MOBILE + SINGLE DRUM	3	0	0	3
9 S10682	ROLLER AIR MOBILITY + VIBRATING	3	0	0	3
10 S11684	ROLLER MOTORIZED PNEU TIRED + AIR MOBILE 9 WHEEL.	2	0	0	2
11 S12575	ROLLER TOWED SHEEPSFOOT + 2 DR	2	0	0	2
12 S56119	SCRAPER EARTH MOVING TOWED + 8 CU YD	4	0	0	4
13 W76268	TRACTOR FULL TRCKD LOW SPD + MED DSP SECTNLZED AIR TRNSPTBL W/ATT.	4	0	0	4
14 W76302	TRACTOR AIR MOBILE + W/BACKHOE AND FRONT LOADER 1/2 CU YD.	3	0	0	3
15 W76336	TRACTOR AIR MOBILE + W/BLADE	6	0	0	6
16 X52818	TRUCK LIFT FORK + ROUGH TERRAIN 3000 LB	1	0	0	1
17 Y36239	WATER PURIF SET + PTBL 600 GPH	5	0	0	5
	CLASS 7G—ELECTRONICS				
18 Q53001	RADIO SET AN/VRC-46	4	3	9	13
19 Q54154	RADIO SET AN/VRC-47	5	1	3	8
20 Q55114	RADIO SET AN/VRC-49	3	0	0	3
21 U81707	SWITCHBOARD TELEPHONE MANUAL + SB-22/PT	2	0	0	2
22 U82529	SWITCHBOARD TELEPHONE MANUAL + SB-993/GT	0	4	12	12
23 V31211	TELEPHONE SET + TA-312/PT	16	7	21	37
	CLASS 7K—TACTICAL VEHICLES				
24 G34815	DOLLY SET LIFT TRANSPORTABLE SHELTER + 5-1/4 TON W/E.	3	0	0	3
25 W94441	TRAILER BASIC UTILITY + 2-1/2 TON 2 SINGLE WHEELS W/E.	2	0	0	2
26 W95400	TRAILER CARGO + 1/4 TON 2 WHEEL W/E	21	4	12	33
27 W95537	TRAILER CARGO + 3/4 TON 2 WHEEL W/E	12	1	3	15
28 W95811	TRAILER CARGO + 1-1/2 TON 2 WHEEL W/E	3	0	0	3
29 W98825	TRAILER TANK + WATER 400 GALLON 1-1/2 TON 2 WHEEL W/E.	1	0	0	1
30 X38639	TRUCK AMBULANCE + 1/4 TON 4×4 W/E	1	0	0	1
31 X39735	TRUCK CARGO + 3/4 TON 4×4 W/E	13	0	0	13
32 X40420	TRUCK CARGO + 2-1/2 TON 6×6 XLWB W/WINCH W/E	1	0	0	1
33 X43228	TRUCK DUMP + 3/4 TON 4×4 W/E	12	10	30	42
34 X43297	TRUCK DUMP + 2-1/2 TON 6×6 W/E	15	0	0	15
35 X60833	TRUCK UTILITY + 1/4 TON 4×4 W/E	21	4	12	33
36 X63094	TRUCK WRECKER + 3/4 TON 4×4 W/E	1	0	0	1
37 Z90492	TRAILER FLAT BED + 12 TON TILT BED TRI-AXLE	8	0	0	8

Table 1-46. Summary of Equipment—Engineer Battalion, Airmobile Division—Continued

1	2	3	4	5	6
LIN	Nomenclature	HHC (5-216T)	3 engr co (5-217T)		Bn total (5-215T)
			(1)	(3)	
	CLASS 7M—WEAPONS				
38 G02204	DETECTING SET MINE+ PTBL METALLIC AND NON-METALLIC.	2	9	27	29
39 G02341	DETECTING SET MINE+ PTBL METALLIC	2	9	27	29
40 G02478	DETECTING SET MINE TRUCK MOUNTED+	1	0	0	1
41 L44575	LAUNCHER GRENADE+ 40 MILLIMETER	5	9	27	32
42 L92386	MACHINE GUN 7.62 MILLIMETER+ LIGHT FLEXIBLE	2	12	36	38
43 M75714	MOUNT TRIPOD MACHINE GUN+ 7.62 MILLIMETER	2	12	36	38
44 N96741	PISTOL CALIBER .45 AUTOMATIC+	26	19	57	83
45 R94977	RIFLE 5.56 MILLIMETER+ W/E	242	98	294	536
	CLASS 7Q—GENERAL EQUIPMENT				
46 B84404	BOAT RECONNAISSANCE+ PNEUMATIC 3 MAN	2	0	0	2
47 T10138	SHOP EQUIP CONTACT MAINT TRK MTD+	3	0	0	3

Table 1-47. Summary of Equipment—Signal Battalion, Airmobile Division

1	2	3	4	5
LIN	Nomenclature	HQ, H&S co (11-206T)	Comd op co (11-207T)	Bn total (11-205T)
	CLASS 7B—GROUND SUPPORT			
1 J45699	GEN ST GAS ENG+ 3KW 60CY 1-3PH 120/240V 120/208V SKID SHOCK	4	6	10
	CLASS 7G—ELECTRONICS			
2 Q50421	RADIO SET AN/VRC-24	0	2	2
3 Q53001	RADIO SET AN/VRC-46	3	7	10
4 Q54154	RADIO SET AN/VRC-47	0	2	2
5 Q55114	RADIO SET AN/VRC-49	2	5	7
6 U81707	SWITCHBOARD TELEPHONE MANUAL+ SB-22/PT	2	8	10
7 V31211	TELEPHONE SET+ TA-312/PT	10	204	214
	CLASS 7K—TACTICAL VEHICLES			
8 W95400	TRAILER CARGO+ 1/4 TON 2 WHEEL W/E	6	50	56
9 W95537	TRAILER CARGO+ 3/4 TON 2 WHEEL W/E	6	0	6
10 W98825	TRAILER TANK+ WATER 400 GALLON 1-1/2 TON 2 WHEEL W/E	1	0	1
11 X39872	TRUCK CARGO+ 3/4 TON 4×4 W/WINCH W/E	7	0	7
12 X60833	TRUCK UTILITY+ 1/4 TON 4×4 W/E	6	69	75
	CLASS 7M—WEAPONS			
13 L44575	LAUNCHER GRENADE+ 40 MILLIMETER	4	27	31
14 L92386	MACHINE GUN 7.62 MILLIMETER+ LIGHT FLEXIBLE	2	0	2
15 M75714	MOUNT TRIPOD MACHINE GUN+ 7.62 MILLIMETER	2	0	2
16 N96741	PISTOL CALIBER .45 AUTOMATIC+	11	28	39
17 R94977	RIFLE 5.56 MILLIMETER+ W/E	65	232	2

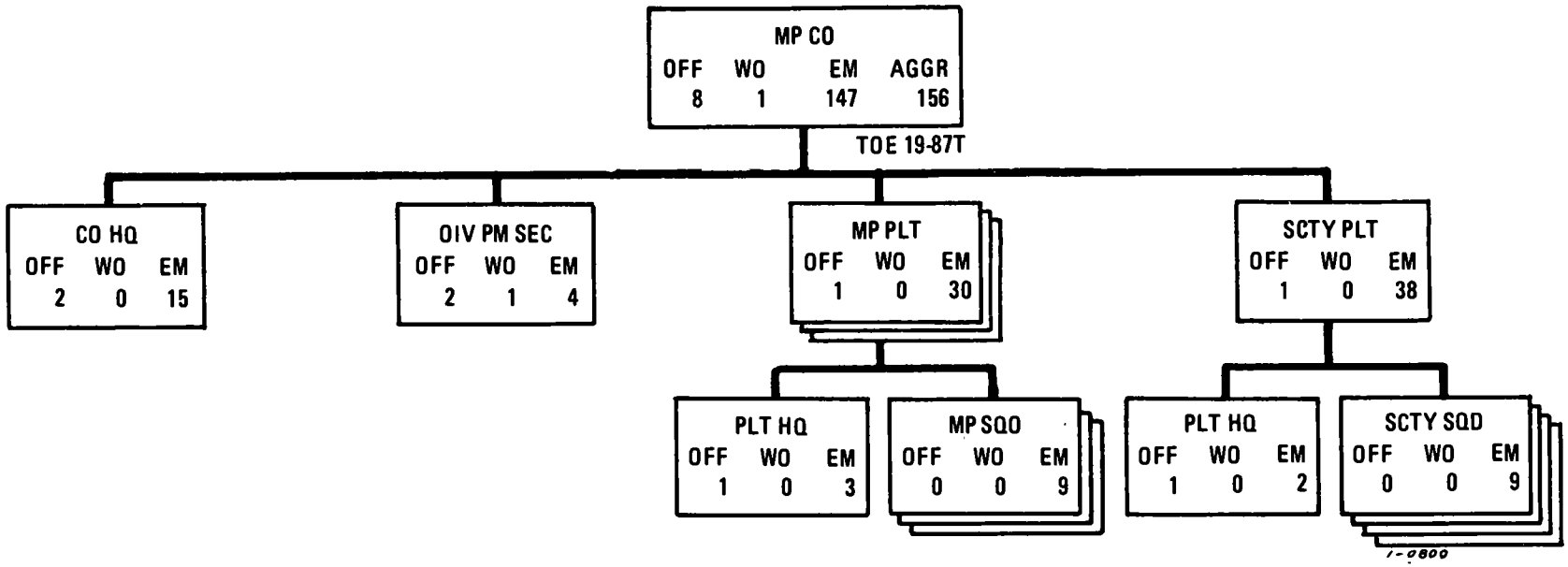

1. MISSION

To provide military police support to the airmobile division.

2. ASSIGNMENT

Organic to airmobile division, TOE 67T.

3. CAPABILITIES

a. Provides provost marshal section to division HQ.

b. Establishes 18 motor patrols or 27 traffic control posts, or combinations thereof, over a 24-hour period when the three military police platoons are involved in no other duties.

c. Provides local and internal security to division main and tactical CP's.

d. Operates a central division prisoner of war collecting point and forward division prisoner of war collecting points in support of committed brigades, as required.

e. Evacuates prisoners of war from forward division prisoner of war collecting points to the division central prisoner of war collecting point, as required.

f. Prevents and investigates crime within the division area.

g. Controls the circulation of individuals in conjunction with traffic control operations.

h. Provides escort and security of high-priority shipments and movements by motorized traffic patrols.

i. Provides protection for designated persons and property.

j. Enforces military law, orders, and regulations.

k. Provides battalion-level maintenance for organic vehicles.

l. Assists in rear area security operations in conjunction with other military activities.

m. Depends on HHC, airmobile division, TOE 67-2T, or teams assigned from TOE 29-500G for mess facilities and on higher HQ or a supported unit for resupply of all classes of supply.

4. MOBILITY

One hundred-percent air transportable in Army and/or USAF aircraft.

Figure 1–68. Military police company, airmobile division.

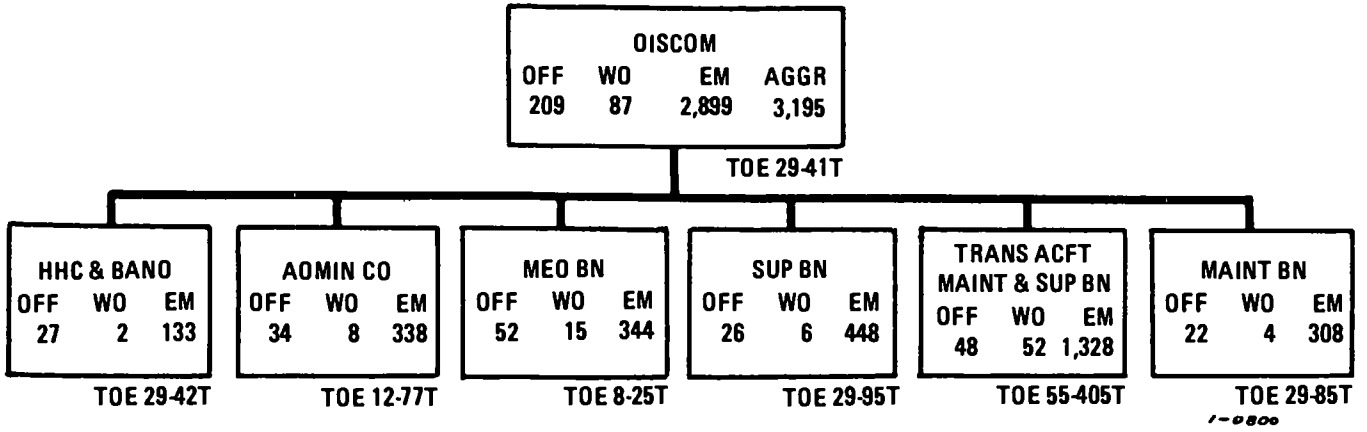

1. MISSION

To provide division-level combat service support to all assigned or attached elements of the division, except for military police service, communications, and construction, and those administrative services provided by special staff sections in the administration company.

2. ASSIGNMENT

Organic to airmobile division, TOE 67T.

3. CAPABILITIES

a. Provides division-level combat service support, to include–

(1) Requisition, receipt, storage, and distribution of all classes of supplies, maintaining a 1-day reserve of supplies for the division.

(2) Direct support maintenance, except for medical and cryptographic items.

(3) Medical service support, to include evacuation of patients, medical (and emergency dental) treatment, medical supply, and organizational maintenance for medical equipment.

(4) Graves registration service, when appropriate teams from TOE 10-500G are attached.

(5) Air equipment supply maintenance support to the division.

(6) Music for division functions.

b. Advises the division commander on combat service support activities and provides technical supervision of functions within those areas represented by units of the command.

c. Depends on nonorganic aircraft to supplement organic aircraft and surface transportation required to move personnel and supplies.

4. MOBILITY

a. Approximately 10-percent mobile, using organic surface and air transportation; requires additional surface and air transportation for unit movement.

b. One hundred-percent air transportable in USAF aircraft.

Figure 1–69. Support command, airmobile division.

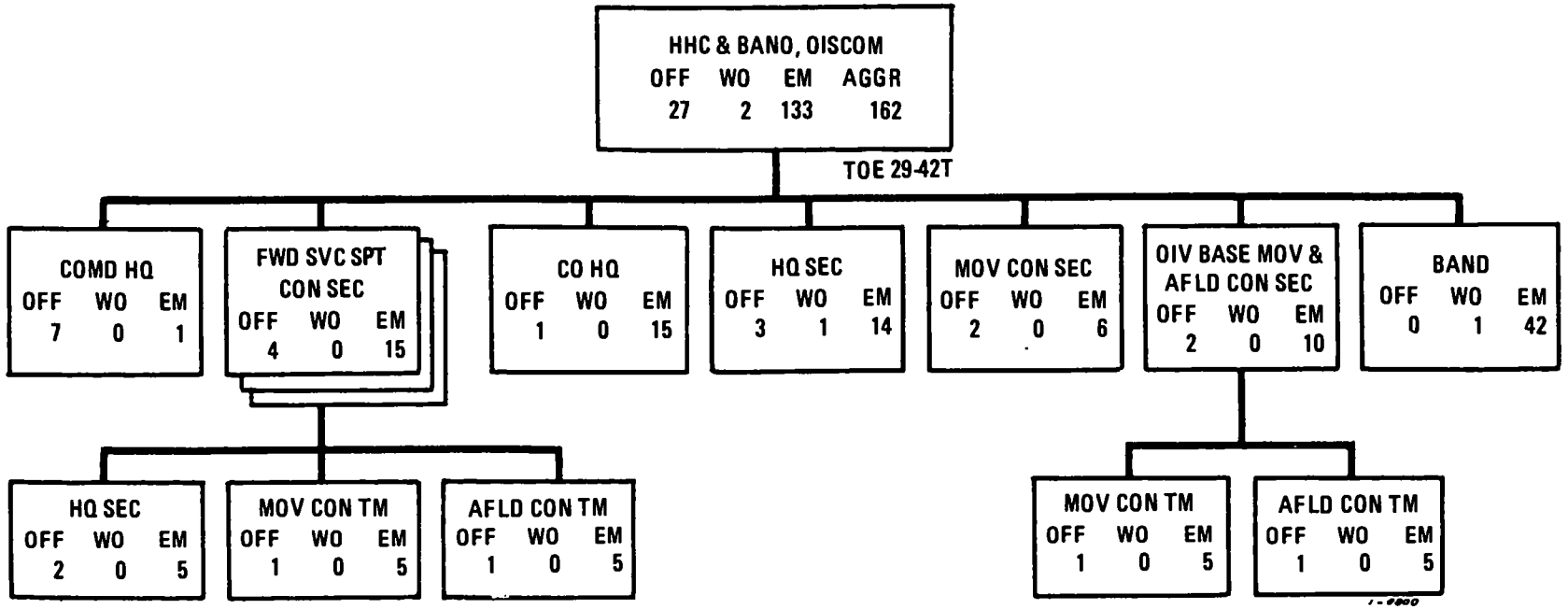

1. MISSION

a. To provide command and control of DISCOM organic and attached units, except for operational control of the division special staff elements of the administration company, TOE 12-77T.

b. To insure adequate combat service support to the division and attached units in areas of responsibility.

c. To provide technical supervision of all combat service support functions within the division in the functional areas represented by its supporting units.

d. To provide suitable music for military functions, formal concerts, and recreational activities.

2. ASSIGNMENT

Organic to support command, airmobile division, TOE 29-41T.

3. CAPABILITIES

a. Plans for, supervises, and controls combat service support operations conducted by elements of DISCOM.

b. Advises the division commander on combat service support operations and provides technical supervision over the conduct of logistic and administrative service functions throughout the division, within the functional areas represented by its operating units.

c. Coordinates and exercises administrative control over the functional areas represented by its operating units.

d. Determines requirements for, processes, maintains records on, and controls distribution of all classes of supplies, repair parts, and aircraft parts and supplies, except for medical supplies and class V.

e. Plans and controls use of organic aircraft and surface transportation and insures that nonorganic aircraft and surface transportation specifically allocated or attached for logistic and administrative missions are effectively employed.

f. Directs the training of personnel and units of DISCOM.

g. Supervises unit administration and supply activities within DISCOM.

4. MOBILITY

One hundred-percent air transportable in Army and/or USAF aircraft.

Figure 1-70. HHC and band, support command, airmobile division.

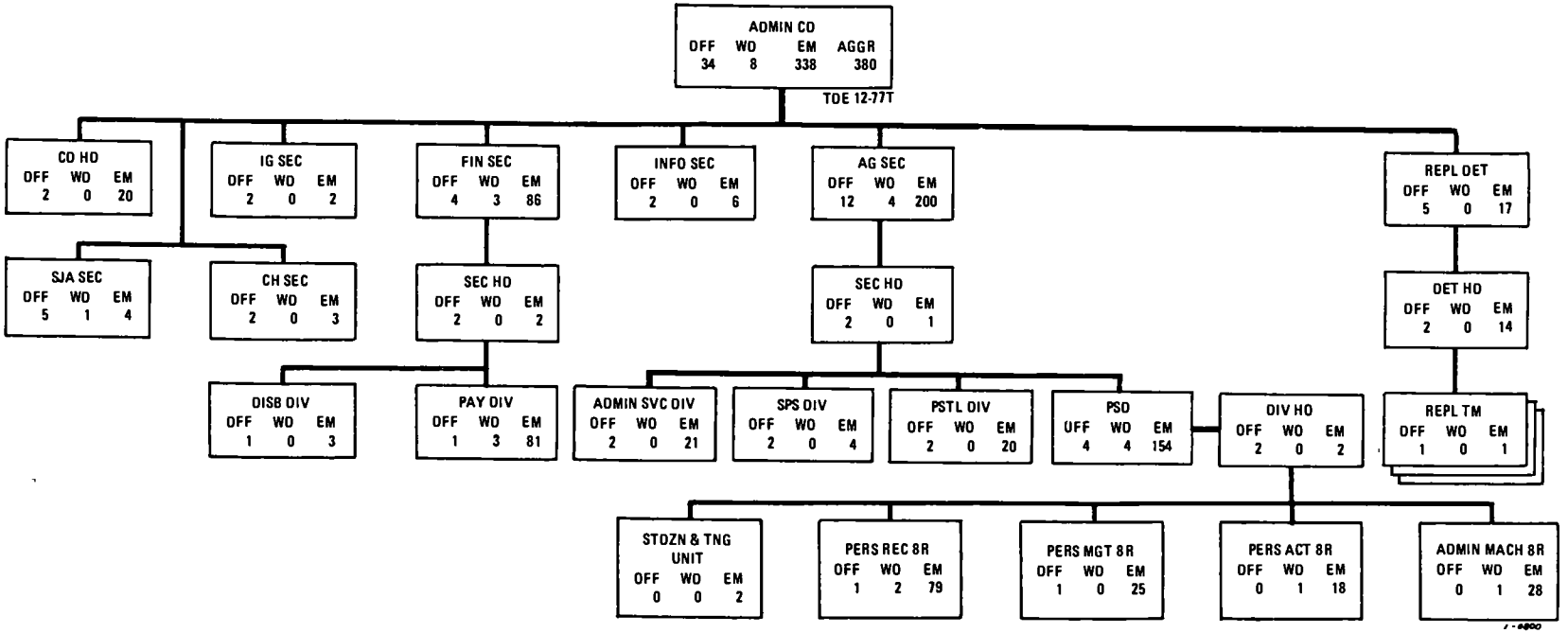

Figure 1–71. Administration company, support command, airmobile division.

1. MISSION

a. To serve as a carrier unit that provides support for certain elements of the special staff.

b. To provide the necessary personnel and administrative support to sustain the division, to include replacement support and a centralized, mechanized personnel service for all units assigned or attached to the division.

c. To comprise the division HQ rear echelon.

2. ASSIGNMENT

Organic to support command, airmobile division, TOE 29-41T.

3. CAPABILITIES

a. Provides logistic support of and plans for tactical security for staff agencies assigned the company.

b. Provides division-level personnel and administrative support for all personnel assigned or attached to the division.

c. Provides company-level personnel and administrative support for personnel assigned to the company.

d. Provides mess facilities for personnel assigned, attached, or located in the division HQ rear echelon.

e. Has the capacity to receive, control, and administratively process up to 300 individuals at any given time. This may be any combination of personnel arriving as replacements, returning from the hospital, or departing for rotation or other purposes. Additionally, the replacement detachment can control any number of replacement TOE units that have their own mess capability.

f. Can operate a separate mess facility for personnel processing through the replacement detachment when the AG deems this necessary.

g. Depends on the signal battalion, TOE 11-205T, for communications.

h. When a combat maneuver battalion or artillery unit is transferred or detached from the division, a personnel team from the personnel service division, AG section, will be transferred with or attached to the maneuver battalion or artillery unit, as appropriate. This personnel team will be composed of those personnel who regularly maintain the maneuver battalion or artillery unit records in the personnel service division.

4. MOBILITY

One hundred-percent air transportable in Army and/or USAF aircraft.

Figure 1-71—Continued

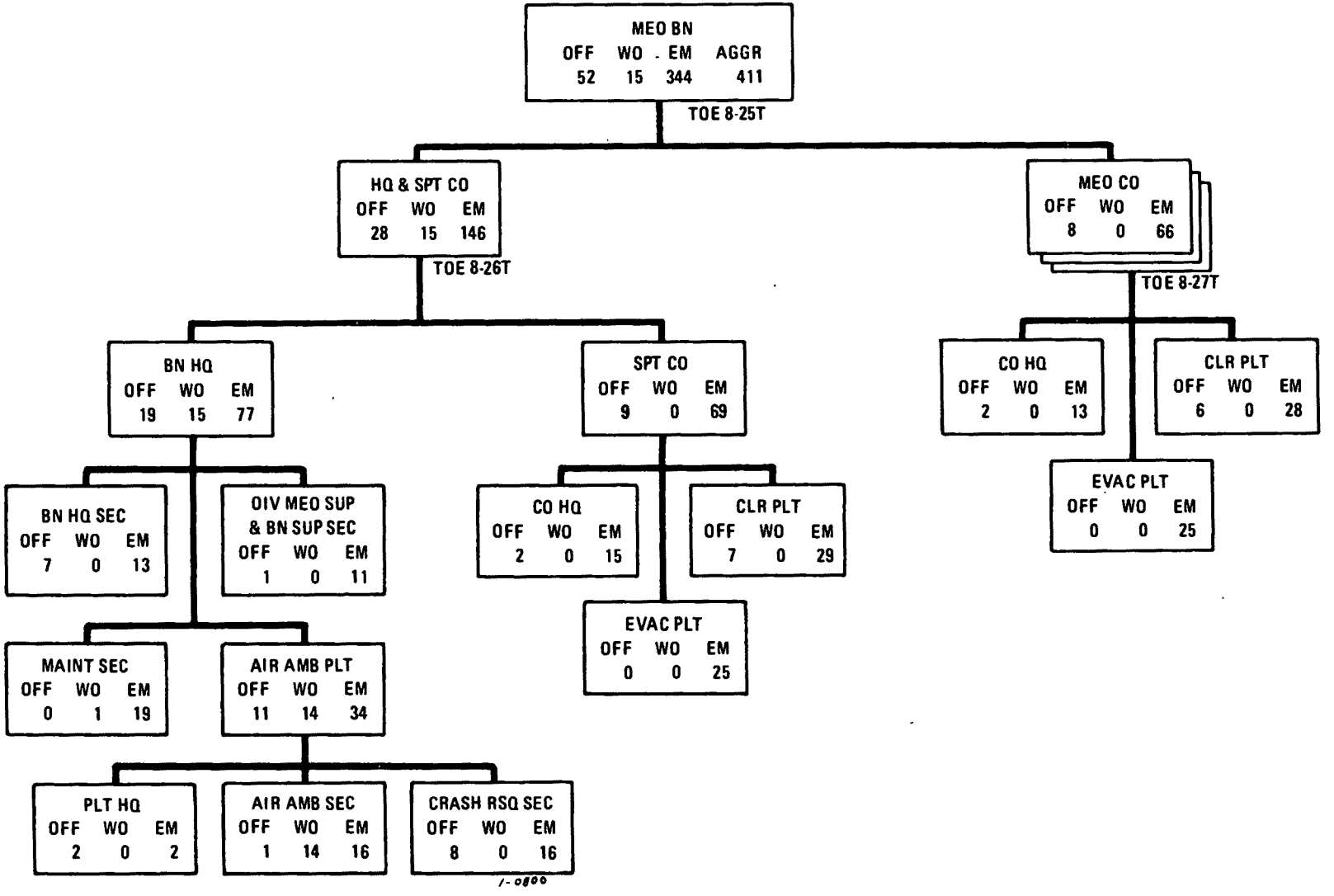

Figure 1–72. Medical battalion, support command, airmobile division.

1. MISSION

To provide division- and unit-level medical service, as required, to divisional units.

2. ASSIGNMENT

Organic to support command, airmobile division, TOE 29-41T.

3. CAPABILITIES

a. Provides aeromedical and limited ground evacuation.

b. Provides air crash rescue support on an area basis.

c. Performs clearing station treatment.

d. Manages psychiatric problems.

e. Provides unit-level medical service, as required, on an area basis.

f. Provides division-level medical supply and medical equipment maintenance support.

4. MOBILITY

One hundred-percent air transportable in Army and/or USAF aircraft.

TOE 8-26T HQ & SPT CO, MED BN

1. MISSION

a. To provide command, control, administration, and logistic support for the medical battalion and to plan for its employment.

b. To provide division-level medical service, as required, on an area basis to divisional units operating in the division base area.

2. ASSIGNMENT

Organic to medical battalion, support command, airmobile division, TOE 8-25T.

3. CAPABILITIES

a. Provides staff planning for medical battalion participation in providing medical support to division operations.

b. Commands, controls, and supervises division- and unit-level medical service rendered by elements of the medical battalion and attached units.

c. Provides division-level medical supply support and organizational medical equipment maintenance support for units organic or attached to the division.

d. Provides battalion-level organizational maintenance for aircraft, vehicles, and communication equipment of organic elements.

e. Performs divisionwide aeromedical evacuation; in-flight treatment of patients; and air delivery of whole blood, biologicals, medical supplies, and medical personnel.

f. Provides divisionwide air crash rescue support on an area basis.

g. Receives, sorts, and temporarily provides medical and surgical treatment for 60 patients. When the division generates an abnormally high patient workload, the clearing platoon can expand its facilities to accommodate 100 patients in its station for a limited period.

h. Manages psychiatric problems.

i. Performs emergency dental service for units operating in the division base area.

j. Provides unit-level medical service on an area basis to division base units having no organic medical element.

k. Support company elements may be used in an emergency to replace or augment medical company elements operating in support of brigades when the division base has been provided medical support by the next echelon of medical service.

4. MOBILITY

One hundred-percent air transportable in Army and/or USAF aircraft.

Figure 1-72—Continued

1. MISSION

To provide division- and unit-level medical service, as required, on an area basis to divisional units operating in the brigade area.

2. ASSIGNMENT

Organic to medical battalion, support command, airmobile division, TOE 8-25T.

3. CAPABILITIES

a. Receives, sorts, and temporarily provides medical and surgical treatment for 60 patients. When the division generates an abnormally high patient workload, the clearing platoon can expand its facilities to accommodate 100 patients for a limited period.

b. Provides emergency dental treatment.

c. Manages psychiatric problems.

d. Evacuates patients by organic ground ambulances.

e. Performs unit-level medical service on an area basis to divisional units having no organic medical element.

f. Provides intradivisional transportation of medical supplies, equipment, and personnel.

g. Depends on the division administration company, TOE 12-77T, for personnel administrative support.

4. MOBILITY

One hundred-percent air transportable in Army and/or USAF aircraft.

Figure 1-72—Continued

Table 1-48. Summary of Equipment—Support Command, Airmobile Division

1	2	3	4	5	6	7	8	9
LIN	Nomenclature	HHC & band (29-42T)	Admin co (12-77T)	Sup bn (29-95T)	Trans acft maint and sup bn (55-405T)	Med bn (8-25T)	Maint bn (29-85T)	DISCOM total (29-41T)
	CLASS 2A—AIR							
1 X23227	TRANSPORTER AIRMOBILE+ HYD LIFT FOR SHELTER AND X-4 CONTAINER.	0	0	0	110	2	0	112
	CLASS 2Q—GENERAL EQUIPMENT							
2 W98270	TRAILER PLATFORM WAREHOUSE+ 6000 LB CAP 108L×48W IN PNEUM.	0	0	6	0	0	0	6
3 Z13157	CARD PUNCH MACHINE+ ADPE	0	5	0	0	0	0	5
4 Z15494	COLLATOR+ ADPE	0	1	0	0	0	0	1
5 Z20571	DATA TRANSCEIVER CARD UNIT+ ADPE	0	1	0	0	0	0	1
6 Z20669	DATA TRANSMISSION EQUIPMENT+ ADPE.	0	1	0	0	0	0	1
7 Z35210	INTERPRETER+ ADPE	0	1	0	0	0	0	1
8 Z74660	SORTER+ ADPE	0	1	0	0	0	0	1
9 Z95673	VERIFIER+ ADPE	0	3	0	0	0	0	3
	CLASS 7A—AIR							
10 K30645	HELICOPTER OBSERVATION+ OH-6A	0	0	0	4	0	0	4
11 K31786	HELICOPTER UTILITY+ UH-1D	0	0	0	5	12	0	17
	CLASS 7B—GROUND SUPPORT							
12 E68694	COMP RCP PWR DRVN+ AIR REC AC 208-416V 60CY 3PH 15 CFM 175 PSI.	0	0	1	0	0	0	1
13 E69105	COMP RCP PWR DRVN+ AIR REC GAS DRVN 5 CFM 175 PSI.	0	0	0	0	0	7	7
14 F39172	CRANE WHEEL MTD+ 3 TON	0	0	0	8	0	1	9
15 F43077	CRANE WHL MTD+ 7 TON W/BOOM CRANE 24 FT W/BLK TKLE 9 FT.	0	0	1	0	0	0	1
16 J35835	GEN ST DSL ENG+ 15KW 60CY 3PH AC 120/208 240/416V SKID.	0	4	1	0	0	0	5
17 J36109	GEN ST DSL ENG+ 30KW 60CY 3PH AC 120/208 240/416V 50CY SKID.	0	1	0	0	0	0	1
18 J43233	GEN ST GAS ENG+ 0.5KW 3 WIRE DC 28V SHK.	0	0	0	0	3	0	3
19 J43918	GEN ST GAS ENG+ 1.5KW 60CY 1PH 2 WIRE AC 120V SHOCK.	0	3	1	0	5	5	14
20 J44055	GEN ST GAS ENG+ 1.5KW DC 28V SHOCK	6	0	4	0	0	0	10
21 J45699	GEN ST GAS ENG+ 3KW 60CY 1-3PH 120/240V 120/208V SKID SHOCK.	1	1	0	0	17	2	21
22 J47068	GEN ST GAS ENG+ 5KW 60CY 1-3PH AC 120 240 120/208V SKD-SHK MTD.	0	1	11	46	0	4	62
23 J48987	GEN ST GAS ENG+ 5KW DC 120V SKID	2	0	0	0	0	0	2
24 P90610	PUMP CENTRF+ GAS DRVN BASE MTD 1-1/2 IN 100 GPM.	0	0	32	12	0	0	44
25 W89557	TRACTOR WHEELED WAREHOUSE+ GAS 4000 LB.	0	0	2	0	0	0	2
26 X48846	TRUCK LIFT FORK AIRMBLE+ MULTI-FUEL 4000 LB CAP ROUGH TERRAIN.	0	0	1	0	0	0	1
27 X49051	TRUCK LIFT FORK+ DSL DRVN 10000 LB CAP ROUGH TERRAIN.	0	0	1	0	0	0	1
28 X52818	TRUCK LIFT FORK+ ROUGH TERRAIN 3000 LB.	0	0	25	8	0	1	34

Table 1-48. Summary of Equipment—Support Command, Airmobile Division—Continued

1	2	3	4	5	6	7	8	9
LIN	Nomenclature	HHC & band (29-42T)	Admin co (12-77T)	Sup bn (29-95T)	Trana acft maint and sup bn (55-405T)	Med bn (8-25T)	Maint bn (29-85T)	DISCOM total (29-41T)
	CLASS 7G—ELECTRONICS							
29 Q42092	RADIO SET+ AN/URC-10	0	0	0	9	12	0	21
30 Q50421	RADIO SET AN/VRC-24	5	0	0	4	1	0	10
31 Q53001	RADIO SET AN/VRC-46	13	0	8	28	0	3	52
32 Q54154	RADIO SET AN/VRC-47	3	0	2	9	10	9	33
33 Q55114	RADIO SET AN/VRC-49	2	0	0	0	0	0	2
34 U81707	SWITCHBOARD TELEPHONE MANUAL+ SB-22/PT.	0	0	2	10	1	6	19
35 U82529	SWITCHBOARD TELEPHONE MANUAL+ SB-993/GT.	0	1	0	0	0	0	1
36 V31211	TELEPHONE SET+ TA-312/PT	20	1	51	98	23	31	224
	CLASS 7K—TACTICAL VEHICLES							
37 E02807	CHASSIS TRAILER+ GENERATOR 2-1/2 TON 2 WHEEL W/E.	0	5	0	0	0	0	5
38 G34815	DOLLY SET LIFT TRANSPORTABLE SHELTER 5-1/4 TON W/E.	0	0	1	5	0	45	51
39 S72024	SEMITRAILER STAKE+ 12 TON 4 WHEEL W/E.	0	0	1	0	0	0	1
40 S74490	SEMITRAILER VAN+ EXPANSIBLE 6 TON 4 WHEEL W/E.	0	4	0	0	0	0	4
41 W93961	TRAILER AIRCRAFT CARGO LOADING-UNLOADING+ 3-1/2 TON 4 WHEEL W/E.	0	0	43	0	0	0	43
42 W95400	TRAILER CARGO+ 1/4 TON 2 WHEEL W/E.	11	9	14	50	16	13	113
43 W95537	TRAILER CARGO+ 3/4 TON 2 WHEEL W/E.	5	3	21	50	3	11	93
44 W95811	TRAILER CARGO+ 1-1/2 TON 2 WHEEL W/E.	0	0	22	0	2	3	27
45 W98825	TRAILER TANK+ WATER 400 GALLON 1-1/2 TON 2 WHEEL W/E.	1	2	1	0	0	1	5
46 X38639	TRUCK AMBULANCE+ 1/4 TON 4×4 W/E	0	0	0	0	12	0	12
47 X39735	TRUCK CARGO+ 3/4 TON 4×4 W/E	1	3	21	42	3	0	70
48 X39872	TRUCK CARGO+ 3/4 TON 4×4 W/WINCH W/E.	4	0	1	8	0	17	30
49 X40009	TRUCK CARGO+ 2-1/2 TON 6×6 W/E	0	2	37	0	1	1	41
50 X40146	TRUCK CARGO+ 2-1/2 TON 6×6 W/WINCH W/E.	1	1	3	0	2	3	10
51 X55627	TRUCK PLATFORM UTILITY+ 1/2 TON 4×4 W/E.	0	0	0	28	36	13	77
52 X57408	TRUCK TANK+ FUEL SERVICING 2-1/2 TON 6×6 W/WINCH W/E.	0	0	0	4	1	0	5
53 X59326	TRUCK TRACTOR+ 5 TON 6×6 W/E	0	0	1	0	0	0	1
54 X60833	TRUCK UTILITY+ 1/4 TON 4×4 W/E	11	9	14	50	16	13	113
55 X63094	TRUCK WRECKER+ 3/4 TON 4×4 W/E	0	0	0	0	0	5	5
56 X63162	TRUCK WRECKER+ 2-1/2 TON 6×6 W/ WINCH W/E.	0	0	0	0	0	2	2
	CLASS 7M—WEAPONS							
57 A90117	ARMAMENT SUBSYSTEM HELICOPTER 7.62 MILLIMETER MACHINE GUN+ LIGHT.	0	0	0	5	0	0	5
58 A90154	ARMAMENT SUBSYSTEM HELICOPTER 7.62MM MACHINE GUN+ HIGH RATE.	0	0	0	4	0	0	4

Table 1-48. Summary of Equipment—Support Command, Airmobile Division—Continued

1	2	3	4	5	6	7	8	9
LIN	Nomenclature	HHC & band (29-42T)	Admin co (12-77T)	Sup bn (29-95T)	Trans acft maint and sup bn (55-405T)	Med bn (8-25T)	Maint bn (29-85T)	DISCOM total (29-41T)
59 L44575	LAUNCHER GRENADE+ 40 MILLIMETER.	1	2	10	96	0	0	109
60 L45260	LAUNCHER ROCKET+ 3.5 INCH.....	1	6	12	10	0	6	35
61 L91975	MACHINE GUN CALIBER .50+ HB FLEXIBLE FOR GROUND USE.	0	4	0	0	0	0	4
62 L92386	MACHINE GUN 7.62 MILLIMETER+ LIGHT FLEXIBLE.	2	15	13	18	0	32	80
63 M75577	MOUNT TRIPOD MACHINE GUN+ HEAVY CALIBER 50.	0	4	0	0	0	0	4
64 M75714	MOUNT TRIPOD MACHINE GUN+ 7.62 MILLIMETER.	2	15	13	18	0	32	80
65 N96741	PISTOL CALIBER .45 AUTOMATIC+.....	25	16	10	104	31	7	193
66 R91244	REVOLVER CALIBER .38+ 4 INCH BARREL.	0	0	0	72	46	0	118
67 R94977	RIFLE 5.56 MILLIMETER+ W/E.....	135	363	470	1,250	304	327	2,849
	CLASS 7Q—GENERAL EQUIPMENT							
68 H48568	FILTER METER MODULE+ WITH FLOW DIVIDERS AND HOSE ASSEMBLIES.	0	0	32	12	0	0	44
69 J04716	FUEL SYSTEM SUPPLY POINT+ PORTABLE 6000 GAL CAP.	0	0	2	0	0	0	2
70 M66293	MONITOR LIQUID FUEL CONTAMINATION+ 50 GPM.	0	0	3	0	2	0	5
71 T10138	SHOP EQUIP CONTACT MAINT TRK MTD+.	0	0	0	0	0	1	1
72 V12141	TANK AND PUMP UNIT LIQUID DISPENSING TRUCKMOUNTING+.	0	0	2	0	0	0	2
73 V19950	TANK UNIT LIQUID DISPENSING TRAILER MOUNTING+.	0	0	2	0	0	0	2

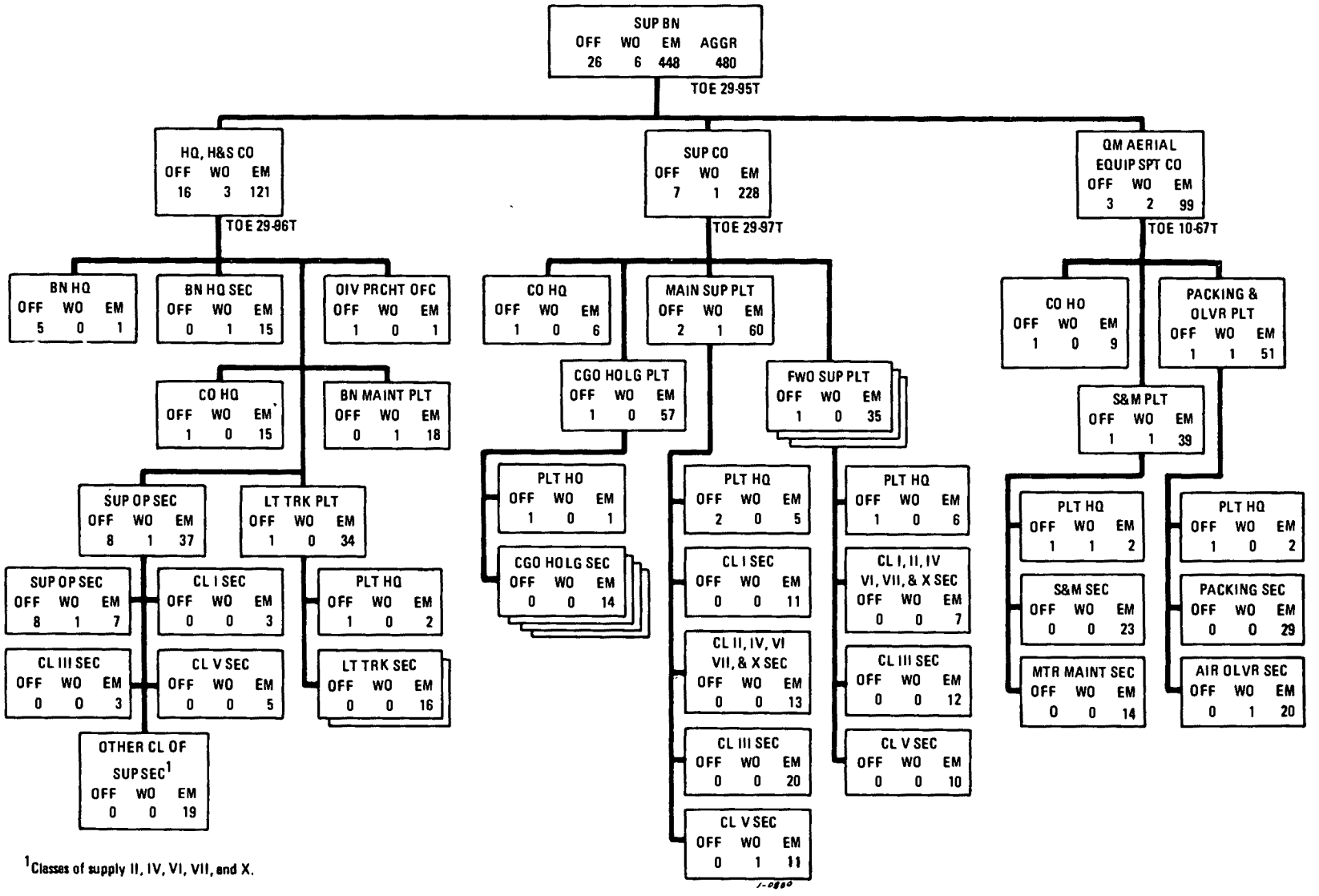

[1]Classes of supply II, IV, VI, VII, and X.

Figure 1–73. Supply battalion, support command, airmobile division.

1. MISSION

a. To provide all classes of supply, except for repair parts and medical and cryptographic supplies.

b. To maintain the division reserve of supplies for which responsible.

2. ASSIGNMENT

Organic to support command, airmobile division, TOE 29-41T.

3. CAPABILITIES

a. Receives, provides temporary storage for, and issues all classes of supplies and equipment, except for repair parts and medical and cryptographic supplies.

b. Operates supply and distribution points for the classes of supply handled in the airmobile division forward area and the airmobile brigade areas.

c. Operates the division rear area supply point for all classes of supply, except as indicated in a above.

d. Operates on a 24-hour basis.

e. Provides air delivery equipment support for the division.

f. Advises the division on food service matters.

g. Performs purchasing and contracting.

h. Depends on–

(1) The division administration company, TOE 12-77T, for personnel administrative support.

(2) Appropriate teams from TOE 10-500G for operation of a collecting point for abandoned materiel.

(3) Theater army for salvage service.

4. MOBILITY

One hundred-percent air transportable in Army and/or USAF aircraft.

TOE 29-96T HQ, H&S CO, SUP BN

1. MISSION

a. To provide command and administrative and technical supervision for the supply battalion.

b. To support the division by providing all classes of supply, except for repair parts and medical and cryptographic supplies.

c. To provide and operate motor transport for administrative and logistic support.

2. ASSIGNMENT

Organic to supply battalion, support command, airmobile division, TOE 29-95T.

3. CAPABILITIES

a. Provides the command element for the supply battalion.

b. Provides the division and DISCOM commanders advice on supply and service matters.

c. Determines requirement for, processes and maintains records on, and controls the allocation of all classes of supplies, except for repair parts and medical and cryptographic supplies.

d. Provides and operates limited motor transport within the division base of operations.

e. Provides vehicular materials-handling equipment and quartermaster air delivery equipment organizational maintenance for organic elements of the battalion.

f. Inspects and packs parachutes.

g. Depends on the division administration company, TOE 12-77T, for personnel administrative support.

4. MOBILITY

One hundred-percent air transportable in Army and/or USAF aircraft.

Figure 1-73—Continued

TOE 29-97T SUP CO, SUP BN

1. MISSION

a. To support the division and attached units by providing all classes of supply, except for repair parts, medical supplies, aircraft parts and supplies, cryptographic supplies, and air delivery equipment.

b. To provide and maintain the division reserve of supplies and equipment for which the unit is responsible.

2. ASSIGNMENT

Organic to supply battalion, support command, airmobile division, TOE 29-95T.

3. CAPABILITIES

a. Receives, provides temporary storage for, and issues all classes of supplies and equipment, except as indicated in paragraph 1a above.

b. Operates supply and distribution points for the classes of supply handled in the division base and brigade bases.

c. Receives and provides temporary storage for class III supplies. Under the direction of the division supply office, controls and supervises operation of the division class III transfer and distribution points, employment of bulk fuel containers used for unit distribution of class III supplies, operation of limited filling stations, and storage of the division reserve of bulk class III supplies.

d. Provides and maintains the division reserve of supplies and equipment for which the unit is responsible.

e. Provides map supply service for the division.

f. Distributes water, as required.

g. Operates on a 24-hour basis.

h. Depends on–

(1) Teams assigned from TOE 10-500G for salvage service.

(2) The battalion HQ, H&S company, TOE 29-96T, for mess and maintenance support.

(3) The division administration company, TOE 12-77T, for personnel administrative support.

(4) Nondivisional theater service support units for supplemental supply and service support when employed in garrison, in marshaling area or areas, or for an extended period in support of sustained ground combat operations.

4. MOBILITY

One hundred-percent air transportable in Army and/or USAF aircraft.

TOE 10-67T QM AERIAL EQUIP SPT CO, SUP BN

1. MISSION

To support the airmobile division by providing for–

a. Requisition, inspection, packing, storage, maintenance, and issue of air delivery equipment required for air delivery of personnel, supplies, and equipment.

b. Inspection and technical assistance in packing, rigging, and loading supplies and equipment.

2. ASSIGNMENT

Organic to supply battalion, support command, airmobile division, TOE 29-95T.

3. CAPABILITIES

a. Requisitions, receives, stores, and issues quartermaster air delivery equipment.

b. Inspects and packs parachutes.

c. Inspects and provides technical assistance in packing, rigging, and loading supplies and equipment.

d. Provides limited organizational maintenance for quartermaster air delivery equipment.

e. Provides a pool for air delivery equipment for the division.

f. Depends on the division administration company, TOE 12-77T, for personnel administrative support.

4. MOBILITY

One hundred-percent air transportable in Army and/or USAF aircraft.

Figure 1-73—Continued

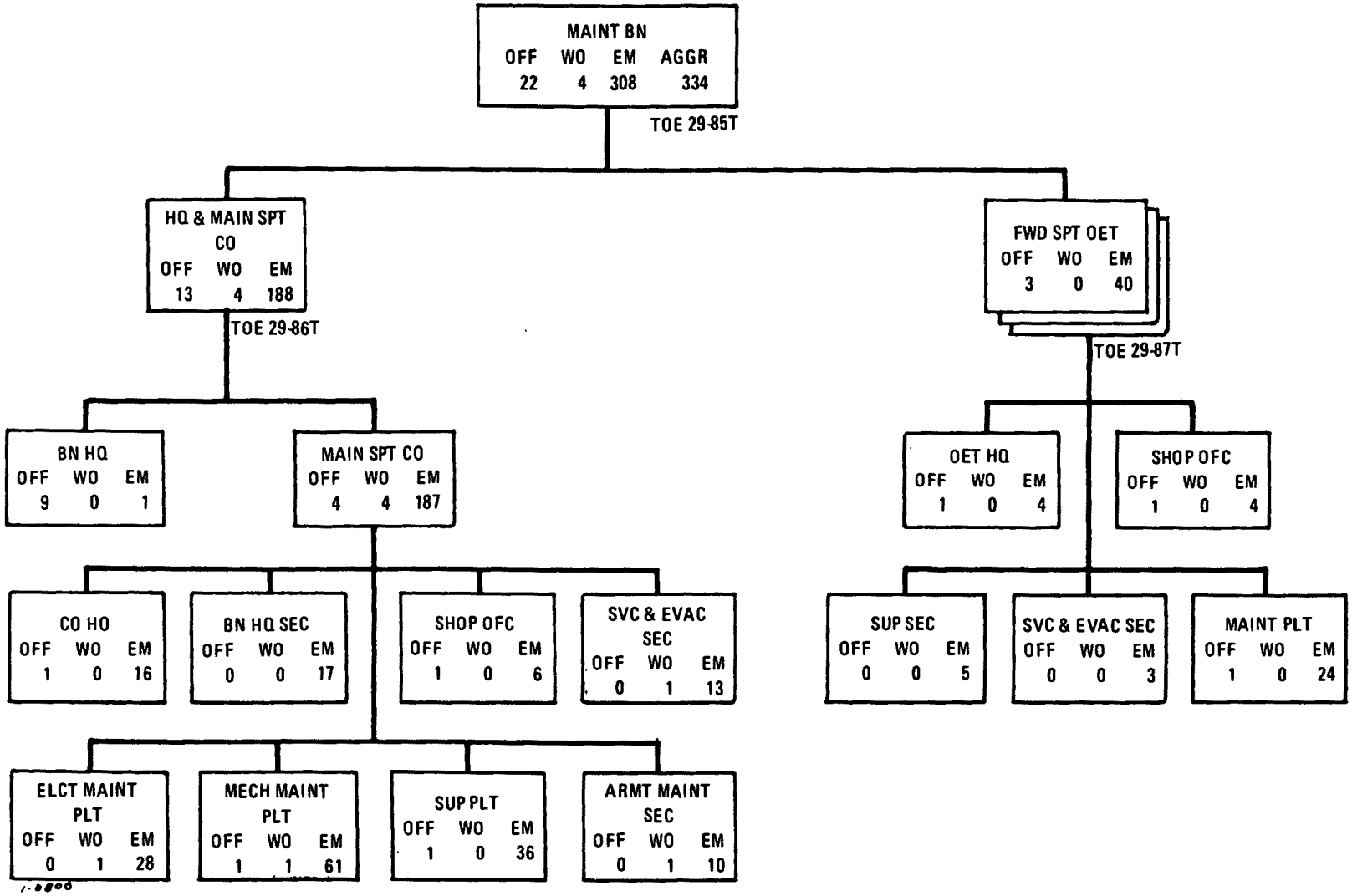

Figure 1–74. Maintenance battalion, support command, airmobile division.

TOE 29-85T MAINT BN

1. MISSION

To provide direct support supply and maintenance for all units of the division for equipment, except for aircraft; aircraft armament and avionic equipment; and medical, cryptographic, and quartermaster air items.

2. ASSIGNMENT

Organic to support command, airmobile division, TOE 29-41T.

3. CAPABILITIES

a. Accomplishes approximately 80 percent of the direct support maintenance workload of the division.

b. Secures, stocks, and issues repair parts for supported equipment of the division.

c. Maintains an operational readiness float of selected end items.

d. Provides limited evacuation assistance to supported units.

e. Provides technical assistance service for the division.

f. Depends on, or will be attached to, other units for medical, dental, personnel administrative, and religious services.

4. MOBILITY

One hundred-percent air transportable in Army and/or USAF aircraft.

TOE 29-86T HQ AND MAIN SPT CO, MAINT BN

1. MISSION

a. To provide command, administration, and technical supervision of the maintenance battalion, airmobile division.

b. To provide direct support supply and maintenance service (except medical, cryptographic, aircraft, and aircraft armament) for the division base elements.

c. To serve as the base of supply for repair parts within the maintenance battalion.

d. To provide supplementary maintenance support for the three forward support detachments.

2. ASSIGNMENT

Organic to maintenance battalion, support command, airmobile division, TOE 29-85T.

3. CAPABILITIES

a. Plans and directs all direct support maintenance activities for all maintainable equipment of the division, except medical, cryptographic, and aircraft.

b. Provides direct support and technical assistance service to the base elements of the division.

c. Provides evacuation assistance to supported units.

d. Maintains the major portion of repair parts and maintenance supplies.

e. Maintains an operational readiness float of end items, as authorized.

f. Depends on other units for medical, dental, personnel administrative, and religious services.

4. MOBILITY

One hundred-percent air transportable in Army and/or USAF aircraft.

TOE 29-87T FWD SPT DET, MAINT BN

1. MISSION

To provide direct support supply and maintenance service for all equipment (except medical, cryptographic, aircraft, and aircraft armament) for one airmobile brigade and other units located in the brigade area.

2. ASSIGNMENT

Organic to maintenance battalion, support command, airmobile division, TOE 29-85T.

3. CAPABILITIES

a. Provides direct support supply and maintenance and technical assistance to one airmobile division brigade and to other units located in the brigade area.

b. Assists supported units in the recovery of materiel to the extent permitted by mission priorities and personnel and equipment limitations. Arranges for the evacuation of materiel, as necessary, to the main support company.

c. Maintains a limited stock of repair parts for issue to supported units.

d. Operates the maintenance collecting point in the brigade area.

e. Depends on other units for medical, dental, religious, personnel administrative, and messing support.

4. MOBILITY

One hundred-percent air transportable in Army and/or USAF aircraft.

Figure 1-74—Continued

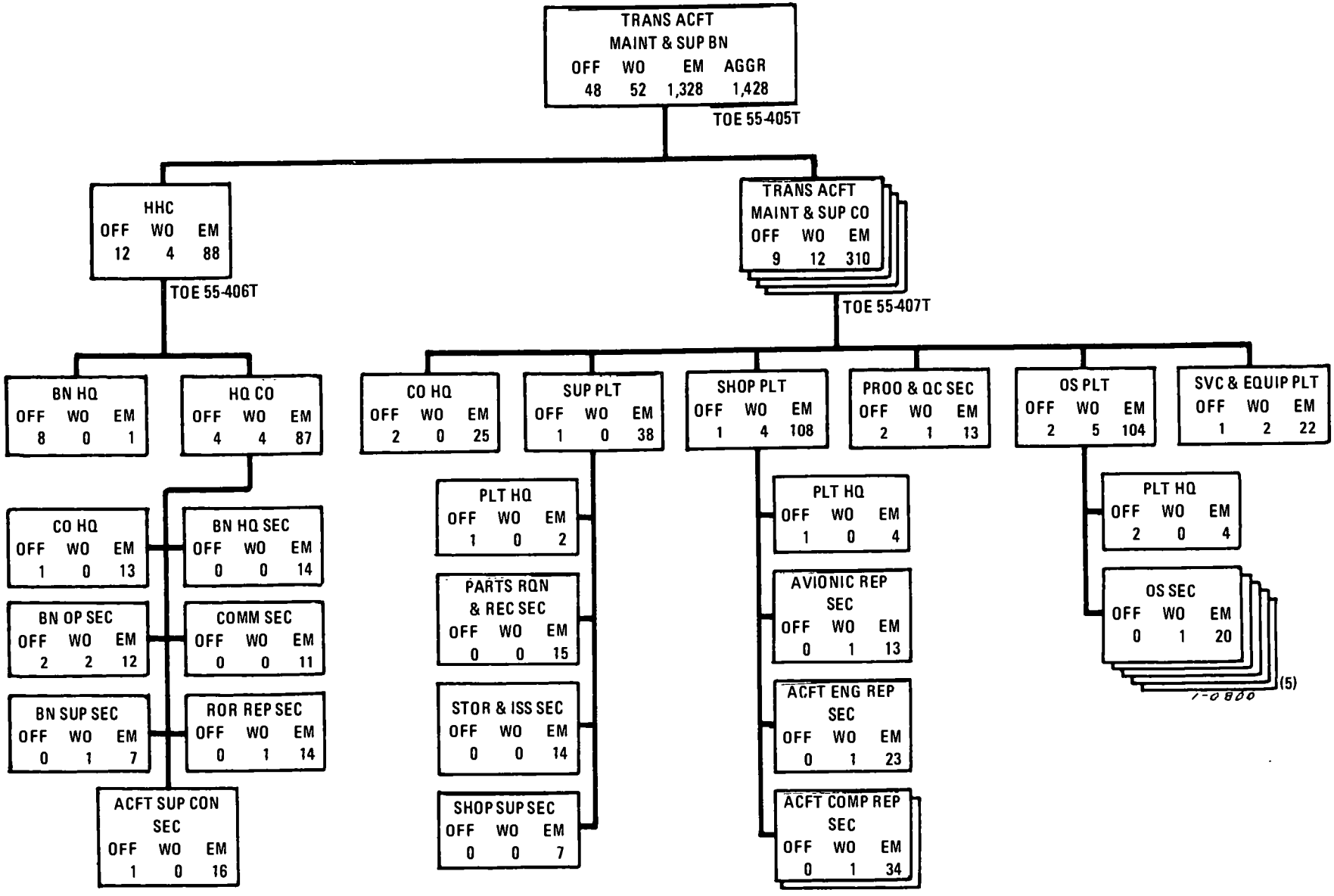

Figure 1–75. Transportation aircraft maintenance and supply battalion, support command, airmobile division.

TOE 55-405T TRANS ACFT MAINT AND SUP BN

1. MISSION

To provide aircraft direct support maintenance, to include avionic and armament maintenance, and repair parts support for aircraft organic to the airmobile division.

2. ASSIGNMENT

Organic to support command, airmobile division, TOE 29-41T.

3. CAPABILITIES

a. Accomplishes approximately 95 percent of the aircraft, aircraft armament, and avionic direct support maintenance required for aircraft organic to the airmobile division. This maintenance capability includes–

(1) 137,360 man-hours per month for aircraft support maintenance.

(2) 9,696 man-hours per month for avionic support maintenance.

(3) 3,232 man-hours per month for aircraft armament system support maintenance.

b. Provides repair parts supply to supported units.

c. Depends on the division administration company, TOE 12-77T, for personnel administrative support.

4. MOBILITY

Mobility of units organic to this battalion is included in appropriate component TOE extracts.

TOE 55-406T HHC, TRANS ACFT MAINT AND SUP BN

1. MISSION

To provide command, control, staff planning, and supervision of assigned or attached aircraft maintenance and supply companies.

2. ASSIGNMENT

Organic to transportation aircraft maintenance and supply battalion, support command, airmobile division, TOE 55-405T.

3. CAPABILITIES

a. Provides command, control, staff planning, and administrative supervision for from two to five aircraft maintenance and supply companies.

b. Provides supervision for subordinate units in matters of administration, supply, maintenance, training, and communications.

c. Provides battalion communication system, including wire and radio.

d. Provides a radar repair section that is attached to a subordinate company for operational control.

e. Depends on one of the attached companies for motor maintenance facilities and on the division administration company, TOE 12-77T, for personnel administrative support.

4. MOBILITY

a. Twenty-five-percent mobile in organic transportation.

b. One hundred-percent air transportable in Army and/or USAF aircraft.

TOE 55-407T TRANS ACFT MAINT AND SUP CO, TRANS ACFT MAINT AND SUP BN

1. MISSION

To provide aircraft direct support maintenance, to include avionic and aircraft armament maintenance, and repair parts support for aircraft organic to an airmobile division.

2. ASSIGNMENT

Organic to transportation aircraft maintenance and supply battalion, support command, airmobile division, TOE 55-405T.

3. CAPABILITIES

a. Provides 34,340 man-hours per month for aircraft support maintenance, including direct support aircraft maintenance, to division aviation units.

b. Provides 2,424 man-hours per month for maintenance support of avionic equipment.

c. Provides 808 man-hours per month for maintenance support of aircraft armament systems.

d. Furnishes repair parts to supported units.

e. Depends on the division administration company, TOE 12-77T, for personnel administrative support.

4. MOBILITY

a. Approximately 5-percent mobile in organic transportation.

b. One hundred-percent air transportable in Army and/or USAF aircraft.

Figure 1–75—Continued

Table 1-49. Summary of Equipment—Medical Battalion, Support Command, Airmobile Division

1	2	3	4	5	6
LIN	Nomenclature	HQ & spt co (8-26T)	3 med co (8-27T)		Bn total (8-25T)
			(1)	(3)	
	CLASS 2A—AIR				
1 X23227	TRANSPORTER AIRMOBILE+ HYD LIFT—FOR SHELTER AND X-4 CONTAINER.	2	0	0	2
	CLASS 7A—AIR				
2 K31786	HELICOPTER UTILITY+ UH-1D	12	0	0	12
	CLASS 7B—GROUND SUPPORT				
3 J43233	GEN ST GAS ENG+ 0.5KW 2 WIRE DC-28V SHK	0	1	3	3
4 J43918	GEN ST GAS ENG+1.5KW 60CY 1PH 2 WIRE AC 120V SHOCK	5	0	0	5
5 J45699	GEN ST GAS ENG+ 3KW 60CY 1-3PH 120/240V 120/208V SKID SHOCK.	5	4	12	17
	CLASS 7G—ELECTRONICS				
6 Q42092	RADIO SET+AN/URC-10	12	0	0	12
7 Q05421	RADIO SET AN/VRC-24	1	0	0	1
8 Q54154	RADIO SET AN/VRC-47	4	2	6	10
9 U81707	SWITCHBOARD TELEPHONE MANUAL+ SB-22/PT	1	0	0	1
10 V31211	TELEPHONE SET+ TA-312/PT	11	4	12	23
	CLASS 7K—TACTICAL VEHICLES				
11 W95400	TRAILER CARGO+ 1/4 TON 2 WHEEL W/E	7	3	9	16
12 W95537	TRAILER CARGO+ 3/4 TON 2 WHEEL W/E	3	0	0	3
13 W95811	TRAILER CARGO+ 1-1/2 TON 2 WHEEL W/E	2	0	0	2
14 X38639	TRUCK AMBULANCE+ 1/4 TON 4×4 W/E	12	0	0	12
15 X39735	TRUCK CARGO+ 3/4 TON 4×4 W/E	3	0	0	3
16 X40009	TRUCK CARGO+ 2-1/2 TON 6×6 W/E	1	0	0	1
17 X40146	TRUCK CARGO+ 2-1/2 TON 6×6 W/WINCH W/E	2	0	0	2
18 X55627	TRUCK PLATFORM UTILITY+ 1/2 TON 4×4 W/E	0	12	36	36
19 X57408	TRUCK TANK+ FUEL SERVICING 2-1/2 TON 6×6 W/ WINCH W/E.	1	0	0	1
20 X60833	TRUCK UTILITY+ ¼-TON 4×4 W/E	7	3	9	16
	CLASS 7M—WEAPONS				
21 N96741	PISTOL CALIBER .45 AUTOMATIC+	10	7	21	31
22 R91244	REVOLVER CALIBER .38+ 4 INCH BARREL	46	0	0	46
23 R94977	RIFLE 5.56 MILLIMETER+ W/E	106	66	198	304
	CLASS 7Q—GENERAL EQUIPMENT				
24 M66293	MONITOR LIQUID FUEL CONTAMINATION+ 50 GPM	2	0	0	2

Table 1-50. Summary of Equipment—Supply Battalion, Support Command, Airmobile Division

1	2	3	4	5	6
LIN	Nomenclature	HQ, H&S co (29-96T)	Sup co (29-97T)	QM aerial equip spt co (10-67T)	Bn total (29-95T)
	CLASS 2Q—GENERAL EQUIPMENT				
1 W98270	TRAILER PLATFORM WAREHOUSE+ 6000 LB CAP 108L X 48W IN PNEUM.	0	0	6	6
	CLASS 7B—GROUND SUPPORT				
2 E68694	COMP RCP PWR DRVN+AIR REC AC 208/416V 60 CY 3 PH 15 CFM 175 PSI.	0	0	1	1
3 F43077	CRANE WHL MTD+ 7 TON W/BOOM CRANE 24 FT W/BLK TKLE 9 FT.	0	0	1	1
4 J35835	GEN ST DSL ENG+ 15KW 60CY 3PH AC 120/208 240/416V SKID.	0	0	1	1
5 J43918	GEN ST GAS ENG+ 1.5KW 60CY 1PH 2 WIRE AC 120V SHOCK.	0	0	1	1
6 J44055	GEN ST GAS ENG+ 1.5KW DC 28V SHOCK	1	3	0	4
7 J47068	GEN ST GAS ENG+ 5KW 60CY 1-3PH AC 120/240 120/208V SKD-SHK MTD.	4	6	1	11
8 P90610	PUMP CENTRF+ GAS DRVN BASE MTD 1 1/2 IN 100 GPM	0	32	0	32
9 W89557	TRACTOR WHEELED WAREHOUSE+ GAS 4000 LB	0	0	2	2
10 X48846	TRUCK LIFT FORK AIRMBLE+ MULTIFUEL 4000 LB CAP ROUGH TERRAIN.	0	0	1	1
11 X49051	TRUCK LIFT FORK+ DSL DRVN 10000 LB CAP ROUGH TERRAIN.	0	0	1	1
12 X52818	TRUCK LIFT FORK+ ROUGH TERRAIN 3000 LB	0	25	0	25
	CLASS 7G—ELECTRONICS				
13 Q53001	RADIO SET AN/VRC-46	3	4	1	8
14 Q54154	RADIO SET AN/VRC-47	2	0	0	2
15 U81707	SWITCHBOARD TELEPHONE MANUAL+ SB-22/PT	2	0	0	2
16 V31211	TELEPHONE SET+ TA-312/PT	17	29	5	51
	CLASS 7K—TACTICAL VEHICLES				
17 G34815	DOLLY SET LIFT TRANSPORTABLE SHELTER+ 5-1/4-TON W/E.	0	1	0	1
18 S72024	SEMITRAILER STAKE+ 12-TON 4 WHEEL W/E	0	0	1	1
19 W93961	TRAILER AIRCRAFT CARGO LOADING-UNLOADING+ 3-1/2-TON 4 WHEEL W/E.	0	43	0	43
20 W95400	TRAILER CARGO+ 1/4-TON 2 WHEEL W/E	7	4	3	14
21 W95537	TRAILER CARGO+ 3/4-TON 2 WHEEL W/E	4	15	2	21
22 W95811	TRAILER CARGO+ 1-1/2-TON 2 WHEEL W/E	20	0	2	22
23 W98825	TRAILER TANK+ WATER 400 GALLON 1-1/2 TON 2 WHEEL W/E.	1	0	0	1
24 X39735	TRUCK CARGO+ 3/4 TON 4×4 W/E	5	15	1	21
25 X39872	TRUCK CARGO+ 3/4 TON 4×4 W/WINCH W/E	0	0	1	1
26 X40009	TRUCK CARGO+2-1/2 TON 6×6 W/E	19	0	18	37
27 X40146	TRUCK CARGO+ 2-1/2 TON 6×6 W/WINCH W/E	3	0	0	3
28 X59326	TRUCK TRACTOR+ 5 TON 6×6 W/E	0	0	1	1
29 X60833	TRUCK UTILITY+ 1/4 TON 4×4 W/E	7	4	3	14
	CLASS 7M—WEAPONS				
30 L44575	LAUNCHER GRENADE+ 40 MILLIMETER	4	6	0	10
31 L45260	LAUNCHER ROCKET+ 3.5 INCH	3	8	1	12
32 L92386	MACHINE GUN 7.62 MILLIMETER+ LIGHT FLEXIBLE	4	9	0	13
33 M75714	MOUNT TRIPOD MACHINE GUN+ 7.62 MILLIMETER	4	9	0	13
34 N96741	PISTOL CALIBER .45 AUTOMATIC+	8	1	1	10
35 R94977	RIFLE 5.56 MILLIMETER+ W/E	132	235	103	470

Table 1-50. Summary of Equipment—Supply Battalion, Support Command, Airmobile Division—Continued

1	2	3	4	5	6
LIN	Nomenlcature	HQ, H&S co (29–96T)	Sup co (29–97T)	QM aerial equip spt co (10–67T)	Bn total (29–95T)
	CLASS 7Q—GENERAL EQUIPMENT				
36 H48568	FILTER METER MODULE+ WITH FLOW DIVIDERS AND HOSE ASSEMBLIES.	0	32	0	32
37 J04716	FUEL SYSTEM SUPPLY POINT+ PORTABLE 6000 GAL CAP.	0	2	0	2
38 M66293	MONITOR LIQUID FUEL CONTAMINATION+ 50 GPM	0	3	0	3
39 V12141	TANK AND PUMP UNIT LIQUID DISPENSING TRUCK-MOUNTING+.	2	0	0	2
40 V19950	TANK UNIT LIQUID DISPENSING TRAILER MOUNTING+.	2	0	0	2

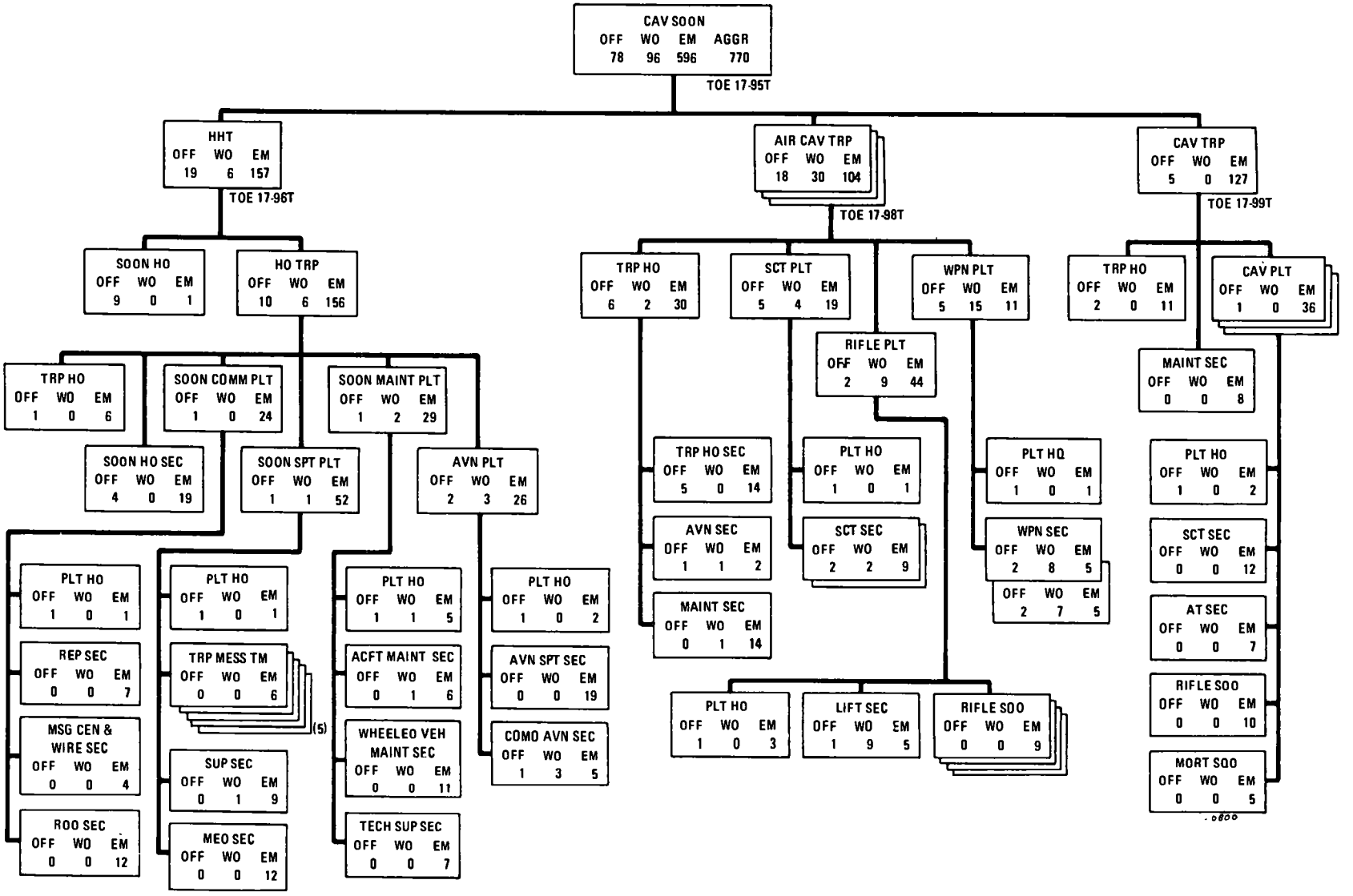

Figure 1–76. Cavalry squadron, airmobile division.

1. MISSION

To perform reconnaissance, to provide security for the division or its major subordinate combat elements, to engage in combat as an economy-of-force unit, and to provide limited air and ground antitank defense for the division.

2. ASSIGNMENT

Organic to airmobile division, TOE 67T.

3. CAPABILITIES

a. Performs air and ground reconnaissance and provides security for the unit to which assigned or attached.

b. Conducts offensive, defensive, or delaying combat operations, as required.

c. Provides limited air and ground antitank defense for the unit to which assigned or attached.

d. Defends its base of operations with organic personnel.

e. Depends on DISCOM for logistic support and on the division administration company, TOE 12-77T, for personnel administrative support.

4. MOBILITY

a. One hundred-percent mobile in organic transportation.

b. One hundred-percent air transportable in Army and/or USAF aircraft.

TOE 17-96T HHT, CAV SQDN

1. MISSION

To furnish command, administration, supply, mess, and squadron-level maintenance for the cavalry squadron, airmobile division.

2. ASSIGNMENT

Organic to cavalry squadron, airmobile division, TOE 17-95T.

3. CAPABILITIES

a. Commands, controls, provides staff planning, furnishes communications, and supervises operations for organic and attached units.

b. Furnishes supply, mess, transportation, and organizational maintenance for organic and attached units.

c. Provides unit-level medical service, to include medical care and evacuation for the cavalry squadron. The medical section establishes a squadron aid station and provides aidmen to organic troops.

d. Provides air vehicles for command, control, and liaison by the commander and his staff.

e. Depends on–

(1) The DISCOM for required additional logistic support.

(2) The division administration company, TOE 12-77T, for personnel administrative support.

(3) Collocation with combat troops of the squadron for local security during combat operations.

4. MOBILITY

a. One hundred-percent mobile in organic transportation.

b. One hundred-percent air transportable in Army and/or USAF aircraft.

Figure 1-76—Continued

TOE 17-98T AIR CAV TRP, CAV SQDN

1. MISSION

To perform reconnaissance, to provide security for designated major combat elements, to engage in combat as an economy-of-force unit, and to provide limited air antitank defense for elements of the division.

2. ASSIGNMENT

Organic to cavalry squadron, airmobile division, TOE 17-95T.

3. CAPABILITIES

a. Performs air and ground reconnaissance and provides security for the unit to which assigned or attached.

b. Conducts offensive, defensive, or delaying combat operations, as required.

c. Provides limited air antitank defense for the unit to which assigned or attached.

d. Defends the perimeter of its base of operations with organic personnel.

e. Depends on the squadron HHT for mess and medical support and on the division administration company, TOE 12-77T, for personnel administrative support.

4. MOBILITY

a. One hundred-percent mobile in organic transportation.

b. One hundred-percent air transportable in Army and/or USAF aircraft.

TOE 17-99T CAV TRP, CAV SQDN

1. MISSION

To perform reconnaissance, to provide security for designated major combat elements of the division, to engage in combat as an economy-of-force unit; and to provide limited ground antitank defense for elements of the division.

2. ASSIGNMENT

Organic to cavalry squadron, airmobile division, TOE 17-95T.

3. CAPABILITIES

a. Performs reconnaissance and provides security for the unit to which assigned or attached.

b. Conducts offensive, defensive, or delaying operations, as required.

c. Provides limited ground antitank defense for the unit to which assigned or attached.

d. Performs troop-level organizational maintenance on organic equipment.

e. Defends the perimeter of its base of operations with organic personnel.

f. Depends on the squadron HHT for mess and medical support and on the division administration company, TOE 12-77T, for personnel administrative support.

4. MOBILITY

a. One hundred-percent mobile in organic transportation.

b. One hundred-percent air transportable in Army and/or USAF aircraft.

Figure 1-76—Continued

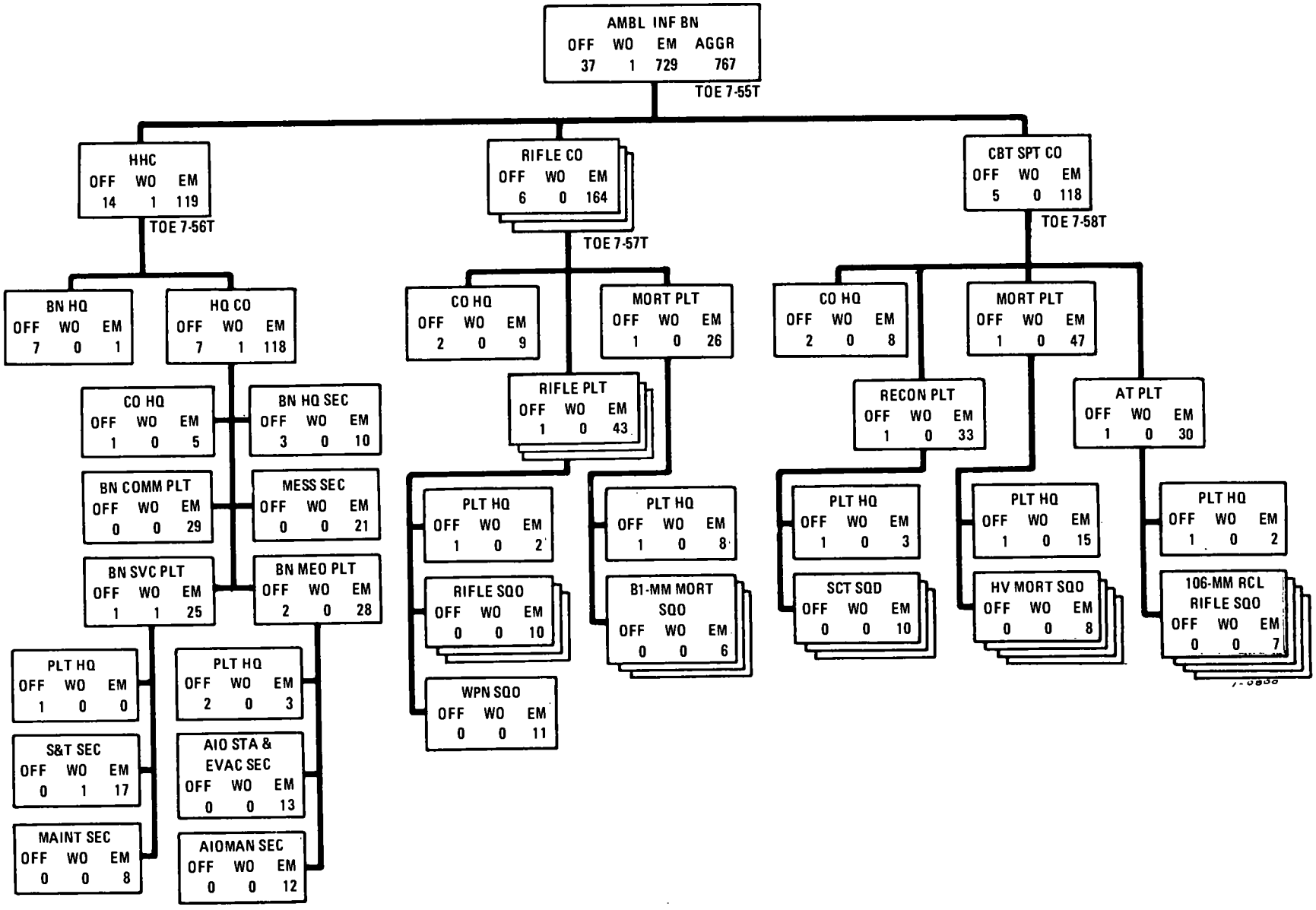

Figure 1–77. Infantry battalion, airmobile division.

TOE 7-55T INF BN, AMBL DIV

1. MISSION

To close with the enemy by means of fire and maneuver to destroy or capture him or to repel his assault by fire, close combat, and counterattack.

2. ASSIGNMENT

Organic to airmobile division, TOE 67T.

3. CAPABILITIES

a. Closes with the enemy by means of fire and maneuver to capture or destroy him.

b. Repels enemy assault by fire, close combat, and counterattack.

c. Provides a base of fire and maneuver elements.

d. Seizes and controls terrain for limited periods of time.

e. Conducts independent operations on a limited scale.

f. Provides communications, reconnaissance, indirect fire, antitank fire, and limited logistic support.

g. Conducts long-range patrolling.

h. Participates in airmobile operations.

i. Maneuvers in all types of terrain and under all climatic conditions.

j. Depends on higher HQ for airmobility and combat service support and on the division administration company, TOE 12-77T, for personnel administrative support.

4. MOBILITY

One hundred-percent air transportable in Army and/or USAF aircraft.

TOE 7-56T HHC, INF BN, AMBL DIV

1. MISSION

To provide command, staff supervision, communications, medical, and limited combat service support for the infantry battalion, airmobile division.

2. ASSIGNMENT

Organic to infantry battalion; airmobile division, TOE 7-55T.

3. CAPABILITIES

a. Provides command, control, staff planning, and supervision of operations of organic and attached elements of the infantry battalion, airmobile division.

b. Provides limited combat service support for assigned and attached units.

c. Provides communications to higher and subordinate HQ.

d. Maneuvers in all types of terrain.

e. Provides unit-level medical treatment and evacuation for assigned and attached units.

f. Provides organizational maintenance for all assigned vehicles.

g. Provides mess facilities for all assigned units.

h. Depends on the division administration company, TOE 12-77T, for personnel administrative support.

4. MOBILITY

One hundred-percent air transportable in Army and/or USAF aircraft.

Figure 1-77—Continued

TOE 7-57T RIFLE CO, AMBL DIV

1. MISSION

To close with the enemy by means of fire and maneuver to destroy or capture him or to repel his assault by fire, close combat, and counterattack.

2. ASSIGNMENT

Organic to infantry battalion, airmobile division, TOE 7-55T.

3. CAPABILITIES

a. Closes with the enemy by means of fire and maneuver to destroy or capture him.

b. Repels enemy assault by fire, close combat, and counterattack.

c. Provides a base of fire and maneuver elements.

d. Seizes and holds terrain.

e. Maneuvers in all types of terrain and under all climatic conditions.

f. Capitalizes on all forms of mobility.

g. Conducts airmobile operations.

h. Conducts long-range patrolling.

i. Depends on the division administration company, TOE 12-77T, for personnel administrative support and on HHC, infantry battalion, TOE 7-56T, for mess facilities.

4. MOBILITY

One hundred-percent air transportable in Army and/or USAF aircraft.

TOE 7-58T CBT SPT CO, AMBL DIV

1. MISSION

To provide reconnaissance, indirect fire support, and antitank support for the infantry battalion, airmobile division.

2. ASSIGNMENT

Organic to infantry battalion, airmobile division, TOE 7-55T.

3. CAPABILITIES

a. Provides reconnaissance, indirect fire, and direct fire.

b. Maneuvers in all types of terrain and under all climatic conditions.

c. Participates in airmobile operations.

d. Performs company-level maintenance on organic equipment.

e. Depends on–

(1) Higher HQ for airmobility and combat service support.

(2) The division administration company, TOE 12-77T, for personnel administrative support.

(3) HHC, infantry battalion, TOE 7-56T, for mess facilities.

4. MOBILITY

One hundred-percent air transportable in Army and/or USAF aircraft.

Figure 1-77—Continued

Table 1-51. Summary of Equipment—Maintenance Battalion, Support Command, Airmobile Division

1	2	3	4	5	6
LIN	Nomenclature	HQ & main spt co (29-86T)	3 fwd spt det (29-87T)		Bn total (29-85T)
			(1)	(3)	
	CLASS 7B—GROUND SUPPORT				
1 E69105	COMP RCP PWR DRVN + AIR REC GAS DRVN 5 CFM 175 PSI.	4	1	3	7
2 F39172	CRANE WHEEL MTD + 3 TON	1	0	0	1
3 J43918	GFN ST GAS ENG +1.5KW 60CY 1PH 2 WIRE AC 120V SHOCK	2	1	3	5
4 J45699	GEN ST GAS ENG + 3KW 60CY 1-3PH 120/240V 120/208V SKID SHOCK.	2	0	0	2
5 J47068	GEN ST GAS ENG + 5KW 60CY 1-3PH AC 120/240 120/208V SKD-SHK MTD.	4	0	0	4
6 X52818	TRUCK LIFT FORK + ROUGH TERRAIN 3000 LB	1	0	0	1
	CLASS 7G—ELECTRONICS				
7 Q53001	RADIO SET AN/VRC-46	3	0	0	3
8 Q54154	RADIO SET AN/VRC-47	3	2	6	9
9 U81707	SWITCHBOARD TELEPHONE MANUAL + SB-22/PT	3	1	3	6
10 V31211	TELEPHONE SET + TA-312/PT	19	4	12	31
	CLASS 7K—TACTICAL VEHICLES				
11 G34815	DOLLY SET LIFT TRANSPORTABLE SHELTER + 5-1/4 TON W/E.	27	6	18	45
12 W95400	TRAILER CARGO + 1/4 TON 2 WHEEL W/E	7	2	6	13
13 W95537	TRAILER CARGO + 3/4 TON 2 WHEEL W/E	8	1	3	11
14 W95811	TRAILER CARGO + 1-1/2 TON 2 WHEEL W/E	3	0	0	3
15 W98825	TRAILER TANK + WATER 400 GALLON 1-1/2 TON 2 WHEEL W/E.	1	0	0	1
16 X39872	TRUCK CARGO + 3/4 TON 4×4 W/WINCH W/E	8	3	9	17
17 X40009	TRUCK CARGO + 2-1/2 TON 6×6 W/E	1	0	0	1
18 X40146	TRUCK CARGO + 2-1/2 TON 6×6 W/WINCH W/E	3	0	0	3
19 X55627	TRUCK PLATFORM UTILITY + 1/2 TON 4×4 W/E	1	4	12	13
20 X60833	TRUCK UTILITY + 1/4 TON 4×4 W/E	7	2	6	13
21 X63094	TRUCK WRECKER + 3/4 TON 4×4 W/E	2	1	3	5
22 X63162	TRUCK WRECKER + 2-1/2 TON 6×6 W/WINCH W/E	2	0	0	2
	CLASS 7M—WEAPONS				
23 L45260	LAUNCHER ROCKET + 3.5 INCH	3	1	3	6
24 L92386	MACHINE GUN 7.62 MILLIMETER + LIGHT FLEXIBLE	5	9	27	32
25 M75714	MOUNT TRIPOD MACHINE GUN + 7.62 MILLIMETER	5	9	27	32
26 N96741	PISTOL CALIBER .45 AUTOMATIC +	4	1	3	7
27 R94977	RIFLE 5.56 MILLIMETER + W/E	201	42	126	327
	CLASS 7Q—GENERAL EQUIPMENT				
28 T10138	SHOP EQUIP CONTACT MAINT TRK MTD	1	0	0	1

Table 1–52. Summary of Equipment—Transportation Aircraft Maintenance and Supply Battalion, Support Command, Airmobile Division

1	2	3	4	5	6
LIN	Nomenclature	HHC (55–406T)	4 trans acft maint and sup co (55–407T)		Bn total (55–405T)
			(1)	(4)	
	CLASS 2A—AIR				
1 X23227	TRANSPORTER AIRMOBILE + HYD LIFT—FOR SHELTER AND X–4 CONTAINER.	10	25	100	110
	CLASS 7A—AIR				
2 K30645	HELICOPTER OBSERVATION + OH–6A	0	1	4	4
3 K31786	HELICOPTER UTILITY + UH–1D	1	1	4	5
	CLASS 7B—GROUND SUPPORT				
4 F39172	CRANE WHEEL MTD + 3 TON	0	2	8	8
5 J47068	GEN ST GAS ENG + 5KW 60CY 1–3PH AC 120/240 120/208V SKD-SHK MTD.	2	11	44	46
6 P90610	PUMP CENTRF + GAS DRVN BASE MTD 1-1/2 IN 100 GPM	0	3	12	12
7 X52818	TRUCK LIFT FORK + ROUGH TERRAIN 3000 LB	0	2	8	8
	CLASS 7G—ELECTRONICS				
8 Q42092	RADIO SET + AN/URC–10	1	2	8	9
9 Q50421	RADIO SET AN/VRC–24	0	1	4	4
10 Q53001	RADIO SET AN/VRC–46	4	6	24	28
11 Q54154	RADIO SET AN/VRC–47	1	2	8	9
12 U81707	SWITCHBOARD TELEPHONE MANUAL + SB–22/PT	2	2	8	10
13 V31211	TELEPHONE SET + TA–312/PT	14	21	84	98
	CLASS 7K—TACTICAL VEHICLES				
14 G34815	DOLLY SET LIFT TRANSPORTABLE SHELTER + 5-1/4 TON W/E.	1	1	4	5
15 W95400	TRAILER CARGO + 1/4-TON 2 WHEEL W/E	6	11	44	50
16 W95537	TRAILER CARGO + 3/4 TON 2 WHEEL W/E	6	11	44	50
17 X39735	TRUCK CARGO + 3/4 TON 4×4 W/E	6	9	36	42
18 X39872	TRUCK CARGO + 3/4 TON 4×4 W/WINCH W/E	0	2	8	8
19 X55627	TRUCK PLATFORM UTILITY + 1/2 TON 4×4 W/E	0	7	28	28
20 X57408	TRUCK TANK + FUEL SERVICING 2-1/2 TON 6×6 W/ WINCH W/E.	0	1	4	4
21 X60833	TRUCK UTILITY + 1/4 TON 4×4 W/E	6	11	44	50
	CLASS 7M—WEAPONS				
22 A90117	ARMAMENT SUBSYSTEM HELICOPTER 7.62 MILLIMETER MACHINE GUN + LIGHT.	1	1	4	5
23 A90154	ARMAMENT SUBSYSTEM HELICOPTER 7.62MM MACHINE GUN + HIGH RATE.	0	1	4	4
24 L44575	LAUNCHER GRENADE + 40 MILLIMETER	8	22	88	96
25 L45260	LAUNCHER ROCKET + 3.5 INCH	2	2	8	10
26 L92386	MACHINE GUN 7.62 MILLIMETER + LIGHT FLEXIBLE	2	4	16	18
27 M75714	MOUNT TRIPOD MACHINE GUN + 7.62 MILLIMETER	2	4	16	18
28 N96741	PISTOL CALIBER .45 AUTOMATIC +	8	24	96	104
29 P91244	REVOLVER CALIBER .38 + 4 INCH BARREL	8	16	64	72
30 R94977	RIFLE 5.56 MILLIMETER + W/E	86	291	1,164	1,250
	CLASS 7Q—GENERAL EQUIPMENT				
31 H48568	FILTER METER MODULE + WITH FLOW DIVIDERS AND HOSE ASSEMBLIES.	0	3	12	12

Section IV. SEPARATE BRIGADES

1-12. General

a. This section presents data on the organization and equipment of the separate brigades for use in the force development planning frequently associated with stability operations. Organization charts and tables of selected items of equipment are included for the separate armored, infantry, infantry (mechanized), airborne, and light infantry brigades and their subordinate elements. Each type of brigade has a brigade base and a variable number of maneuver battalions. The figures in paragraphs 1-13 through 1-17 show the organizational structure and personnel strengths for the brigade base of each type of brigade. The strength also is shown for each type of maneuver battalion used in various combinations and numbers with the brigade base. Tables 1-55 through 1-59 are summaries of the five types of brigades' weapons and missiles, aircraft, ground support materiel, electronics, vehicles, and general equipment by class of supply.

b. Additional organizational information on the separate brigades, to include missions, capabilities, and limitations, is in FM 101-10-2, chapter 28.

1-13. Separate Armored Brigade

Figure 1-78 shows the organizational structure and personnel strengths for the separate armored brigade (TOE 17-100G). Table 1-55 provides a summary of equipment for the brigade.

Table 1-53. Summary of Equipment—Cavalry Squadron, Airmobile Division

1	2	3	4	5	6	7
LIN	Nomenclature	HHT (17-96T)	3 air cav trp (17-98T)		Cav trp (17-99T)	Sqdn total (17-95T)
			(1)	(3)		
	CLASS 2A—AIR					
1 X23227	TRANSPORTER AIRMOBILE+ HYD LIFT—FOR SHELTER AND X-4 CONTAINER.	1	1	3	0	4
	CLASS 7A—AIR					
2 K30645	HELICOPTER OBSERVATION+ OH-6A	0	10	30	0	30
3 K31749	HELICOPTER UTILITY+ UH-1B	5	11	33	0	38
4 K31786	HELICOPTER UTILITY+ UH-1D	2	6	18	0	20
	CLASS 7B—GROUND SUPPORT					
5 E70817	COMP RCP PWR DRVN+ AIR WHL GAS DRVN 4 CFM 3000 PSI.	0	1	3	0	3
6 J43918	GEN ST GAS ENG+ 1.5KW 60CY 1PH 2 WIRE AC 120V SHOCK.	3	1	3	1	7
7 J44055	GEN ST GAS ENG+ 1.5KW DC 28V SHOCK	9	1	3	0	12
8 J46178	GEN ST GAS ENG+ 3KW DC 28V WHL MTD	2	0	0	0	2
9 J49055	GEN ST GAS ENG+ 7.5KW DC 28.5V WHL MTD	0	1	3	0	3
	CLASS 7G—ELECTRONICS					
10 Q32756	RADIO SET AN/GRC-106	1	1	3	1	5
11 Q33474	RADIO SET AN/GRC-125	0	1	3	15	18
12 Q42092	RADIO SET+ AN/URC-10	6	27	81	0	87
13 Q50421	RADIO SET AN/VRC-24	1	1	3	0	4
14 Q53001	RADIO SET AN/VRC-46	4	3	9	13	26
15 Q54154	RADIO SET AN/VRC-47	4	1	3	2	9
16 Q55114	RADIO SET AN/VRC-49	7	2	6	5	18
17 U81707	SWITCHBOARD TELEPHONE MANUAL+ SB-22/PT.	2	1	3	1	6
18 V30252	TELEPHONE SET+ TA-1/PT	0	7	21	3	24
19 V31211	TELEPHONE SET+ TA-312/PT	13	4	12	4	29

Table 1-53. Summary of Equipment—Cavalry Squadron, Airmobile Division—Continued

1	2	3	4	5	6	7
LIN	Nomenclature	HHT (17-96T)	3 air cav trp (17-98T)		Cav trp (17-99T)	Sqdn total (17-95T)
			(1)	(3)		
	CLASS 7K—TACTICAL VEHICLES					
20 G34815	DOLLY SET LIFT TRANSPORTABLE SHELTER + 5-1/4 TON W/E.	1	0	0	0	1
21 W95400	TRAILER CARGO + 1/4 TON 2 WHEEL W/E	17	4	12	0	29
22 W95537	TRAILER CARGO + 3/4 TON 2 WHEEL W/E	12	4	12	9	33
23 W95811	TRAILER CARGO + 1-1/2 TON 2 WHEEL W/E	6	0	0	0	6
24 W98825	TRAILER TANK + WATER 400 GALLON 1-1/2 TON 2 WHEEL W/E.	5	0	0	0	5
25 X38639	TRUCK AMBULANCE + 1/4 TON 4×4 W/E	2	0	0	0	2
26 X39735	TRUCK CARGO + 3/4 TON 4×4 W/E	0	0	0	3	3
27 X39872	TRUCK CARGO + 3/4 TON 4×4 W/WINCH W/E	12	4	12	9	33
28 X40146	TRUCK CARGO + 2-1/2 TON 6×6 W/WINCH W/E	11	0	0	0	11
29 X55627	TRUCK PLATFORM UTILITY + 1/2 TON 4×4 W/E.	4	2	6	0	10
30 X57408	TRUCK TANK + FUEL SERVICING 2-/12 TON 6×6 W/WINCH W/E.	4	0	0	0	4
31 X60833	TRUCK UTILITY + 1/4 TON 4×4 W/E	17	4	12	18	47
32 X61244	TRUCK UTILITY + 1/4 TON 4×4 CARRIER FOR 106 MM RIFLE W/E.	0	0	0	6	6
33 X63162	TRUCK WRECKER + 2-1/2 TON 6×6 W/WINCH W/E.	1	0	0	0	1
	CLASS 7M—WEAPONS					
34 A90117	ARMAMENT SUBSYSTEM HELICOPTER 7.62 MILLIMETER MACHINE GUN + LIGHT.	2	16	48	0	50
35 A90426	ARMAMENT SUBSYS HEL 7.62MM MG 2.75 IN RKT LAUNCHER + HIGH RATE.	5	11	33	0	38
36 G02341	DETECTING SET MINE + PTBL METALLIC	1	0	0	3	4
37 L44575	LAUNCHER GRENADE + 40 MILLIMETER	44	43	129	42	215
38 L92386	MACHINE GUN 7.62 MILLIMETER + LIGHT FLEXIBLE.	10	4	12	15	37
39 M68008	MORTAR 81 MILLIMETER + ON MOUNT		0	0	3	3
40 M75714	MOUNT TRIPOD MACHINE GUN + 7.62 MILLIMETER.	0	4	12	15	2
41 N96741	PISTOL CALIBER .45 AUTOMATIC +	92	54	162	53	307
42 R91244	REVOLVER CALIBER .38 + 4 INCH BARREL	25	56	168	0	193
43 R94977	RIFLE 5.56 MILLIMETER + W/E	65	42	126	79	270
44 R96758	RIFLE RECOILLESS 106 MILLIMETER + ON MOUNT.	0	0	0	6	6

Table 1-54. Summary of Equipment—Infantry Battalion, Airmobile Division

1	2	3	4	5	6	7
LIN	Nomenclature	HHC (7-56T)	3 rifle co (7-57T)		Cbt spt co (7-58T)	Bn total (7-55T)
			(1)	(3)		
	CLASS 7B—GROUND SUPPORT					
1 J45699	GEN ST GAS ENG + 3KW 60CY 1-3PH 120/240V 120/208V SKID SHOCK.	1	0	0	0	1
	CLASS 7G—ELECTRONICS					
2 Q32756	RADIO SET AN/GRC-106	1	0	0	0	1
3 Q33474	RADIO SET AN/GRC-125	0	0	0	36	9
4 Q35454	RADIO SET + AN/PRC-6	0	20	60	0	60
5 Q50421	RADIO SET AN/VRC-24	1	0	0	0	1
6 Q53001	RADIO SET AN/VRC-46	1	0	0	0	1
7 Q55114	RADIO SET AN/VRC-49	1	0	0	0	1
8 U81707	SWITCHBOARD TELEPHONE MANUAL + SB-22/PT.	2	0	0	4	3
9 U82529	SWITCHBOARD TELEPHONE MANUAL + SB-993/GT.	0	2	6	0	6
10 V30252	TELEPHONE SET + TA-1/PT	0	15	45	0	45
11 V31211	TELEPHONE SET + TA-312/PT	24	7	21	36	54
	CLASS 7K—TACTICAL VEHICLES					
12 W95400	TRAILER CARGO + 1/4 TON 2 WHEEL W/E	4	0	0	20	9
13 W95537	TRAILER CARGO + 3/4-TON 2 WHEEL W/E	2	0	0	0	2
14 X39872	TRUCK CARGO + 3/4 TON 4×4 W/WINCH W/E	2	0	0	0	2
15 X55627	TRUCK PLATFORM UTILITY + 1/2 TON 4×4 W/E	8	2	6	20	19
16 X60833	TRUCK UTILITY + 1/4 TON 4×4 W/E	4	0	0	4	5
17 X61244	TRUCK UTILITY + 1/4 TON 4×4 CARRIER FOR 106 MM RIFLE W/E.	0	0	0	32	8
	CLASS 7M—WEAPONS					
18 G02341	DETECTING SET MINE + PTBL METALLIC	0	1	3	0	3
19 L44575	LAUNCHER GRENADE + 40 MILLIMETER	8	24	72	24	86
20 L92386	MACHINE GUN 7.62 MILLIMETER + LIGHT FLEXIBLE.	2	6	18	0	20
21 M68008	MORTAR 81 MILLIMETER + ON MOUNT	0	3	9	16	13
22 M75714	MOUNT TRIPOD MACHINE GUN + 7.62 MILLIMETER.	2	6	18	0	20
23 N96741	PISTOL CALIBER .45 AUTOMATIC +	39	55	165	124	235
24 R94977	RIFLE 5.56 MILLIMETER + W/E	95	115	345	368	532
25 R96484	RIFLE RECOILLESS 90 MILLIMETER +	0	6	18	0	18
26 R96758	RIFLE RECOILLESS 106 MILLIMETER + ON MOUNT.	0	0	0	32	8
	CLASS 7N—SPECIAL WEAPONS					
27 H68063	FLAME THROWER PORTABLE +	0	3	9	0	9

1-14. Separate Infantry Brigade

Figure 1-79 shows the organizational structure and personnel strengths for the separate infantry brigade (TOE 7-100G). Table 1-56 provides a summary of equipment for the brigade.

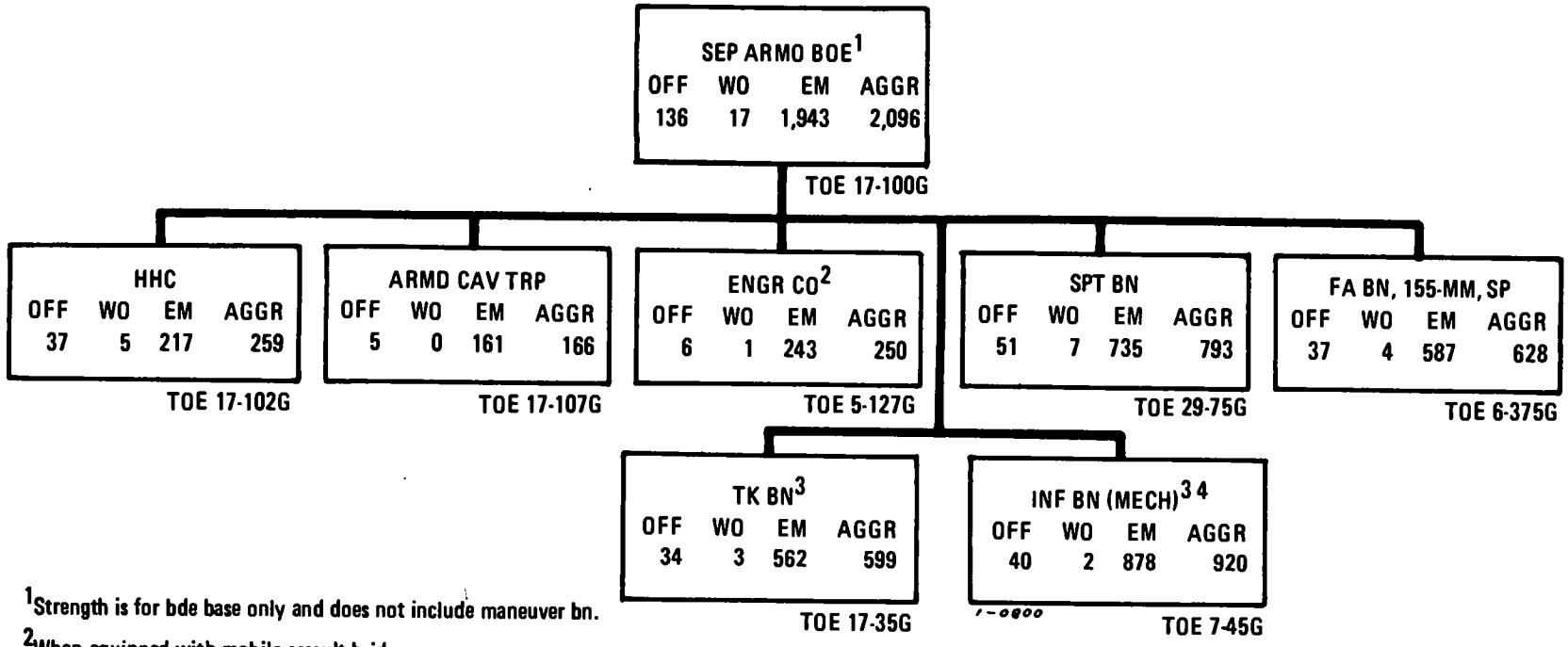

[1]Strength is for bde base only and does not include maneuver bn.

[2]When equipped with mobile assault bridge.

[3]Numbers and types of maneuver bn may vary.

[4]When equipped with rifle, recoilless, 106-mm.

Figure 1-78. Separate armored brigade.

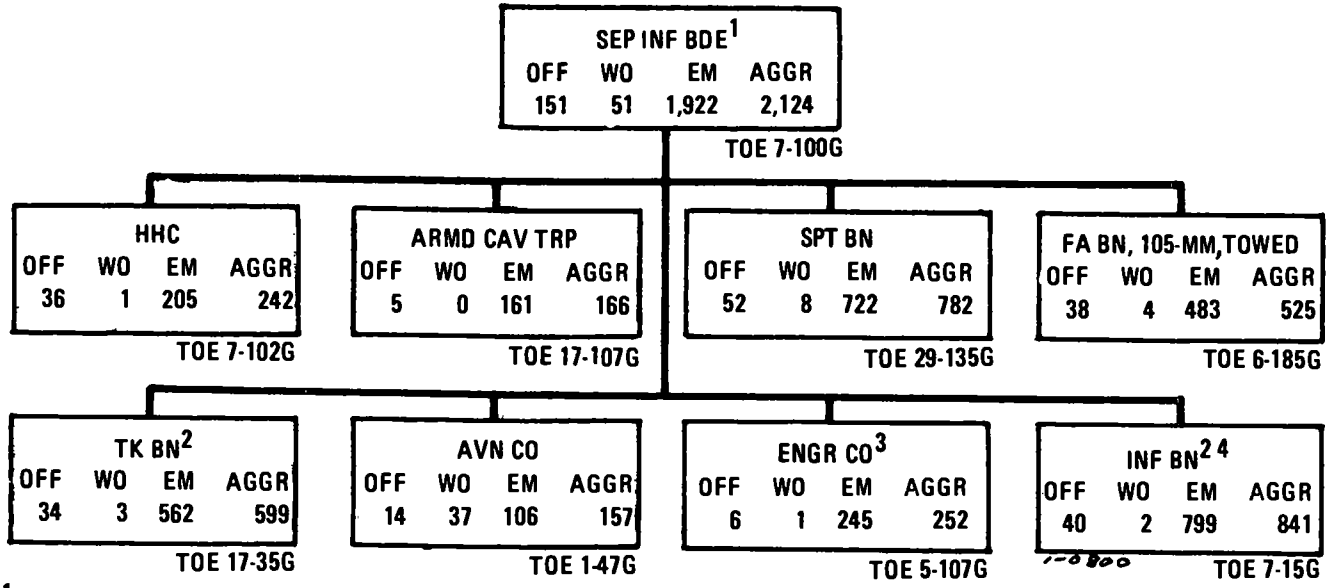

[1]Strength is for bde base only and does not include maneuver bn.

[2]Numbers and types of maneuver bn may vary.

[3]When equipped with mobile assault bridge.

[4]When equipped with rifle, recoilless, 106-mm.

Figure 1–79. Separate infantry brigade.

Table 1-55. Summary of Equipment—Separate Armored Brigade

1	2	3	4	5	6	7	8	9
LIN	Nomenclature	HHC (17-102G)	Armd cav trp (17-107G)	Engr co (5-127G)	Spt bn (29-75G)	FA bn 155-mm SP (6-375G)	Inf bn (mech) (7-45G)	Tk bn (17-35G)
	CLASS 7A—AIR							
1 K30645	HELICOPTER OBSERVATION+ CH-6A.....	4	0	0	0	0	0	0
	CLASS 7B—GROUND SUPPORT							
2 C20414	BRIDGE ARMOR VEH LAUNCH SCISSOR TY+ CL 60 ALUM 60 FT LG OF SPAN.	0	0	3	0	0	0	2
3 C22469	BRIDGE FERRY UNIT END BAY AMPHIBIOUS+ MOBILE FLOAT ASSAULT.	0	0	4	0	0	0	0
4 C22606	BRIDGE FERRY UNIT INTERIOR BAY AMPHIBIOUS+ MOBILE FLOAT ASSAULT.	0	0	8	0	0	0	0
5 C25620	BRIDGE FLOATING+ MOB ASSLT AMPHB 36FT 1 IN LG 10FT W 10FT 4 IN H.	0	0	8	0	0	0	0
6 C25757	BRIDGE FLOATING+ RAFT SECT LIGHT TACTICAL.	0	0	1	0	0	0	0
7 C29490	BUCKET CLAMSHELL+ 3/4 CU YD.....	0	0	1	0	0	0	0
8 C30997	BUCKET DRAGLINE+ 3/4 CU YD.....	0	0	1	0	0	0	0
9 E69242	COMP RCP PWR DRVN+ AIR REC GAS DRVN 15 CFM 175 PSI.	0	0	0	0	0	1	1
10 E70064	COMP RCP PWR DRVN+ TRK 2 WHL PNEU TIRES GAS DRVN 5 CFM 175 PSI.	0	1	0	0	1	0	0
11 E73626	COMP RTY PWR DRVN+ AIR WHBRW FR 2 PNU TIRE GAS DRV 60 CFM 6.5 PSI.	0	0	1	0	0	0	0
12 F39241	CRANE WHEEL MTD+ 5 TON 3/8 CU YD DSL 4×4 ROUGH TERRN AIR TRNSPT.	0	0	0	1	0	0	0
13 F39378	CRANE WHEEL MTD+ 20 TON 3/4 CU YD ROUGH TERRAIN.	0	0	1	0	0	0	0
14 H32869	FAIRLEAD ROLLER AND SHEAVE+ 12-1/2T CR-SHVL CRLR 20T CR-SHVL TRK.	0	0	1	0	0	0	0
15 H38787	FERRY CONVERSION SET RAFT+ INF SPT.	0	0	1	0	0	0	0
16 J41178	GENERATOR SET GASOLINE ENGINE TRAILER MTD+ PU 290/MR.	0	0	0	2	0	0	0
17 J42685	GEN ST GAS ENG+ 0.3KW AC 115V 1PH 400CY DC 24 TO 35V.	0	2	0	0	0	4	4
18 J42822	GEN ST GAS ENG+ 0.4KW AC 1PH 400CY 115V 0.08KW DC 28V SHK PU422U.	0	0	0	0	0	2	2
19 J42959	GEN ST GAS ENG+ 0.5KW 60CY 1PH AC 120V SHK.	0	0	0	0	1	0	0
20 J43096	GEN ST GAS ENG+ 0.5KW 400CY 1 AND 3PH AC 120 120/240 120/208V.	0	0	0	0	6	0	0
21 J43233	GEN ST GAS ENG+ 0.5KW 2 WIRE DC 28V SHK.	0	0	0	9	9	0	0
22 J43918	GEN ST GAS ENG+ 1.5KW 60CY 1PH 2 WIRE AC 120V SHOCK.	1	0	1	14	1	3	1
23 J44055	GEN ST GAS ENG+ 1.5KW DC 28V SHOCK..	0	0	1	0	1	1	4
24 J45699	GEN ST GAS ENG+ 3KW 60CY 1-3PH 120/240V 120/208V SKID SHOCK.	2	0	3	5	0	1	0
25 J47068	GEN ST GAS ENG+ 5KW 60CY 1-3PH AC 120 DS 240 120/208V SKD-SHK MTD.	0	0	0	6	0	1	1
26 J74852	GRADER ROAD MOTORIZED+ DSL DRVN HVY 6×4 FRONT WHL STEER.	0	0	1	0	0	0	0
27 L01326	ION EXCHANGE UNIT WATER PURIFICATION TRUCK MTD+ 3000GPH MAX FLOW.	0	0	1	0	0	0	0
28 L43664	LAUNCH M60 SERIES TANK CHASS TRNSPTG+ 40 AND 60 FT BRDGE TY CL60.	0	0	2	0	0	0	2

Table 1-55. Summary of Equipment—Separate Armored Brigade—Continued

1	2	3	4	5	6	7	8	9
LIN	Nomenclature	HHC (17-102G)	Armd cav trp (17-107G)	Engr co (5-127G)	Spt bn (29-75G)	FA bn, 155-mm SP (6-375G)	Inf bn (mech) (7-45G)	Tk bn (17-35G)
P11866	PNEUMATIC TOOL AND COMPRESSOR OUTFIT+ 250 CFM TRLR MTD.	0	0	1	0	0	0	0
P96640	PUMPING ASSEMBLY FLAMMABLE LIQUID BULK TRANSFER+.	1	0	2	2	0	0	0
R11462	RAMP LOAD VEH+ MBL ASSLT AMPHB FLT BRDGE 39FT 4IN×10FT×11FT.	0	0	4	0	0	0	0
V09730	TAGLINE CRANE AND CRANE-SHOVEL+ 3/4 TO 1 CU YD BUCKET.	0	0	1	0	0	0	0
W76816	TRACTOR FULL TRCKD LOW SPD+ DSL MED DBP W/BULDOZ W/SCARIF WINCH.	0	0	2	0	0	0	0
X48914	TRUCK LIFT FORK+ DSL DRVN 6000 LB CAP ROUGH TERRAIN.	0	0	0	2	0	0	0
Y35486	WATER PURIF EQUIP SET+ TRK MTD DIATOMITE FILTER 1500 GPH (ARMY).	0	0	2	0	0	0	0
	CLASS 7G—ELECTRONICS							
Q15414	RADAR SET+ AN/MPQ-4 LESS POWER	0	0	0	0	1	0	0
Q17332	RADAR SET+ AN/TPS-25 LESS POWER	0	0	0	0	1	0	0
Q32756	RADIO SET AN/GRC-106	3	1	0	0	1	2	2
Q33474	RADIO SET AN/GRC-125	1	11	30	0	17	26	16
Q35454	RADIO SET+ AN/PRC-6	4	0	0	0	0	54	0
Q42092	RADIO SET+ AN/URC-10	4	0	0	0	0	0	0
Q45779	RADIO SET AN/VRC-12	3	7	0	0	0	3	27
Q50421	RADIO SET AN/VRC-24	3	0	0	0	0	2	3
Q53001	RADIO SET AN/VRC-46	25	8	9	16	25	22	24
Q54154	RADIO SET AN/VRC-47	10	3	4	8	10	35	22
Q55114	RADIO SET AN/VRC-49	2	0	0	4	1	1	1
Q55510	RADIO SET AN/VRC-53	0	10	1	0	0	34	38
Q90100	RADIO TELETYPEWRITER SET AN/GRC-122.	0	0	0	0	3	0	0
U81707	SWITCHBOARD TELEPHONE MANUAL+ SB-22/PT.	2	1	1	8	16	6	1
U82529	SWITCHBOARD TELEPHONE MANUAL+ SB-993/GT.	0	0	3	0	3	7	4
V30252	TELEPHONE SET+ TA-1/PT	0	8	3	0	0	84	22
V30937	TELEPHONE SET+ TA-264/PT	0	0	0	0	3	0	5
V31211	TELEPHONE SET+ TA-312/PT	22	7	11	66	157	58	27
	CLASS 7K—TACTICAL VEHICLES							
D11401	CARRIER COMMAND AND RECONNAISSANCE+ ARMORED.	3	16	0	0	0	14	9
D11538	CARRIER COMMAND POST+ LIGHT TRACKED.	5	0	0	0	10	7	7
D12086	CARRIER PERSONNEL FULL TRACKED+ ARMORED.	0	7	10	0	0	49	13
E02670	CHASSIS TRAILER+ GENERAL PURPOSE 3-1/2 TON 2 WHEEL W/E.	0	0	0	1	0	0	0
K90188	INSTRUMENT REPAIR SHOP TRUCK MOUNTED+ 2-1/2 TON 6×6 W/E.	0	0	0	2	0	0	0
S70517	SEMITRAILER LOW BED+ 25 TON 4 WHEEL W/E.	0	0	3	0	0	0	0
S72024	SEMITRAILER STAKE+ 12 TON 4 WHEEL W/E.	0	0	0	14	0	0	0
S72983	SEMITRAILER TANK+ FUEL SERVICING 5000 GALLON 12 TON 4 WHEEL W/E.	0	0	0	9	0	0	0
S73394	SEMITRAILER TANK TRANSPORTER+ 50 TON 8 WHEEL W/E.	0	0	0	2	0	0	0

Table 1–55. Summary of Equipment—Separate Armored Brigade—Continued

1	2	3	4	5	6	7	8	9
LIN	Nomenclature	HHC (17–102G)	Armd cav trp (17–107G)	Engr co (5–127G)	Spt bn (29–75G)	FA bn 155-mm SP (6–375G)	Inf bn (mecb) (7–45G)	Tk bn (17–35G)
63 W94030	TRAILER AMMUNITION+ 1-1/2 TON 2 WHEEL W/E.	0	0	9	0	29	4	0
64 W94441	TRAILER BASIC UTILITY+ 2-1/2 TON 2 SINGLE WHEELS W/E.	0	0	1	0	0	0	0
65 W95400	TRAILER CARGO+ 1/4 TON 2 WHEEL W/E.	46	1	10	33	21	31	15
66 W95537	TRAILER CARGO+ 3/4 TON 2 WHEEL W/E.	13	1	3	27	16	12	4
67 W95811	TRAILER CARGO+ 1-1/2 TON 2 WHEEL W/E.	7	1	4	58	14	14	21
68 W98825	TRAILER TANK+ WATER 400 GALLON 1-1/2 TON 2 WHEEL W/E.	1	0	1	5	6	4	4
69 X38639	TRUCK AMBULANCE+ 1/4 TON 4×4 W/E.	2	0	0	0	0	3	3
70 X38776	TRUCK AMBULANCE+ 3/4 TON 4×4 WE..	2	0	0	18	1	0	0
71 X39735	TRUCK CARGO+ 3/4 TON 4×4 W/E.....	15	0	2	29	19	10	2
72 X39872	TRUCK CARGO+ 3/4 TON 4×4 W/WINCH W/E.	1	1	0	1	12	5	6
73 X40009	TRUCK CARGO+ 2-1/2 TON 6×6 W/E.....	3	0	0	56	15	5	6
74 X40146	TRUCK CARGO+ 2-1/2 TON 6×6 W/WINCH W/E.	3	1	8	9	11	4	14
75 X40831	TRUCK CARGO+ 5 TON 6×6 LWB W/E....	0	0	0	0	16	6	13
76 X40968	TRUCK CARGO+ 5 TON 6×6 LWB W/ WINCH W/E.	0	0	0	0	15	8	7
77 X43845	TRUCK DUMP+ 5 TON 6×6 W/WINCH W/E.	0	0	4	0	0	0	0
78 X56586	TRUCK STAKE+ 5 TON 6×6 W/WINCH W/E.	0	0	1	0	0	0	0
79 X57271	TRUCK TANK+ FUEL SERVICING 2-1/2 TON 6×6 W/E.	1	0	0	2	0	0	1
80 X59189	TRUCK TRACTOR+ 2-1/2 TON 6×6 W/ WINCH W/E.	0	0	0	1	0	0	0
81 X59326	TRUCK TRACTOR+ 5 TON 6×6 W/E.....	0	0	0	27	0	0	0
82 X59600	TRUCK TRACTOR+ 10 TON 6×6 W/DUAL MIDSHIP WN W/HI MTD 5TH WHL W/E.	0	0	0	2	0	0	0
83 X59874	TRUCK TRACTOR+ 10 TON 6×6 W/MID-SHIP WINCH W/LOW MTD 5TH WHL W/E.	0	0	3	0	0	0	0
84 X60833	TRUCK UTILITY+ 1/4 TON 4×4 W/E.....	47	3	10	34	33	31	34
85 X61244	TRUCK UTILITY+ 1/4 TON 4×4 CARRIER FOR 106MM RIFLE W/E.	0	0	0	0	0	6	0
86 X62340	TRUCK VAN+ SHOP 2-1/2 TON 6×6 W/E..	2	0	0	10	2	2	0
87 X63299	TRUCK WRECKER+ 5 TON 6×6 W/WINCH W/E.	1	0	1	3	1	1	2
	CLASS 7M—WEAPONS							
88 E56577	COMBAT ENGINEER VEHICLE FULL TRACKED+.	0	0	2	0	0	0	0
89 G02204	DETECTING SET MINE+ PTBL METALLIC AND NONMETALLIC.	0	0	0	0	1	0	0
90 G02341	DETECTING SET MINE+ PTBL METAL-LIC.	0	3	10	1	5	2	4
91 K57666	HOWITZER MEDIUM SELF PROPELLED+ 155MM.	0	0	0	0	18	0	0
92 L44575	LAUNCHER GRENADE+ 40 MILLIMETER.	9	31	25	12	48	94	19
93 L45123	LAUNCHER ROCKET+ MULTIPLE 115MM.	0	0	0	0	3	0	0
94 L91975	MACHINE GUN CALIBER .50+ HB FLEX-IBLE FOR GROUND USE.	4	1	0	0	0	24	22
95 L92386	MACHINE GUN 7.62 MILLIMETER+ LIGHT FLEXIBLE.	2	3	5	24	34	49	4
96 M68008	MORTAR 81 MILLIMETER+ ON MOUNT..	0	0	0	0	0	9	0

Table 1-55. Summary of Equipment—Separate Armored Brigade—Continued

1	2	3	4	5	6	7	8	9
LIN	Nomenclature	HHC (17-102G)	Armd cav trp (17-107G)	Engr co (5-127G)	Spt bn (29-75G)	FA bn 155-mm SP (6-375G)	Inf bn (mech) (7-45G)	Tk bn (17-35G)
97 M68282	MORTAR 4.2 INCH+ ON MOUNT	0	3	0	0	0	4	4
98 M75577	MOUNT TRIPOD MACHINE GUN+ HEAVY CALIBER 50.	4	1	0	0	0	24	22
99 M75714	MOUNT TRIPOD MACHINE GUN+ 7.62 MILLIMETER.	2	3	5	24	34	49	4
100 N96741	PISTOL CALIBER .45 AUTOMATIC+	47	78	39	33	71	256	323
101 R50543	RECOVERY VEHICLE FULL TRACKED+ LIGHT ARMORED.	0	1	0	0	1	5	0
102 R50680	RECOVERY VEHICLE FULL TRACKED+ MEDIUM.	0	0	0	1	0	0	5
103 R91107	REVOLVER CALIBER .38+ 2 INCH BARREL	1	0	0	0	0	0	0
104 R91244	REVOLVER CALIBER .38+ 4 INCH BARREL	5	0	0	0	0	0	0
105 R95114	RIFLE 7.62 MILLIMETER+	201	84	198	830	559	606	276
106 R95251	RIFLE 7.62 MILLIMETER+ AUTOMATIC WITH BIPOD.	0	6	23	19	0	54	0
107 R96484	RIFLE RECOILLESS 90 MILLIMETER+	1	0	0	0	0	18	0
108 R96758	RIFLE RECOILLESS 106 MILLIMETER+ ON MOUNT.	0	0	0	0	0	6	0
109 U56346	SUBMACHINE GUN CALIBER .45+	0	12	0	0	0	10	118
110 V12826	TANK COMBAT FULL TRACKED+ 76MM GUN.	0	9	0	0	0	0	0
111 V13100	TANK COMBAT FULL TRACKED+ 105MM GUN.	0	0	0	0	0	0	54
	CLASS 7N—SPECIAL WEAPONS							
112 H68063	FLAME THROWER PORTABLE+	0	0	0	0	0	9	0
	CLASS 7Q—GENERAL EQUIPMENT							
113 B83856	BOAT LANDING INFLATABLE+ ASSAULT CRAFT NYLON CLOTH 15 MAN.	0	0	9	0	0	0	0
114 B84404	BOAT RECONNAISSANCE+ PNEUMATIC 3 MAN.	0	0	6	0	0	0	0
115 J04716	FUEL SYSTEM SUPPLY POINT+ PORTABLE 6000 GAL CAP.	0	0	0	1	0	0	0
116 L85420	LUBRICAT-SERV UNIT PWR OPER+ TRLR MTD 15CF AIR COMP GAS DRVN WZD.	0	0	0	1	0	0	0
117 T10138	SHOP EQUIP CONTACT MAINT TRK MTD+.	0	0	1	5	0	0	0
118 T10275	SHOP EQUIP ELEC REP SEMITRLR MTD+ ARMY.	0	0	0	1	0	0	0
119 V12141	TANK AND PUMP UNIT LIQUID DISPENSING TRUCKMOUNTING+.	1	0	1	2	2	4	5
120 V19950	TANK UNIT LIQUID DISPENSING TRAILER MOUNTING+.	0	0	1	0	2	4	5

1-15. Separate Infantry Brigade (Mechanized)

Figure 1-80 shows the organizational structure and personnel strengths for the separate infantry brigade (mechanized) (TOE 37-100G). Table 1-57 provides a summary of equipment for the brigade.

1-16. Separate Airborne Brigade

Figure 1-81 shows the organizational structure and personnel strengths for the separate airborne brigade (TOE 57-100G). Table 1-58 provides a summary of equipment for the brigade.

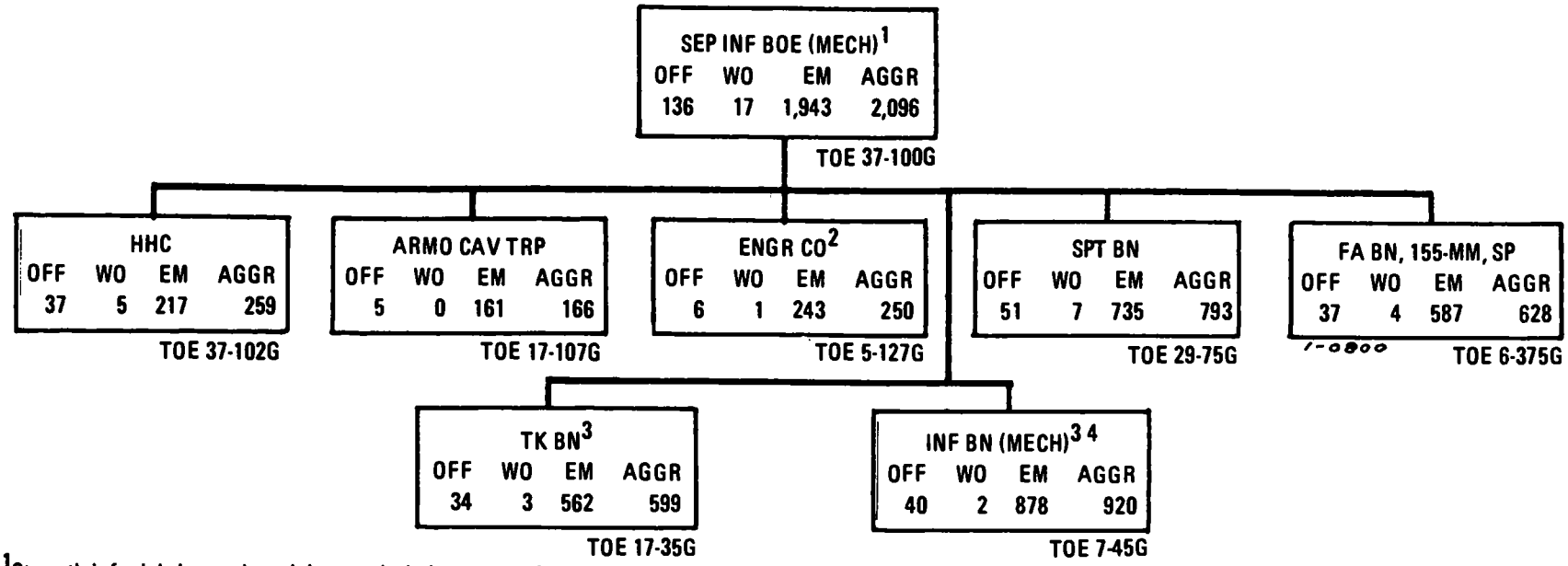

[1]Strength is for bde base only and does not include maneuver bn.

[2]When equipped with mobile assault bridge.

[3]Numbers and types of maneuver bn may vary.

[4]When equipped with rifle, recoilless, 106-mm.

Figure 1–80. Separate infantry brigade (mechanized).

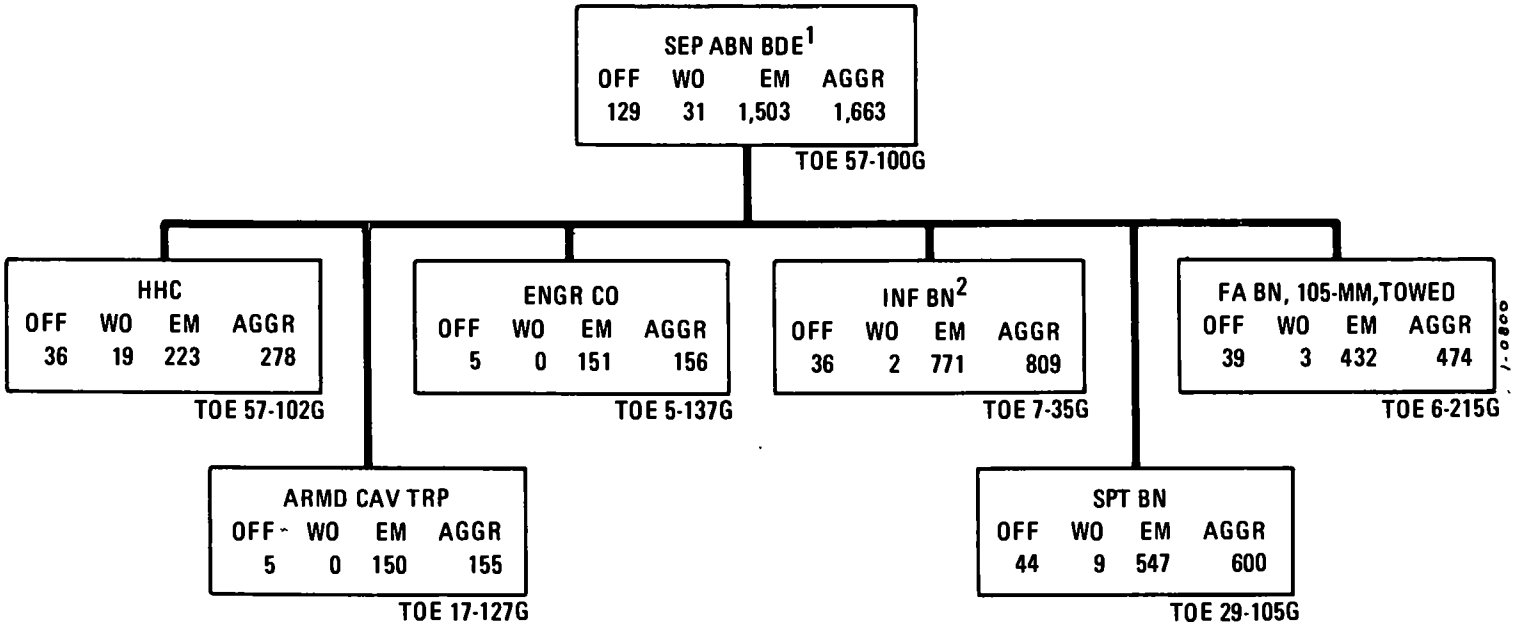

[1]Strength is for bde base only and does not include maneuver bn.

[2]Number of maneuver bn may vary.

Figure 1–81. Separate airborne brigade.

Table 1–56. Summary of Equipment—Separate Infantry Brigade

1	2	3	4	5	6	7	8	9	10
LIN	Nomenclature	HHC (7–102G)	Armd cav trp (17–107G)	Avn co (1–47G)	Engr co (5–107G)	Spt bn (29–135G)	FA bn 105-mm towed (6–185G)	Tk bn (17–35G)	Inf bn (7–15G)
	CLASS 7A—AIR								
1 K30645	HELICOPTER OBSERVATION + OH-6A	0	0	18	0	0	0	0	0
2 K31749	HELICOPTER UTILITY + UH-1B	0	0	4	0	0	0	0	0
3 K31786	HELICOPTER UTILITY + UH-1D	0	0	10	0	0	0	0	0
	CLASS 7B—GROUND SUPPORT								
4 C20414	BRIDGE ARMOR VEH LAUNCH SCISSOR-TY + 60 ALUM 60 FT LG OF SPAN.	0	0	0	3	0	0	2	0
5 C22469	BRIDGE FERRY UNIT END BAY AMPHIBIOUS + MOBILE FLOAT ASSAULT.	0	0	0	4	0	0	0	0
6 C22606	BRIDGE FERRY UNIT INTERIOR BAY AMPHIBIOUS + MOBILE FLOAT ASSAULT.	0	0	0	8	0	0	0	0
7 C25620	BRIDGE FLOATING + MOB ASSLT AMPHB 36FT 1 IN LG 10FT W 10FT 4 IN H.	0	0	0	8	0	0	0	0
8 C25757	BRIDGE FLOATING + RAFT SECT LIGHT TACTICAL	0	0	0	1	0	0	0	0
9 C29490	BUCKET CLAMSHELL + 3/4 CU YD	0	0	0	1	0	0	0	0
10 C30997	BUCKET DRAGLINE + 3/4 CU YD	0	0	0	1	0	0	0	0
11 E69242	COMP RCP PWR DRVN + AIR REC GAS DRVN 15 CFM 175 PSI.	0	0	0	0	0	0	1	0
12 E70064	COMP RCP PWR DRVN + TRK 2 WHL PNEU TIRES GAS DRVN 5 CFM 175 PSI.	0	1	1	0	0	0	0	0
13 E73626	COMP RTY PWR DRVN + AIR WHBRW FR-2 PNU TIRE GAS DRV 60 CFM 6.5 PSI.	0	0	0	1	0	0	0	0
14 F39241	CRANE WHEEL MTD + 5 TON 3/8 CU YD DSL 4×4 ROUGH TERRN AIR TRNSPT.	0	0	0	0	1	0	0	0
15 F39378	CRANE WHEEL MTD + 20 TON 3/4 CU YD ROUGH TERRAIN.	0	0	0	1	0	0	0	0
16 H38787	FERRY CONVERSION SET RAFT + INF SPT	0	0	0	1	0	0	0	0
17 H56391	FIRE FIGHT EQUIP SET + TRK MTD ARMY AIRCRAFT CRASH OS CL 5308.	0	0	1	0	0	0	0	0
18 J41178	GENERATOR SET GASOLINE ENGINE TRAILER MTD + PU 290/MR.	0	0	0	0	3	0	0	0
19 J42685	GEN ST GAS ENG + 0.3 KW AC 115V 1-PH 400CY DC 24 TO 35V.	0	2	0	0	0	0	4	4
20 J42822	GEN ST GAS ENG + 0.4KW AC 1PH 400CY 115V 0.08KW DC 28V SHK PU422U.	0	0	0	0	0	0	2	2
21 J42959	GEN ST GAS ENG + 0.5KW 60CY 1PH AC 120V SHK	0	0	0	0	1	1	0	0
22 J43233	GEN ST GAS ENG + 0.5KW 2 WIRE DC 28V SHK	0	0	0	0	9	20	0	0

23	J43918	GEN ST GAS ENG + 1.5KW 60CY 1PH 2 WIRE AC 120V SHOCK.	1	0	9	1	15	4	1	8
24	J44055	GEN ST GAS ENG + 1.5KW DC 28V SHOCK	1	0	0	1	0	0	4	3
25	J45699	GEN ST GAS ENG + 3KW 60CY 1-3PH 1-20/240V 120/208V SKID SHOCK.	2	0	3	3	5	1	0	1
26	J47068	GEN ST GAS ENG + 5KW 60CY 1-3PH AC 120/240 120/208V SKD-SHK MTD.	3	0	1	0	6	0	1	1
27	J49055	GEN ST GAS ENG + 7.5 KW DC 28.5 V WHL MTD	0	0	3	0	0	0	0	0
28	J74852	GRADER ROAD MOTORIZED + DSL DRVN-HVY 6X4 FRONT-WHL STEER.	0	0	0	1	0	0	0	0
29	L01326	TON EXCHANGE UNIT WATER PURIFICATION TRUCK MTD + 3000GPH MAX FLOW.	0	0	0	1	0	0	0	0
30	L43664	LAUNCH M60 SERIES TANK CHASS TRNSPTG + 40 AND 60 FT BRDGE TY CL60.	0	0	0	2	0	0	2	0
31	P11866	PNEUMATIC TOOL AND COMPRESSOR OUTFIT + 250 CFM TRLR MTD.	0	0	0	1	0	0	0	0
32	P96640	PUMPING ASSEMBLY FLAMMABLE LIQUID BULK TRANSFER +.	0	0	2	2	2	0	0	0
33	R11462	RAMP LOAD VEH + MBL ASSLT AMPHB FLT BRIDGE 39FT 4IN X 10FT X 11FT.	0	0	0	4	0	0	0	0
34	V09730	TAGLINE CRANE AND CRANE-SHOVEL + 3/4 TO 1 CU YD BUCKET.	0	0	0	1	0	0	0	0
35	W76816	TRACTOR FULL TRCKD LOW SPD + DSL-MED DBP W/ BULDOZ W/SCARIF WINCH.	0	0	0	2	0	0	0	0
36	X48914	TRUCK LIFT FORK + DSL DRVN 6000 LB CAP ROUGH TERRAIN.	0	0	0	0	2	0	0	0
37	Y35486	WATER PURIF EQUIP SET + TRK MTD DIATOMITE FILTER 1500 GPH (ARMY).	0	0	0	2	0	0	0	0
		CLASS 7G—ELECTRONICS								
38	Q15414	RADAR SET + AN/MPQ-4 LESS POWER	0	0	0	0	0	1	0	0
39	Q17332	RADAR SET + AN/TPS-25 LESS POWER	0	0	0	0	0	1	0	0
40	Q32756	RADIO SET AN/GRC-106	1	1	0	0	0	1	2	2
41	Q33474	RADIO SET AN/GRC-125	1	11	1	30	0	20	16	6
42	Q35454	RADIO SET + AN/PRC-6	4	0	0	0	0	4	0	0
43	Q42092	RADIO SET + AN/URC-10	0	0	32	0	0	0	0	0
44	Q45779	RADIO SET AN/VRC-12	0	7	0	0	0	0	27	0
45	Q50421	RADIO SET AN/VRC-24	2	0	1	0	0	0	3	2
46	Q53001	RADIO SET AN/VRC-46	28	8	2	9	17	40	24	14
47	Q54154	RADIO SET AN/VRC-47	6	3	2	4	8	4	22	19
48	Q55114	RADIO SET AN/VRC-49	2	0	1	0	4	5	1	1
49	Q55510	RADIO SET AN/VRC-53	0	10	0	0	0	0	38	3
50	U81707	SWITCHBOARD TELEPHONE MANUAL + SB-22/PT	2	1	1	1	8	15	1	3
51	U82255	SWITCHBOARD TELEPHONE MANUAL + SB-86/P	0	0	0	0	0	0	0	1
52	U82529	SWITCHBOARD TELEPHONE MANUAL + SB-993/GT	0	0	0	3	0	4	4	2
53	V30252	TELEPHONE SET + TA-1/PT	0	6	0	3	0	0	22	0
54	V30937	TELEPHONE SET + TA-264/PT	0	0	0	0	0	3	5	0
55	V31211	TELEPHONE SET + TA-312/PT	25	7	10	11	68	145	27	55

Table 1-56. Summary of Equipment—Separate Infantry Brigade—Continued

1	2	3	4	5	6	7	8	9	10
LIN	Nomenclature	HHC (7-102G)	Armd cav trp (17-107G)	Avn co (1-47G)	Engr co (5-107G)	Spt bn (29-135G)	FA bn 105-mm towed (6-135G)	Tk bn (17-35G)	Inf bn (7-15G)
	CLASS 7K—TACTICAL VEHICLE								
56 D11401	CARRIER COMMAND AND RECONNAISSANCE + ARMORED.	0	16	0	0	0	0	9	0
57 D11538	CARRIER COMMAND POST + LIGHT TRACKED	0	0	0	0	0	0	7	0
58 D12086	CARRIER PERSONNEL FULL TRACKED + ARMORED	0	7	0	0	0	0	13	0
59 E02670	CHASSIS TRAILER + GENERAL PURPOSE 3-1/2 TON 2 WHEEL W/E.	0	0	0	0	1	0	0	0
60 K90188	INSTRUMENT REPAIR SHOP TRUCK MOUNTED + 2-1/2 TON 6×6 W/E.	0	0	0	0	2	0	0	0
61 S70243	SEMITRAILER LOW BED + WRECKER 12-TON 4 WHEEL 40 FT W/E.	0	0	0	0	1	0	0	0
62 S70517	SEMITRAILER LOW BED + 25 TON 4 WHEEL W/E	0	0	0	3	0	0	0	0
63 S72024	SEMITRAILER STAKE + 12 TON 4 WHEEL W/E	0	0	0	0	15	0	0	0
64 S72983	SEMITRAILER TANK + FUEL SERVICING 5000 GALLON 12 TON 4 WHEEL W/E.	0	0	0	0	9	0	0	0
65 S73394	SEMITRAILER TANK TRANSPORTER + 50 TON 8 WHEEL W/E.	0	0	0	0	1	0	0	0
66 S74079	SEMITRAILER VAN + CARGO 12 TON 4-WHEEL W/E	0	0	0	0	2	0	0	0
67 W94030	TRAILER AMMUNITION + 1-1/2 TON 2-WHEEL W/E	0	0	0	0	0	17	0	0
68 W94441	TRAILER BASIC UTILITY + 2-1/2 TON 2 SINGLE WHEELS W/E.	0	0	0	10	0	0	0	0
69 W95400	TRAILER CARGO + 1/4 TON 2 WHEEL W/E	45	1	4	10	34	25	15	30
70 W95537	TRAILER CARGO + 3/4 TON 2 WHEEL W/E	13	1	4	4	28	24	4	24
71 W95811	TRAILER CARGO + 1-1/2 TON 2 WHEEL W/E	9	1	12	4	60	14	21	18
72 W98825	TRAILER TANK + WATER 400 GALLON 1-1/2 TON 2 WHEEL W/E.	1	0	1	1	5	5	4	4
73 X38639	TRUCK AMBULANCE + 1/4 TON 4×4 W/E	3	0	0	0	0	0	3	6
74 X38776	TRUCK AMBULANCE + 3/4 TON 4×4 WE	2	0	0	0	18	1	0	0
75 X39735	TRUCK CARGO + 3/4 TON 4×4 W/E	18	0	4	3	3	29	22	26
76 X39872	TRUCK CARGO + 3/4 TON 4×4 W/WINCH-W/E	0	1	1	0	2	12	6	2
77 X40009	TRUCK CARGO + 2-1/2 TON 6×6 W/E	3	0	2	0	57	14	6	9
78 X40146	TRUCK CARGO + 2-1/2 TON 6×6 W/WINCH W/E	3	1	6	7	10	45	14	6
79 X40420	TRUCK CARGO + 2-1/2 TON 6×6 XLWB W/WINCH W/E	0	0	0	0	1	0	0	0
80 X40831	TRUCK CARGO + 5 TON 6×6 LWB W/E	0	0	0	0	0	0	13	0
81 X40968	TRUCK CARGO + 5 TON 6×6 LWB W/WINCH W/E	0	0	0	0	0	1	7	2
82 X43845	TRUCK DUMP + 5 TON 6×6 W/WINCH W/E	0	0	0	13	0	0	0	0
83 X56586	TRUCK STAKE + 5 TON 6×6 W/WINCH W/E	0	0	0	1	0	0	0	0
84 X57271	TRUCK TANK + FUEL SERVICING 2-1/2 TON 6×6 W/E	0	0	5	0	2	0	1	0
85 X59189	TRUCK TRACTOR + 2-1/2 TON 6×6 W/WINCH W/E	0	0	0	0	1	0	0	0
86 X59326	TRUCK TRACTOR + 5 TON 6×6 W/E	0	0	0	0	31	0	0	0
87 X59600	TRUCK TRACTOR + 10 TON 6×6 W/DUAL MIDSHIP WN W/HI MTD 5TH WHL W/E.	0	0	0	0	1	0	0	0

88	X59874	TRUCK TRACTOR + 10 TON 6×6 W/MIDSHIP WINCH W/LOW MTD 5TH WHL W/E.	0	0	0	3	0	0	0	0
89	X60696	TRUCK TRACTOR WRECKER + 5 TON 6×6 W/WINCH W/E.	0	0	0	0	1	0	0	0
90	X60833	TRUCK UTILITY + 1/4 TON 4×4 W/E	46	3	4	10	35	37	34	36
91	X61244	TRUCK UTILITY + 1/4 TON 4×4 CARRIER FOR 106 MM RIFLE W/E.	0	0	0	0	0	0	0	2
92	X62340	TRUCK VAN + SHOP 2-1/2 TON 6×6 W/E	6	0	2	0	13	3	0	1
93	X63299	TRUCK WRECKER + 5 TON 6×6 W/WINCH W/E	1	0	0	1	3	1	2	1
		CLASS 7M—WEAPONS								
94	A90117	ARMAMENT SUBSYSTEM HELICOPTER 7.62 MILLIMETER MACHINE GUN + LIGHT.	0	0	10	0	0	0	0	0
95	A90154	ARMAMENT SUBSYSTEM HELICOPTER 7.62MM MACHINE GUN + HIGH RATE.	0	0	9	0	0	0	0	0
96	A90426	ARMAMENT SUBSYS HEL 7.62MM MG 2.75IN RKT LAUNCHER + HIGH RATE.	0	0	4	0	0	0	0	0
97	A90460	ARMAMENT SUBSYSTEM HELICOPTER 40 MILLIMETER GRENADE LAUNCHER +.	0	0	4	0	0	0	0	0
98	E56577	COMBAT ENGINEER VEHICLE FULL TRACKED +	0	0	0	2	0	0	0	0
99	G02341	DETECTING SET MINE + PLBL METALLIC	0	3	0	10	2	4	4	4
100	K57529	HOWITZER TOWED + 105 MILLIMETER	0	0	0	0	0	18	0	0
101	L44575	LAUNCHER GRENADE + 40 MILLIMETER	9	31	0	23	12	21	19	16
102	L45123	LAUNCHER ROCKET + MULTIPLE 115MM	0	0	0	0	0	3	0	0
103	L91975	MACHINE GUN CALIBER .50 + HB FLEXIBLE FOR GROUND USE.	4	1	0	0	0	0	22	13
104	L92386	MACHINE GUN 7.62 MILLIMETER + LIGHT FLEXIBLE	2	3	2	5	24	33	4	7
105	M68282	MORTAR 4.2 INCH + ON MOUNT	0	3	0	0	0	0	4	4
106	M75577	MOUNT TRIPOD MACHINE GUN + HEAVY CALIBER 50	4	1	0	0	0	0	22	13
107	M75714	MOUNT TRIPOD MACHINE GUN + 7.62 MILLIMETER	2	3	2	5	24	33	4	7
108	N96741	PISTOL CALIBER .45 AUTOMATIC +	54	76	0	38	33	47	323	65
109	R50543	RECOVERY VEHICLE FULL TRACKED + LIGHT ARMORED.	0	1	0	0	0	0	0	0
110	R50680	RECOVERY VEHICLE FULL TRACKED + MEDIUM	0	0	0	0	1	0	5	0
111	R91107	REVOLVER CALIBER .38 + 2 INCH BARREL	1	0	0	0	0	0	0	0
112	R91244	REVOLVER CALIBER .38 + 4 INCH BARREL	0	0	66	0	5	0	0	0
113	R95114	RIFLE 7.62 MILLIMETER +	182	84	91	196	832	493	276	239
114	R95251	RIFLE 7.62 MILLIMETER + AUTOMATIC WITH BIPOD	0	6	0	23	19	0	0	2
115	R96484	RIFLE RECOILLESS 90 MILLIMETER	1	0	0	0	0	0	0	0
116	R96758	RIFLE RECOILLESS 106 MILLIMETER + ON MOUNT	0	0	0	0	0	0	0	2
117	U56346	SUBMACHINE GUN CALIBER .45 +	0	12	0	0	0	0	118	0
118	V12826	TANK COMBAT FULL TRACKED + 76MM GUN	0	9	0	0	0	0	0	0
119	V13100	TANK COMBAT FULL TRACKED + 105MM GUN	0	0	0	0	0	0	54	0
		CLASS 7N—SPECIAL WEAPONS								
120	H68063	FLAME THROWER PORTABLE +	0	0	0	0	0	0	0	9

Table 1-56. Summary of Equipment—Separate Infantry Brigade—Continued

1 LIN	2 Nomenclature	3 HHC (7-102G)	4 Armd cav trp (17-107G)	5 Avn co (1-47G)	6 Engr co (5-107G)	7 Spt bn (29-185G)	8 FA bn 105-mm towed (6-185G)	9 Tk bn (17-85G)	10 Inf bn (7-15G)
	CLASS 7Q—GENERAL EQUIPMENT								
121 B83856	BOAT LANDING INFLATABLE+ ASSAULT CRAFT NYLON CLOTH 15 MAN.	0	0	0	9	0	0	0	0
122 B84404	BOAT RECONNAISSANCE+ PNEUMATIC 3-MAN.....	0	0	0	6	0	0	0	0
123 J04716	FUEL SYSTEM SUPPLY POINT+ PORTABLE 6000 GAL CAP.	0	0	0	0	1	0	0	0
124 L85420	LUBRICAT-SERV UNIT PWR OPER+ TRLR MTD 15CF AIR COMP GAS DRVN WZD.	0	0	0	0	1	0	0	0
125 T10138	SHOP EQUIP CONTACT MAINT TRK MTD+.....	0	0	0	1	5	0	0	0
126 T10275	SHOP EQUIP ELEC REP SEMITRLR MTD+ ARMY.....	0	0	0	0	1	0	0	0
127 V12141	TANK AND PUMP UNIT LIQUID DISPENSING TRUCK-MOUNTING+.	1	0	0	1	2	1	5	2
128 V19950	TANK UNIT LIQUID DISPENSING TRAILER MOUNTING+.	0	0	5	1	0	0	5	2

Table 1-57. Summary of Equipment—Separate Infantry Brigade (Mechanized)

1	2	3	4	5	6	7	8	9
LIN	Nomenclature	HHC (37-102G)	Armd cav trp (17-107G)	Engr co (5-127G)	Spt bn (29-75G)	FA bn 155-mm SP (6-375G)	Inf bn (mech) (7-45G)	Tk bn (17-35G)
	CLASS 7A—AIR							
1 K30645	HELICOPTER OBSERVATION+ OH-6A-----	4	0	0	0	0	0	0
	CLASS 7B—GROUND SUPPORT							
2 C20414	BRIDGE ARMOR VEH LAUNCH SCISSOR TY+ CL 60 ALUM 60 FT LG OF SPAN.	0	0	3	0	0	0	2
3 C22469	BRIDGE FERRY UNIT END BAY AMPHIBIOUS+ MOBILE FLOAT ASSAULT.	0	0	4	0	0	0	0
4 C22606	BRIDGE FERRY UNIT INTERIOR BAY AMPHIBIOUS+ MOBILE FLOAT ASSAULT.	0	0	8	0	0	0	0
5 C25620	BRIDGE FLOATING+ MOB ASSLT AMPHB 36FT 1 IN LG 10FT W 10FT 4 IN H.	0	0	8	0	0	0	0
6 C25757	BRIDGE FLOATING+ RAFT SECT LIGHT TACTICAL.	0	0	1	0	0	0	0
7 C29490	BUCKET CLAMSHELL+ 3/4 CUYD-----	0	0	1	0	0	0	0
8 C30997	BUCKET DRAGLINE+ 3/4 CUYD-----	0	0	1	0	0	0	0
9 E69242	COMP RCP PWR DRVN+ AIR REC GAS DRVN 15 CFM 175 PSI.	0	0	0	0	0	1	1
10 E70064	COMP RCP PWR DRVN+ TRK 2 WHL PNEU TIRES GAS DRVN 5 CFM 175 PSI.	0	1	0	0	1	0	0
11 E73626	COMP RTY PWR DRVN+ AIR WHBRW FR-2 PNU TIRE GAS DRV 60 CFM 6.5 PSI.	0	0	1	0	0	0	0
12 F39241	CRANE WHEEL MTD+ 5 TON 3/8 CUYD DSL 4X4 ROUGH TERRN AIR TRNSPT.	0	0	0	1	0	0	0
13 F39378	CRANE WHEEL MTD+ 20 TON 3/4 CUYD ROUGH TERRAIN.	0	0	1	0	0	0	0
14 H32869	FAIRLEAD ROLLER AND SHEAVE+ 12-1/2T CR-SHVL CRLR 20T CR-SHVL TRK.	0	0	1	0	0	0	0
15 H38787	FERRY CONVERSION SET RAFT+ INF SPT.	0	0	1	0	0	0	0
16 J41178	GENERATOR SET GASOLINE ENGINE TRAILER MTD+ PU 290/MR.	0	0	0	2	0	0	0
17 J42685	GEN ST GAS ENG+ 0.3KW AC 115V 1PH 400CY DC 24 TO 35V.	0	2	0	0	0	4	4
18 J42822	GEN ST GAS ENG+ 0.4KW AC 1PH 400CY 115V 0.08KW DC 28V SHK PU422U.	0	0	0	0	0	2	2
19 J42959	GEN ST GAS ENG+ 0.5KW 60CY 1PH AC 120V SHK.	0	0	0	0	1	0	0
20 J43096	GEN ST GAS ENG+ 0.5KW 400CY 1 AND 3PH AC 120 120/240 120/208V.	0	0	0	0	6	0	0
21 J43233	GEN ST GAS ENG+ 0.5KW 2 WIRE DC 28V SHK.	0	0	0	9	9	0	0
22 J43918	GEN ST GAS ENG+ 1.5KW 60CY 1PH 2 WIRE AC 120V SHOCK.	1	0	1	14	1	3	1
23 J44055	GEN ST GAS ENG+ 1.5KW DC 28V SHOCK	1	0	1	0	1	1	4
24 J45699	GEN ST GAS ENG+ 3KW 60CY 1-3PH 120/240V 120/208V SKID SHOCK.	2	0	3	5	0	1	0
25 J47068	GEN ST GAS ENG+ 5KW 60CY 1-3PH AC 120/240 120/208V SKD-SHK MTD.	0	0	0	6	0	1	1
26 J74852	GRADER ROAD MOTORIZED+ DSL DRVN HVY 6X4 FRONT-WHL STEEP.	0	0	1	0	0	0	0
27 L01326	ION EXCHANGE UNIT WATER PURIFICATION TRUCK MTD+ 3000GPH MAX FLOW.	0	0	1	0	0	0	0
28 L43664	LAUNCH M60 SERIES TANK CHASS TRNSPTG+ 40 AND 60 FT BRDGE TY CL60.	0	0	2	0	0	0	2

Table 1-57. Summary of Equipment—Separate Infantry Brigade (Mechanized)—Continued

1	2	3	4	5	6	7	8	9
LIN	Nomenclature	HHC (17-102G)	Armd cav trp (17-107G)	Engr co (5-127G)	Spt bn (29-75G)	FA bn 155-mm SP (6-375G)	Inf bn (mech) (7-45G)	Tk bn (17-35G)
P11866	PNEUMATIC TOOL AND COMPRESSOR OUTFIT+ 250 CFM TRLR MTD.	0	0	1	0	0	0	0
P96640	PUMPING ASSEMBLY FLAMMABLE LIQUID BULK TRANSFER+	1	0	2	2	0	0	0
R11462	RAMP LOAD VEH+ MBL ASSLT AMPHB FLT BRDGE 39FT 4IN×10FT×11FT.	0	0	4	0	0	0	0
V09730	TAGLINE CRANE AND CRANE-SHOVEL+ 3/4 TO 1 CUYD BUCKET.	0	0	1	0	0	0	0
W76816	TRACTOR FULL TRCKD LOW SPD+ DSL MED DBP W/BULDOZ W/SCARIF WINCH.	0	0	2	0	0	0	0
X48914	TRUCK LIFT FORK+ DSL DRVN 6000 LB CAP ROUGH TERRAIN.	0	0	0	2	0	0	0
Y35486	WATER PURIF EQUIP SET+ TRK MTD DIATOMITE FILTER 1500 GPH (ARMY).	0	0	2	0	0	0	0
	CLASS 7G—ELECTRONICS							
Q15414	RADAR SET+ AN/MPQ-4 LESS POWER	0	0	0	0	1	0	0
Q17332	RADAR SET+ AN/TPS-25 LESS POWER	0	0	0	0	1	0	0
Q32756	RADIO SET AN/GRC-106	3	1	0	0	1	2	2
Q33474	RADIO SET AN/GRC-125	1	11	30	0	17	26	16
Q35454	RADIO SET+ AN/PRC-6	4	0	0	0	0	54	0
Q42092	RADIO SET+ AN/URC-10	4	0	0	0	0	0	0
Q45779	RADIO SET AN/VRC-12	3	7	0	0	0	3	27
Q50421	RADIO SET AN/VRC-24	3	0	0	0	0	2	3
Q53001	RADIO SET AN/VRC-46	25	8	9	16	25	22	24
Q54154	RADIO SET AN/VRC-47	10	3	4	8	10	35	22
Q55114	RADIO SET AN/VRC-49	3	0	0	4	1	1	1
Q55510	RADIO SET AN/VRC-53	0	10	1	0	0	34	38
Q90100	RADIO TELETYPEWRITER SET AN/GRC-122.	0	0	0	0	3	0	0
U81707	SWITCHBOARD TELEPHONE MANUAL+ SB-22/PT.	2	1	1	8	16	6	1
U82529	SWITCHBOARD TELEPHONE MANUAL+ SB-993/GT.	0	0	3	0	3	7	4
V30252	TELEPHONE SET+ TA-1/PT	0	6	3	0	0	84	22
V30937	TELEPHONE SET+ TA-264/PT	0	0	0	0	3	0	5
V31211	TELEPHONE SET+ TA-312/PT	23	7	11	66	157	58	27
	CLASS 7K—TACTICAL VEHICLES							
D11401	CARRIER COMMAND AND RECONNAISSANCE+ ARMORED.	3	16	0	0	0	14	9
D11538	CARRIER COMMAND POST+ LIGHT TRACKED.	5	0	0	0	10	7	7
D12086	CARRIER PERSONNEL FULL TRACKED+ ARMORED.	0	7	10	0	0	49	13
E02670	CHASSIS TRAILER+ GENERAL PURPOSE 3-1/2 TON 2 WHEEL W/E.	0	0	0	1	0	0	0
K90188	INSTRUMENT REPAIR SHOP TRUCK MOUNTED+ 2-1/2 TON 6×6 W/E.	0	0	0	2	0	0	0
S70517	SEMITRAILER LOW BED+ 25 TON 4 WHEEL W/E.	0	0	3	0	0	0	0
S72024	SEMITRAILER STAKE+ 12 TON 4 WHEEL W/E.	0	0	0	14	0	0	0
S72983	SEMITRAILER TANK+ FUEL SERVICING 5000 GALLON 12 TON 4 WHEEL W/E.	0	0	0	9	0	0	0
S73394	SEMITRAILER TANK TRANSPORTER+ 50 TON 8 WHEEL W/E.	0	0	0	2	0	0	0

Tabie 1-57. Summary of Equipment—Separate Infantry Brigade (Mechanized)—Continued

1	2	3	4	5	6	7	8	9
LIN	Nomenclature	HHC (37-102G)	Armd cav trp (17-107G)	Engr co (5-127G)	Spt bn (29-75G)	FA bn 155-mm SP (6-375G)	Inf bn (mech) (7-45G)	Tk bn (17-35G)
63 W94030	TRAILER AMMUNITION+ 1-1/2 TON 2 WHEEL W/E.	0	0	9	0	29	4	0
64 W94441	TRAILER BASIC UTILITY+ 2-1/2 TON 2 SINGLE WHEELS W/E.	0	0	1	0	0	0	0
65 W95400	TRAILER CARGO+ 1/4 TON 2 WHEEL W/E.	47	1	10	33	21	31	15
66 W95537	TRAILER CARGO+ 3/4 TON 2-WHEEL W/E.	13	1	3	27	16	12	4
67 W95811	TRAILER CARGO+ 1-1/2 TON 2 WHEEL W/E.	7	1	4	58	14	14	21
67 W95811	TRAILER CARGO+ 1-1/2 TON 2 WHEEL W/E.	7	1	4	58	14	14	21
68 W98825	TRAILER TANK+ WATER 400 GALLON 1-1/2 TON 2 WHEEL W/E.	1	0	1	5	6	4	4
69 X38639	TRUCK AMBULANCE+ 1/4 TON 4×4 W/E.	2	0	0	0	0	3	3
70 X38776	TRUCK AMBULANCE+ 3/4 TON 4×4 W/E.	2	0	0	18	1	0	0
71 X39735	TRUCK CARGO+ 3/4 TON 4×4 W/E.....	15	0	2	29	19	10	2
72 X39872	TRUCK CARGO+ 3/4 TON 4×4 W/WINCH W/E.	1	1	0	1	12	5	6
73 X40009	TRUCK CARGO+ 2-1/2 TON 6×6 W/E....	3	0	0	56	15	5	6
74 X40146	TRUCK CARGO+ 2-1/2 TON 6×6 W/WINCH W/E.	3	1	8	9	11	4	14
75 X40831	TRUCK CARGO+ 5 TON 6×6 LWB W/E....	0	0	0	0	16	6	13
76 X40968	TRUCK CARGO+ 5 TON 6×6 LWB W/ WINCH W/E.	0	0	0	0	15	8	7
77 X43845	TRUCK DUMP+ 5 TON 6×6 W/WINCH W/E.	0	0	4	0	0	0	0
78 X56586	TRUCK STAKE+ 5 TON 6×6 W/WINCH W/E	0	0	1	0	0	0	0
79 X57271	TRUCK TANK+ FUEL SERVICING 2-1/2 TON 6×6 W/E.	1	0	0	2	0	0	1
80 X59189	TRUCK TRACTOR+ 2-1/2 TON 6×6 W/ WINCH W/E.	0	0	0	1	0	0	0
81 X59326	TRUCK TRACTOR+ 5 TON 6×6 W/E.....	0	0	0	27	0	0	0
82 X59600	TRUCK TRACTOR+ 10 TON 6×6 W/DUAL MIDSHIP WN W/HI MTD 5TH WHL W/E.	0	0	0	2	0	0	0
83 X59874	TRUCK TRACTOR+ 10 TON 6×6 W/MID-SHIP WINCH W/LOW MTD 5TH WHL W/E.	0	0	3	0	0	0	0
84 X60833	TRUCK UTILITY+ 1/4 TON 4×4 W/E.....	48	3	10	34	33	31	34
85 X61244	TRUCK UTILITY+ 1/4 TON 4×4 CARRIER FOR 106MM RIFLE W/E.	0	0	0	0	0	6	0
86 X62340	TRUCK VAN+ SHOP 2-1/2 TON 6×6 W/E...	2	0	0	10	2	2	0
87 X63299	TRUCK WRECKER+ 5 TON 6×6 W/WINCH W/E.	1	0	1	3	1	1	2
	CLASS 7M—WEAPONS							
88 E56577	COMBAT ENGINEER VEHICLE FULL TRACKED+.	0	0	2	0	0	0	0
89 G02204	DETECTING SET MINE+ PTBL METALLIC AND NONMETALLIC.	0	0	0	0	1	0	0
90 G02341	DETECTING SET MINE+ PTBL METALLIC.	0	3	10	1	5	2	4
91 K57666	HOWITZER MEDIUM SELF PROPELLED+ 155MM.	0	0	0	0	18	0	0
92 L44575	LAUNCHER GRENADE+ 40 MILLIMETER.	9	31	25	12	48	94	19
93 L45123	LAUNCHER ROCKET+ MULTIPLE 115MM.	0	0	0	0	3	0	0

Table 1-57. Summary of Equipment—Separate Infantry Brigade (Mechanized)—Continued

1	2	3	4	5	6	7	8	9
LIN	Nomenclature	HHC (17-102G)	Armd cav trp (17-107G)	Engr co (5-127G)	Spt bn (29-75G)	FA bn 155-mm SP (6-375G)	Inf bn (mech) (7-45G)	Tk bn (17-35G)
94 L91975	MACHINE GUN CALIBER .50+ HB FLEXIBLE FOR GROUND USE.	4	1	0	0	0	24	22
95 L92386	MACHINE GUN 7.62 MILLIMETER+ LIGHT FLEXIBLE.	2	3	5	24	34	49	4
96 M68008	MORTAR 81 MILLIMETER+ ON MOUNT	0	0	0	0	0	9	0
97 M68282	MORTAR 4.2 INCH+ ON MOUNT	0	3	0	0	0	4	4
98 M75577	MOUNT TRIPOD MACHINE GUN+ HEAVY CALIBER 50.	4	1	0	0	0	24	22
99 M75714	MOUNT TRIPOD MACHINE GUN+ 7.62 MILLIMETER.	2	3	5	24	34	49	4
100 N96741	PISTOL CALIBER .45 AUTOMATIC+	48	76	39	33	71	256	323
101 R50543	RECOVERY VEHICLE FULL TRACKED+ LIGHT ARMORED.	0	1	0	0	1	5	0
102 R50680	RECOVERY VEHICLE FULL TRACKED+ MEDIUM.	0	0	0	1	0	0	5
103 R91107	REVOLVER CALIBER .38+2 INCH BARREL	1	0	0	0	0	0	0
104 R91244	REVOLVER CALIBER .38+4 INCH BARREL	5	0	0	0	0	0	0
105 R95114	RIFLE 7.62 MILLIMETER+	200	84	198	830	559	606	276
106 R95251	RIFLE 7.62 MILLIMETER+ AUTOMATIC WITH BIPOD.	0	6	23	19	0	54	0
107 R96484	RIFLE RECOILLESS 90 MILLIMETER+	1	0	0	0	0	18	0
108 R96758	RIFLE RECOILLESS 106 MILLIMETER+ ON MOUNT.	0	0	0	0	0	6	0
109 U56346	SUBMACHINE GUN CALIBER .45+	0	12	0	0	0	10	118
110 V12826	TANK COMBAT FULL TRACKED+ 76MM GUN.	0	9	0	0	0	0	0
111 V13100	TANK COMBAT FULL TRACKED+ 105MM GUN.	0	0	0	0	0	0	54
	CLASS 7N—SPECIAL WEAPONS							
112 H68063	FLAME THROWER PORTABLE+	0	0	0	0	0	9	0
	CLASS 7Q—GENERAL EQUIPMENT							
113 B83856	BOAT LANDING INFLATABLE+ ASSAULT CRAFT NYLON CLOTH 15 MAN.	0	0	9	0	0	0	0
114 B84404	BOAT RECONNAISSANCE+ PNEUMATIC 3 MAN.	0	0	6	0	0	0	0
115 J04716	FUEL SYSTEM SUPPLY POINT+ PORTABLE 6000 GAL CAP.	0	0	0	1	0	0	0
116 L85420	LUBRICAT-SERV UNIT PWR OPER+ TRLR MTD 15CF AIR COMP GAS DRVN WZD.	0	0	0	1	0	0	0
117 T10138	SHOP EQUIP CONTACT MAINT TRK MTD+.	0	0	1	5	0	0	0
118 T10275	SHOP EQUIP ELEC REP SEMITRLR MTD+ ARMY.	0	0	0	1	0	0	0
119 V12141	TANK AND PUMP UNIT LIQUID DISPENSING TRUCKMOUNTING+.	1	0	1	2	2	4	5
120 V19950	TANK UNIT LIQUID DISPENSING TRAILER MOUNTING+.	0	0	1	0	2	4	5

1-17. Separate Light Infantry Brigade

Figure 1-82 shows the organizational structure and personnel strengths for the separate light infantry brigade (TOE 77-100G). Table 1-59 provides a summary of equipment for the brigade.

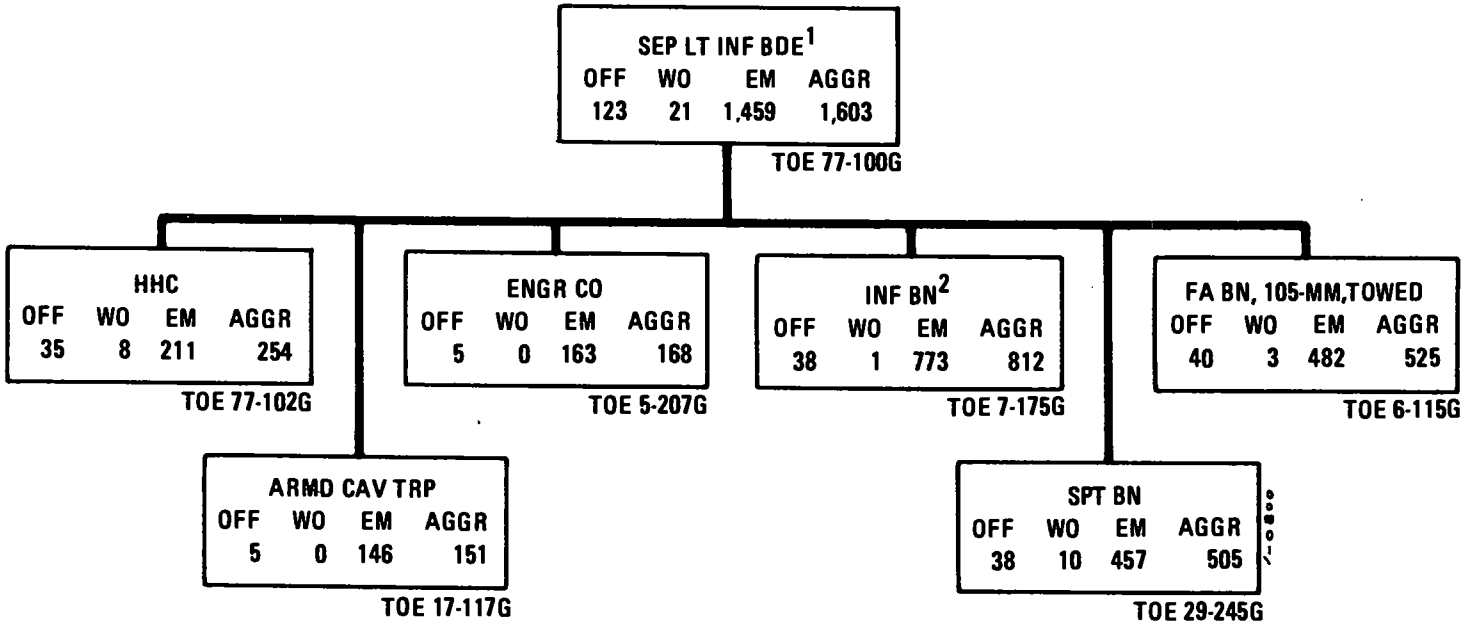

[1]Strength is for bde base only and does not include maneuver bn.

[2]Number of maneuver bn may vary.

Figure 1–82. Separate light infantry brigade.

Section V. ENGINEER AMPHIBIOUS UNITS

1-18. General

a. Engineer amphibious units are designed to provide personnel and units for performance of combat and combat support missions, when suitably augmented, and interim combat service support functions as part of an Army force executing assault landing operations. These amphibious units, whose specific capabilities are listed in paragraph 1-19, are employed in joint or unilateral operations in support of combat forces conducting ship-to-shore or major water-barrier-crossing operations.

b. Engineer amphibious units provide the following support:

(1) The engineer amphibious unit commander and commanders of shore party components serve as special staff assistants to the Army landing force commander and commanders of subordinate landing force echelons during planning for the amphibious attack.

(2) Engineer amphibious units provide command, control, and limited combat engineer support for battalion, brigade, division, and corps landing team shore parties. However, engineer amphibious units are supplemented with other combat support and combat service support units to provide shore parties to meet a specific tactical situation.

(3) Engineer amphibious assault units provide a means of ship-to-shore or shore-to-shore movement and cross-country mobility to assault landing teams. The use of amphibians, which provide both armor protection and mobility, makes possible a rapid, continuing movement to relatively deep initial objectives without delay at the landing beach. Amphibians also can deliver critical supplies direct to assaulting inland elements and expedite the evacuation of patients and prisoners of war without transfer on the beaches. To maintain an amphibious capability, amphibious vehicles in a combat service support role should be replaced by tracked carriers and wheeled vehicles as soon as practicable.

c. Engineer amphibious units are designed to operate either as control headquarters or in direct support of an amphibious operation. Engineer amphibious companies are allocated to an amphibious task force both in type and number in accordance with the anticipated tactical situation. The information in paragraph 1-19, representing the best data currently available, is based on FM 5-144 and recommended TOE plans.

1-19. Engineer TOE Shore Party Units

a. The engineer amphibious brigade coordinates and controls corps beach support area development initiated by multiple divisions or assumes control and substantially expands the beach support area development accomplished by a single assaulting division. It also provides the command and staff required to control the corps shore party and from one to four attached engineer amphibious groups.

b. The engineer amphibious group coordinates and controls beach support at division and provides the command and staff required to control the division shore party and from one to three engineer amphibious battalions, depending on the tactical situation.

c. The engineer amphibious battalion provides the command and control for the shore party of a brigade-size landing force during amphibious or shore-to-shore operations and further provides tactical amphibious mobility for dismounted combat units in the passage of water barriers. It consists of a headquarters and headquarters company, one engineer amphibious company, and two engineer amphibian assault companies.

d. The composition of the three echelons of shore parties is illustrated in a type of shore party troop list (table 1-60), which is based on two assault divisions landing abreast. Table 1-61 provides a summary of engineer amphibious units' weapons, ground support materiel, electronics, vehicles, and general equipment by class of supply.

Table 1-58. Summary of Equipment—Separate Airborne Brigade

1	2	3	4	5	6	7	8
LIN	Nomenclature	HHC (57-102G)	Armd cav trp (17-127G)	Engr co (5-137G)	Spt bn (29-105G)	FA bn 105-mm towed (6-215G)	Inf bn (7-35G)
	CLASS 2Q—GENERAL EQUIPMENT						
1 W98270	TRAILER PLATFORM WAREHOUSE+ 6000 LB CAP 108L×48W IN PNEUM.	0	0	0	9	0	0
	CLASS 7A—AIR						
2 K30645	HELICOPTER OBSERVATION+ OH-6A.	6	0	0	0	0	0
3 K31786	HELICOPTER UTILITY+ UH-1D.....	8	0	0	0	0	0
	CLASS 7B—GROUND SUPPORT						
4 E68694	COMP RCP PWR DRVN+ AIR REC AC 208-416V 60CY 3PH 15CFM 175 PSI.	0	0	0	1	0	0
5 E69105	COMP RCP PWR DRVN+ AIR REC GAS DRVN 5 CFM 175 PSI.	0	0	0	1	0	0
6 E69242	COMP RCP PWR DRVN+ AIR REC GAS DRVN 15 CFM 175 PSI.	0	0	0	0	1	0
7 E70064	COMP RCP PWR DRVN+ TRK 2 WHL PNEU TIRES GAS DRVN 5 CFM 175 PSI.	0	0	1	0	4	0
8 E73626	COMP RTY PWR DRVN+ AIR WHBRW FR 2 PNU TIRE GAS DRV 60 CFM 6.5 PSI.	0	0	0	0	0	2
9 F43077	CRANE WHL MTD+ 7 TON W/BOOM CRANE 24 FT W/BLK TKLE 9 FT.	0	0	0	1	0	0
10 J35835	GEN ST DSL ENG+ 15KW 60CY 3PH AC 120/208 240/416V SKID.	0	0	0	1	0	0
11 J41178	GENERATOR SET GASOLINE ENGINE TRAILER MTD+ PU 290/MR.	0	0	0	4	0	0
12 J41589	GENERATOR SET GASOLINE ENGINE TRAILER MTD+ PU-322/G.	0	0	0	1	0	0
13 J42685	GEN ST GAS ENG+ 0.3KW AC 115V 1PH 400CY DC 24 TO 35V.	0	2	0	0	0	2
14 J42959	GEN ST GAS ENG+ 0.5KW 60CY 1PH AC 120V SHK.	0	0	0	2	1	0
15 J43233	GEN ST GAS ENG+ 0.5KW 2 WIRE DC-28V SHK.	0	0	0	0	5	0
16 J43918	GEN ST GAS ENG+ 1.5KW 60CY 1PH 2 WIRE AC 120V SHOCK.	2	0	2	11	5	0
17 J44055	GEN ST GAS ENG+ 1.5KW DC 28V SHOCK.	2	0	1	4	4	2
18 J45699	GEN ST GAS ENG+ 3KW 60CY 1-3PH 120/240V 120/208V SKID SHOCK.	0	0	2	4	1	1
19 J47068	GEN ST GAS ENG+ 5KW 60CY 1-3PH AC 120/240 120/208V SKD-SHK MTD.	0	0	0	10	0	0
20 J74920	GRADER ROAD MOTORIZED+ DSL DRVN 10000 LB 12FT BLADE W/ LEAN FRTWHL.	0	0	2	0	0	0
21 J75239	SCRAPER EARTH MOVING GRADER-MOUNTING+ HYD OPRTD.	0	0	1	0	0	0
22 L76351	LOADER SCOOP TYPE+ DSL DRVN 4 WHLS 1-1/2 CU YD.	0	0	1	0	0	0
23 P91756	PUMP CENTRF+ GAS DRVN FRAME MTD 1-1/2 IN. 65GPM 50FT HD.	0	0	2	0	0	0
24 P96640	PUMPING ASSEMBLY FLAMMABLE LIQUID BULK TRANSFER+.	6	0	0	2	1	0

Table 1-58. Summary of Equipment—Separate Airborne Brigade—Continued

1	2	3	4	5	6	7	8
LIN	Nomenclature	HHC (57-102G)	Armd cav trp (17-127G)	Engr co (5-137G)	Spt bn (29-105G)	FA bn 105-mm towed (6-215G)	Inf bn (7-35G)
25 S10682	ROLLER AIR MOBILITY+ VIBRATING.	0	0	1	0	0	0
26 W80378	TRACTOR FULL TRCKD LOW SPD+ DSL-LGHT DBP W/BULDOZ SCARIF TETH PC.	0	0	2	0	0	0
27 W89557	TRACTOR WHEELED WAREHOUSE+ GAS 4000 LB.	0	0	0	1	0	0
28 X48846	TRUCK LIFT FORK AIRMBLE+ MULTI-FUEL 4000 LB CAP ROUGH TERRAIN.	0	0	0	2	0	0
29 X48914	TRUCK LIFT FORK+ DSL DRVN 6000 LB CAP ROUGH TERRAIN.	0	0	0	1	0	0
30 X49051	TRUCK LIFT FORK+ DSL DRVN 10000 LB CAP ROUGH TERRAIN.	0	0	0	1	0	0
31 Y36239	WATER PURIF SET+ PTBL 600 GPH..	0	0	1	0	0	0
	CLASS 7G—ELECTRONICS						
32 Q15414	RADAR SET+ AN/MPQ-4 LESS POWER	0	0	0	0	1	0
33 Q16109	RADAR SET+ AN/PPS-5 LESS POWER.	0	2	0	0	0	0
34 Q32756	RADIO SET AN/GRC-106.....	4	0	0	0	0	1
35 Q33474	RADIO SET AN/GRC-125.....	2	10	1	0	20	25
36 Q35454	RADIO SET+ AN/PRC-6.....	2	0	0	0	0	54
37 Q42092	RADIO SET+ AN/URC-10.....	14	0	0	0	0	0
38 Q45779	RADIO SET AN/VRC-12.....	0	3	0	0	0	0
39 Q50421	RADIO SET AN/VRC-24.....	2	0	0	0	0	1
40 Q53001	RADIO SET AN/VRC-46.....	22	3	4	7	20	20
41 Q54154	RADIO SET AN/VRC-47.....	6	6	2	3	6	2
42 Q55114	RADIO SET AN/VRC-49.....	2	0	0	0	1	1
43 Q55510	RADIO SET AN/VRC-53.....	0	5	0	0	0	0
44 U81707	SWITCHBOARD TELEPHONE MANUAL+ SB-22/PT.	2	1	0	2	6	6
45 U82255	SWITCHBOARD TELEPHONE MANUAL+ SB-86/P.	1	0	0	1	0	0
46 U82529	SWITCHBOARD TELEPHONE MANUAL+ SB-993/GT.	0	0	5	1	6	5
47 V30252	TELEPHONE SET+ TA-1/PT.....	0	0	12	0	0	60
48 V30937	TELEPHONE SET+ TA-264/PT.....	0	0	0	0	1	0
49 V31211	TELEPHONE SET+ TA-312/PT.....	38	10	10	39	122	72
	CLASS 7K—TACTICAL VEHICLES						
50 G34805	DOLLY SET LIFT TRANSPORTABLE SHELTER+ 2-1/2 TON.	0	0	0	27	0	0
51 S72024	SEMITRAILER STAKE+ 12 TON 4 WHEEL W/E.	0	0	0	1	0	0
52 W94441	TRAILER BASIC UTILITY+ 2-1/2 TON 2 SINGLE WHEELS W/E.	0	0	3	0	0	0
53 W95400	TRAILER CARGO+ 1/4 TON 2 WHEEL W/E.	36	12	6	24	9	29
54 W95537	TRAILER CARGO+ 3/4 TON 2 WHEEL W/E.	16	4	2	45	24	14
55 W95811	TRAILER CARGO+ 1-1/2 TON 2 WHEEL W/E.	0	0	0	13	5	4
56 W98825	TRAILER TANK+ WATER 400 GALLON 1-1/2 TON 2 WHEEL W/E.	1	1	1	4	4	4

Table 1-58. Summary of Equipment—Separate Airborne Brigade—Continued

1	2		3	4	5	6	7	8
	LIN	Nomenclature	HHC (57-102G)	Armd cav trp (17-127G)	Engr co (5-137G)	Spt bn (29-105G)	FA bn 105-mm towed (6-215G)	Inf bn (7-35G)
57	X38639	TRUCK AMBULANCE+ 1/4 TON 4×4 W/E.	2	0	0	9	1	6
58	X39735	TRUCK CARGO+ 3/4 TON 4×4 W/E---	11	3	0	46	17	13
59	X39872	TRUCK CARGO+ 3/4 TON 4×4 W/ WINCH W/E.	5	1	12	4	29	1
60	X40009	TRUCK CARGO+ 2-1/2 TON 6×6 W/E.	1	1	0	13	5	6
61	X40146	TRUCK CARGO+ 2-1/2 TON 6×6 W/WINCH W/E.	2	2	1	4	5	2
62	X43434	TRUCK DUMP+ 2-1/2 TON 6×6 W/WINCH W/E.	0	0	7	0	0	0
63	X55627	TRUCK PLATFORM UTILITY+ 1/2 TON 4×4 W/E.	3	0	9	1	8	41
64	X59326	TRUCK TRACTOR+ 5 TON 6×6 W/E--	0	0	0	1	0	0
65	X60833	TRUCK UTILITY+ 1/4 TON 4×4 W/E-	44	29	6	27	40	35
66	X63025	TRUCK WRECKER+ CRANE 2-1/2 TON 6×6 W/WINCH W/E.	0	0	0	0	1	0
67	X63094	TRUCK WRECKER+ 3/4 TON 4×4 W/E.	0	0	0	2	0	0
		CLASS 7M—WEAPONS						
68	A90117	ARMAMENT SUBSYSTEM HELICOPTER 7.62 MILLIMETER MACHINE GUN+ LIGHT.	8	0	0	0	0	0
69	A93124	ARMORED RECONNAISSANCE AIRBORNE ASSAULT VEHICLE+.	0	6	0	0	0	0
70	G02204	DETECTING SET MINE+ PTBL METALLIC AND NONMETALLIC.	0	0	4	0	1	0
71	G02341	DETECTING SET MINE+ PTBL METALLIC.	0	0	10	1	4	3
72	K57529	HOWITZER TOWED+ 105 MILLIMETER.	0	0	0	0	18	0
73	L44575	LAUNCHER GRENADE+ 40 MILLIMETER.	10	28	21	2	18	85
74	L91975	MACHINE GUN CALIBER .50+ HB FLEXIBLE FOR GROUND USE.	0	0	0	0	0	7
75	L92386	MACHINE GUN 7.62 MILLIMETER+ LIGHT FLEXIBLE.	2	19	4	11	20	24
76	M68008	MORTAR 81 MILLIMETER+ ON MOUNT.	0	3	0	0	0	9
77	M68282	MORTAR 4.2 INCH+ ON MOUNT-----	0	0	0	0	0	4
78	M75577	MOUNT TRIPOD MACHINE GUN+ HEAVY CALIBER 50.	0	0	0	0	0	7
79	M75714	MOUNT TRIPOD MACHINE GUN+ 7.62 MILLIMETER.	2	19	4	11	20	24
80	N96741	PISTOL CALIBER .45 AUTOMATIC+---	53	52	22	23	40	248
81	R50543	RECOVERY VEHICLE FULL TRACKED+ LIGHT ARMORED.	0	1	0	0	0	0
82	R91107	REVOLVER CALIBER .38+ 2 INCH BARREL.	1	0	0	0	0	0
83	R91244	REVOLVER CALIBER .38+ 4 INCH BARREL.	31	0	0	2	0	0
84	R94977	RIFLE 5.56 MILLIMETER+ W/E------	188	103	134	578	435	561
85	R96758	RIFLE RECOILLESS 106 MILLIMETER+ ON MOUNT.	0	0	0	0	0	12
86	U56346	SUBMACHINE GUN CALIBER .45+----	0	7	0	0	0	0

Table 1-58. Summary of Equipment—Separate Airborne Brigade—Continued

1	2	3	4	5	6	7	8
LIN	Nomenclature	HHC (57-102G)	Armd cav trp (17-127G)	Engr co (5-137G)	Spt bn (29-105G)	FA bn 105-mm towed (6-215G)	Inf bn (7-35G)
	CLASS 7N—SPECIAL WEAPONS						
87 H68063	FLAME THROWER PORTABLE+	0	0	0	0	0	6
	CLASS 7Q—GENERAL EQUIPMENT						
88 B84404	BOAT RECONNAISSANCE+ PNEUMATIC 3 MAN.	0	0	3	0	0	0
89 V12141	TANK AND PUMP UNIT LIQUID DISPENSING TRUCKMOUNTING+.	1	0	0	0	0	0
90 V19950	TANK UNIT LIQUID DISPENSING TRAILER MOUNTING+	0	0	0	2	0	0

Table 1-59. Summary of Equipment—Separate Light Infantry Brigade

1	2	3	4	5	6	7	8
LIN	Nomenclature	HHC (77-102G)	Armd cav trp (17-117G)	Engr co (5-207G)	Spt bn (29-245G)	FA bn 105-mm towed (6-115G)	Inf bn (7-175G)
	CLASS 2A—AIR						
1 X23227	TRANSPORTER AIRMOBILE+ HYD LIFT--FOR SHELTER AND X-4 CONTAINER.	0	0	0	2	0	0
	CLASS 7A—AIR						
2 K30645	HELICOPTER OBSERVATION+ OH-6A.	8	0	0	0	0	0
	CLASS 7B—GROUND SUPPORT						
3 E67735	COMP RCP PWR DRVN+ BASE AC 115V-60CY 1 PH 2.7 CFM 80 PSI.	0	0	0	1	0	0
4 E69105	COMP RCP PWR DRVN+ AIR REC GAS DRVN 5 CFM 175 PSI.	0	0	0	3	0	0
5 E69242	COMP RCP PWR DRVN+ AIR REC GAS DRVN 15 CFM 175 PSI.	0	0	0	1	1	0
6 E70064	COMP RCP PWR DRVN+ TRK 2 WHL PNEU TIRES GAS DRVN 5 CFM 175 PSI.	1	2	1	2	4	1
7 J41452	GENERATOR SET GASOLINE ENGINE TRAILER MTD+ PU-304 MPQ-4A.	0	0	0	0	1	0
8 J41589	GENERATOR SET GASOLINE ENGINE TRAILER MTD+ PU-322/G.	0	0	0	1	0	0
9 J42000	GENERATOR SET GASOLINE ENGINE TRAILER MTD+ PU-474/U.	0	0	0	5	0	0
10 J42959	GEN ST GAS ENG+ 0.5KW 60CY 1PH AC 120V SHK.	0	0	0	1	1	0
11 J43233	GEN ST GAS ENG+ 0.5KW 2 WIRE DC—28V SHK.	0	0	0	1	9	0

Table 1-59. Summary of Equipment—Separate Light Infantry Brigade—Continued

1	2	3	4	5	6	7	8
LIN	Nomenclature	HHC (77-102G)	Armd cav trp (17-117G)	Engr co (5-207G)	Spt bn (29-245G)	FA bn 105-mm towed (6-115G)	Inf bn (7-175G)
12 J43918	GEN ST GAS ENG+ 1.5KW 60CY 1PH 2 WIRE AC 120V SHOCK.	4	2	3	13	8	1
13 J44055	GEN ST GAS ENG+ 1.5KW DC 28V SHOCK.	2	0	0	5	3	1
14 J45699	GEN ST GAS ENG+ 3KW 60CY 1-3PH 120/240V 120/208V SKID SHOCK.	0	0	3	3	0	1
15 J47068	GEN ST GAS ENG+ 5KW 60CY 1-3PH AC 120/240 120/208V SKD-SHK MTD.	0	0	0	10	0	0
16 J74852	GRADER ROAD MOTORIZED+ DSL DRVN-HVY 6X4 FRONT-WHL STEER.	0	0	2	0	0	0
17 P92030	PUMP CENTRF+ GAS DRVN FRAME MTD-2 IN 125 GPM 50 FT HD.	0	0	1	0	0	0
18 P96640	PUMPING ASSEMBLY FLAMMABLE LIQUID BULK TRANSFER+.	3	9	0	5	1	0
19 W80789	TRACTOR FULL TRCKD LOW SPD+ DSL MED W/ANGLEDOZ SCARIF.	0	0	2	0	0	0
20 X48914	TRUCK LIFT FORK+ DSL DRVN 6000 LB CAP ROUGH TERRAIN.	0	0	0	2	0	0
21 Y35486	WATER PURIF EQUIP SET+ TRK MTD DIATOMITE FILTER 1500 GPH (ARMY).	0	0	1	0	0	0
	CLASS 7G—ELECTRONICS						
22 Q15414	RADAR SET+ AN/MPQ-4 LESS POWER.	0	0	0	0	1	0
23 Q16109	RADAR SET+ AN/PPS-5 LESS POWER.	0	2	0	0	0	0
24 Q32756	RADIO SET AN/GRC-106	4	0	0	0	0	2
25 Q33474	RADIO SET AN/GRC-125	5	9	12	1	21	20
26 Q35454	RADIO SET+ AN/PRC-6	0	0	0	0	0	54
27 Q38299	RADIO SET+ AN/PRC-77	0	0	1	0	0	0
28 Q42092	RADIO SET+ AN/URC-10	8	0	0	0	0	0
29 Q45779	RADIO SET AN/VRC-12	0	3	0	0	0	0
30 Q50421	RADIO SET AN/VRC-24	2	0	0	0	0	2
31 Q53001	RADIO SET AN/VRC-46	21	11	4	8	18	2
32 Q54154	RADIO SET AN/VRC-47	6	9	2	5	1	1
33 Q55114	RADIO SET AN/VRC-49	3	0	0	0	10	1
34 Q55510	RADIO SET AN/VRC-53	0	5	0	0	0	0
35 U81707	SWITCHBOARD TELEPHONE MANUAL+ SB-22/PT.	2	1	0	4	7	3
36 U82529	SWITCHBOARD TELEPHONE MANUAL+ SB-993/GT.	0	0	5	2	6	6
37 V30252	TELEPHONE SET+ TA-1/PT	8	0	12	1	8	55
38 V30937	TELEPHONE SET+ TA-264/PT	0	0	0	0	1	0
39 V31211	TELEPHONE SET+ TA-312/PT	36	13	8	51	116	56
40 V41968	TELETYPEWRITER SET+ AN/GGC-3.	1	0	0	2	0	0
41 V42105	TELETYPEWRITER SET+ AN/PGC-1.	1	0	0	2	0	0
	CLASS 7K—TACTICAL VEHICLES						
42 E02944	CHASSIS TRAILER+ 2-1/2 TON TRAILING ARM 2 WHL.	0	0	0	1	0	0
43 G34805	DOLLY SET LIFT TRANSPORTABLE SHELTER+ 2-1/2 TON.	0	0	0	38	0	0

Table 1-59. Summary of Equipment—Separate Light Infantry Brigade—Continued

1	2	3	4	5	6	7	8
LIN	Nomenclature	HHC (77-102G)	Armd cav trp (17-117G)	Engr co (5-207G)	Spt bn (29-245G)	FA bn 105-mm towed (6-115G)	Inf bn (7-175G)
44 G34815	DOLLY SET LIFT TRANSPORTABLE SHELTER+ 5-1/4 TON W/E.	0	0	0	31	0	0
45 S70517	SEMITRAILER LOW BED+ 25 TON 4 WHEEL W/E.	0	0	2	0	0	
46 W94030	TRAILER AMMUNITION+ 1/1-2 TON 2 WHEEL W/E.	0	0	0	0	27	0
47 W94441	TRAILER BASIC UTILITY+ 2-1/2 TON 2 SINGLE WHEELS W/E.	0	0	3	0	0	0
48 W95400	TRAILER CARGO+ 1/4 TON 2 WHEEL W/E.	36	11	5	28	7	22
49 W95537	TRAILER CARGO+ 3/4 TON 2 WHEEL W/E.	14	4	1	33	15	7
50 W95811	TRAILER CARGO+ 1-1/2 TON 2 WHEEL W/E.	3	0	2	15	8	3
51 W98825	TRAILER TANK+ WATER 400 GALLON 1/2 TON 2 WHEEL W/E.	1	1	1	3	4	5
52 X38639	TRUCK AMBULANCE+ 1/4 TON 4×4 W/E.	2	0	0	9	1	2
53 X39735	TRUCK CARGO+ 3/4 TON 4×4 W/E...	13	3	0	30	15	7
54 X39872	TRUCK CARGO+ 3/4 TON 4×4 W/WINCH W/E.	3	4	3	6	23	2
55 X39940	TRUCK CARGO+ 1-1/4 TON 6×6 W/E.	4	0	0	0	4	5
56 X40009	TRUCK CARGO+ 2-1/2 TON 6×6 W/E.	0	1	0	28	10	4
57 X40146	TRUCK CARGO+ 2-1/2 TON 6×6 W/WINCH W/E.	4	2	3	2	50	4
58 X43434	TRUCK DUMP+ 2-1/2 TON 6×6 W/WINCH W/E.	0	0	18	0	0	0
59 X59874	TRUCK TRACTOR+ 10 TON 6×6 W/MIDSHIP WINCH W/LOW MTD 5TH WHL W/E.	0	0	2	0	0	0
60 X60833	TRUCK UTILITY+ 1/4 TON 4×4 W/E.	45	28	5	29	47	23
61 X61244	TRUCK UTILITY+ 1/4 TON 4×4 CARRIER FOR 106 MM RIFLE W/E.	0	0	0	0	0	8
62 X63025	TRUCK WRECKER+ CRANE 2-1/2 TON 6×6 W/WINCH W/E.	0	0	0	0	1	0
63 X63299	TRUCK WRECKER+ 5 TON 6×6 W/ WINCH W/E.	0	0	0	3	0	0
	CLASS 7M—WEAPONS						
64 A90154	ARMAMENT SUBSYSTEM HELICOPTER 7.62MM MACHINE GUN+ HIGH RATE.	8	0	0	0	0	0
65 A93124	ARMORED RECONNAISSANCE AIRBORNE ASSAULT VEHICLE+.	0	6	0	0	0	0
66 G02204	DETECTING SET MINE+ PTBL METALLIC AND NONMETALLIC.	0	3	8	0	4	2
67 G02341	DETECTING SET MINE+ PTBL METALLIC.	0	3	10	1	4	7
68 K57392	HOWITZER LIGHT TOWED+ 105 MILLIMETER.	0	0	0	0	18	0
69 L44575	LAUNCHER GRENADE+ 40 MILLIMETER.	9	28	21	0	18	86
70 L92386	MACHINE GUN 7.62 MILLIMETER+ LIGHT FLEXIBLE.	2	19	7	7	27	20

Table 1–59. Summary of Equipment—Separate Light Infantry Brigade—Continued

1	2	3	4	5	6	7	8
LIN	Nomenclature	HHC (77-102G)	Armd cav trp (17-117G)	Engr co (5-207G)	Spt bn (29-245G)	FA bn 105-mm towed (6-115G)	Inf bn (7-175G)
71 M68008	MORTAR 81 MILLIMETER+ ON MOUNT.	0	3	0	0	0	13
72 M75714	MOUNT TRIPOD MACHINE GUN+ 7.62 MILLIMETER.	2	19	7	7	27	20
73 N96741	PISTOL CALIBER .45 AUTOMATIC+---	63	54	23	17	42	233
74 R50543	RECOVERY VEHICLE FULL TRACKED+ LIGHT ARMORED.	0	1	0	1	0	0
75 R91107	REVOLVER CALIBER .38+ 2 INCH BARREL.	1	0	0	0	0	0
76 R91244	REVOLVER CALIBER .38+ 4 INCH BARREL.	9	0	0	1	0	0
77 R94977	RIFLE 5.56 MILLIMETER+ W/E------	180	144	203	488	483	579
78 R96484	RIFLE RECOILLESS 90 MILLIMETER+.	0	0	0	0	0	18
79 R96758	RIFLE RECOILLESS 106 MILLIMETER+ ON MOUNT.	0	0	0	0	0	8
80 U56346	SUBMACHINE GUN CALIBER .45+----	0	21	0	0	0	0
	CLASS 7N—SPECIAL WEAPONS						
81 H68063	FLAME THROWER PORTABLE+------	0	0	0	0	0	9
	CLASS 7Q—GENERAL EQUIPMENT						
82 B84404	BOAT RECONNAISSANCE+ PNEUMATIC 3 MAN.	0	0	3	0	0	0
83 T10138	SHOP EQUIP CONTACT MAINT TRK MTD+.	0	0	1	1	0	0
84 V12141	TANK AND PUMP UNIT LIQUID DISPENSING TRUCKMOUNTING+.	0	0	0	1	0	0
85 V19950	TANK UNIT LIQUID DISPENSING TRAILER MOUNTING+.	0	0	1	1	0	0

Section VI. AIRBORNE SPECIAL FORCES GROUP

1–20. The Role of Special Forces

Table 1–60. A Type of Shore Party Troop List for a Two-Division Assault

1	1	2	3	4	5
	Unit	TOE	Per BDELT	Per div	Per corps
	Engr amph units				
2	HHC, engr amph bde----------	5–401G	----------		1
3	HHC, engr amph gp----------	5–402G	--------	1	2
4	Engr amph bn----------	5–405G	1	2	4
	Cbt spt units				
5	HHC, engr cbt bde, corps----------	5–101G	----------		1
6	HHC, engr cbt gp----------	5–52G	--------	1	2

See footnotes at end of table..

Table 1–60. A Type of Shore Party Troop List for a Two-Division Assault—Continued

1	1 Unit	2 TOE	3 Per BDELT	4 Per div	5 Per corps
	Cbt spt units (continued)				
7	Engr cbt bn	5–35G	1	2	4
8	Engr pl const spt co	5–177G		1	2
9	Engr pl const spt co plt	5–177G	1		
10	HHD, sig gp	11–122G			1
11	Corps sig bn	11–15G			1
12	Comd op co, corps sig bn	11–17G			2
13	Comd op co, corps sig bn, plt	11–17G	1		
14	Fld op co	11–18D		1	
15	Fld op co plt	11–18D	1		
16	HHD, cml smoke genr bn	3–266G		1	2
17	Cml smoke genr co	3–267G	1	4	8
18	HHD, MP gp	19–272G			1
19	HHD, MP bn	19–76G		1	1
20	MP co	19–77G	1(–)	2	4
21	MP phys scty co	19–97G			1
22	MP ESCRG co	19–47G		1	1
23	MP det (crim inves)	19–500G (LA)			1
24	HHD, CA bn, with func tms	41–500G			1
25	HQ, CA co, with func tms	41–500G		1	
26	Sig small HQ op co	11–147G		1	
	Cbt svc spt units (COSCOM)				
27	HHC, corps spt bde	54–22G		1	1
28	HHC, spt gp	29–102G	1(-)	1	2
29	Stk con co, spt bde	29–404T		1 (–)	1
30	Aslt spt hel co	1–258H		1	2
31	Aslt spt hel co plt	1–258H	1		
32	HHC, trans comp gp	55–52G			1
33	HHD, TMT bn	55–16G		1	2
34	Trans lt-mdm trk co	55–67G	1	1	3
35	Trans car co	55–19G			1
36	Trans car co plt	55–19G		1	
37	Trans hv trk co	55–28G			1
38	Trans hv trk co plt	55–28G	1	1	
39	Trans lt trk co	55–17G			1
40	Trans lt trk co plt	55–17G		1	
41	Trans tml trf co	55–118G			1
42	Trans tml trf co plt	55–118G		1	
43	HHD, trans tml bn	55–116E		1	2
44	Trans lt amph co	55–138G		1	2
45	Trans lt amph co plt	55–138G	1		
46	Trans TS co	55–117G		1	4
47	Trans acft DS co	55–457G		1	2
48	HHD, med gp	8–122G		1	1
49	HHD, med bn	8–126G	1		2
50	Cbt spt hosp	8–123T		1	2
51	Evac hosp	8–581G		1	4
52	Med coll co	8–129G	2 (–)	1	1
53	Med clr co	8–128G		1	2
54	Med clr co plt	8–128G	1		
55	Med amb co	8–127G		1	2
56	Med det (sup)	8–610H (BB)		1	
57	Med det (sup)	8–610H (BC)			1
58	Med det (hel amb)	8–660H (RA)		1	2
59	Prof svc tms	8–630H		As rqr	As rqr

See footnotes at end of table..

Table 1–60. A Type of Shore Party Troop List for a Two-Division Assault—Continued

1	1 Unit	2 TOE	3 Per BDELT	4 Per div	5 Per corps
	Cbt svc spt units (COSCOM) (continued)				
60	HHC, ord gp, ammo, DS/GS	9–22G			1
61	HHC, ord bn, ammo, DS/GS	9–36G		1	2
62	Ord co, ammo, convl, DS/GS	9–38G		1	3
63	Ord co, ammo, convl, DS/GS, sec	9–38G	1	1 (–)	2
64	Ord GM GS co	9–227E			1
65	Ord GM GS co plt	9–227E		1	
66	EOD det	9–520G	1	1	3
67	HHD, P&A bn	12–66G			1
68	PSC (type E)	12–67G		1	6
69	PSC (type D)	12–67G	1		
70	Pstl svc org (APO)	12–550G [a]		1	2
71	Repl det (reg)	12–560G [b]		2	6
72	Admin svc co	12–570G			1
73	Admin svc det	12–570G		1	
74	Fin DS co	14–17G		1	6
75	Fin sec	14–500G [c]	1		
76	DPU (type A)	29–550T		1	
77	DPU (type B)	29–550T			1
78	DPU (type C)	29–550T	1		
79	Lt maint co, DS	29–207G	1	1	3
80	HHD, maint DS or GS bn	29–136G	1	1	3
81	Hv equip GS maint co	29–137G	1	1	3
82	Coll and clas co	29–139G			1
83	LE GS maint co	29–134G			2
84	HHC, S&S GS bn, fwd	29–116G	1	1	2
85	Gen sup co, GS	29–118G		1	3
86	Gen sup co, GS, plt	28–118G	1		
87	Rep parts sup co, GS	29–119G		1	2
88	Rep parts sup co, GS, plt	29–119G	1		
89	Fld svc co, GS, fwd	29–114G		1	2
90	Petrl sup co	10–227G		1	
91	HHC, petrl op bn	10–206G			1
92	Petrl op co	10–207G			1

[a] Tm AB, FE, HE, JA.
[b] Tm AB, CB, 4 FA, GB.
[c] Tm AD,FF.

Table 1–61. Summary of Equipment—Engineer Amphibious Units

1	2	3	4	5	6	7
LIN	Nomenclature	HHC engr amph bde (5–401G)	HHC engr amph gp (5–402G)	HHC engr amph bn (5–406G)	Engr amph aslt co (5–407G)	Engr amph co (5–408G)
	CLASS 7B—GROUND SUPPORT					
1 D89675	CHAMBER RECOMPRESSION DIVERS+ 100 PSI	0	0	1	0	0
2 E69242	COMP RCP PWR DRVN+ AIR REC GAS DRVN 15 CFM 175 PSI.	0	0	1	1	0
3 E70064	COMP RCP PWR DRVN+ TRK 2 WHL PNEU TIRES GAS DRVN 5 CFM 175 PSI.	1	1	1	0	1
4 F39378	CRANE WHEEL MTD+ 20 TON 3/4 CU YD ROUGH TERRAIN.	0	0	0	0	2
5 J43918	GEN ST GAS ENG+ 1.5KW 60CY 1PH 2 WIRE AC 120V SHOCK.	2	0	3	1	5

Table 1-61. Summary of Equipment—Engineer Amphibious Units—Continued

1	2	8	4	5	6	7
LIN	Nomenclature	HHC engr amph bde (5-401G)	HHC engr amph gp (5-402G)	HHC engr amph bn (5-406G)	Engr amph aslt co (5-407G)	Engr amph co (5-408G)
6 J44055	GEN ST GAS ENG+ 1.5KW DC 28V SHOCK	3	2	2	1	4
7 J45699	GEN ST GAS ENG+ 3KW 60CY 1-3PH 120/240V 120/208V SKID SHOCK.	0	0	2	0	0
8 J47068	GEN ST GAS ENG+ 5KW 30CY 1-3PH AC 120/240 120/208V SKD-SHK MTD.	2	0	1	1	4
9 P11866	PNEUMATIC TOOL AND COMPRESSOR OUTFIT+ 250 CFM TRLR MTD.	0	0	0	0	1
10 P96640	PUMPING ASSEMBLY FLAMMABLE LIQUID BULK TRANSFER+.	0	1	0	0	0
11 W76816	TRACTOR FULL TRCKD LOW SPD+ DSL MED DBP W/BULDOZ W/SCARIF WINCH.	0	0	0	0	4
	CLASS 7G—ELECTRONICS					
12 Q32756	RADIO SET AN/GRC-106	3	2	1	0	4
13 Q33474	RADIO SET AN/GRC-125	0	0	0	31	9
14 Q50421	RADIO SET AN/VRC-24	0	0	6	1	0
15 Q53001	RADIO SET AN/VRC-46	4	1	4	2	2
16 Q54154	RADIO SET AN/VRC-47	15	5	17	0	6
17 Q55114	RADIO SET AN/VRC-49	0	2	1	0	4
18 Q55510	RADIO SET AN/VRC-53	0	0	9	4	4
19 U81707	SWITCHBOARD TELEPHONE MANUAL+ SB-22/PT.	0	0	2	0	4
20 U82255	SWITCHBOARD TELEPHONE MANUAL+ SB-86/P.	1	1	0	0	1
21 U82529	SWITCHBOARD TELEPHONE MANUAL+ SB-993/GT.	0	0	0	1	0
22 V31211	TELEPHONE SET+ TA-312/PT	40	40	20	6	40
	CLASS 7K—TACTICAL VEHICLES					
23 S70517	SEMITRAILER LOW BED+ 25 TON 4 WHEEL W/E.	0	0	0	0	4
24 S70791	SEMITRAILER LOW BED+ 60 TON 8 WHEEL W/E.	0	0	2	1	0
25 W94441	TRAILER BASIC UTILITY+ 2-1/2 TON 2 SINGLE WHEELS W/E.	0	0	0	0	6
26 W95400	TRAILER CARGO+ 1/4 TON 2 WHEEL W/E	16	9	15	1	6
27 W95537	TRAILER CARGO+ 3/4 TON 2 WHEEL W/E	9	13	16	1	12
28 W95811	TRAILER CARGO+ 1-1/2 TON 2 WHEEL W/E	5	5	8	1	6
29 W98825	TRAILER TANK+ WATER 400 GALLON 1-1/2 TON 2 WHEEL W/E.	1	1	1	1	1
30 X38776	TRUCK AMBULANCE 3/4 TON 4X4 W/E	0	0	2	0	0
31 X39735	TRUCK CARGO+ 3/4 TON 4X4 W/E	10	0	9	0	0
32 X39872	TRUCK CARGO+ 3/4 TON 4X4 W/WINCH W/E	0	13	9	2	13
33 X40009	TRUCK CARGO+ 2-1/2 TON 6X6 W/E	6	3	9	0	0
34 X40146	TRUCK CARGO+ 2-1/2 TON 6X6 W/WINCH W/E	1	3	3	4	4
35 X43845	TRUCK DUMP+ 5 TON 6X6 W/WINCH W/E	0	0	0	0	11
36 X59052	TRUCK TRACTOR+ 2-1/2 TON 6X6 W/E	0	0	2	0	0
37 X59189	TRUCK TRACTOR+ 2-1/2 TON 6X6 W/WINCH W/E.	0	0	0	1	1
38 X59600	TRUCK TRACTOR+ 10 TON 6X6 W/DUAL MID-SHIP WN W/HI MID 5TH WHL W/E.	0	0	2	1	0
39 X59874	TRUCK TRACTOR+ 10 TON 6X6 W/MIDSHIP WINCH W/LOW MTD 5TH WHL W/E.	0	0	0	0	4
40 X60833	TRUCK UTILITY+ 1/4 TON 4X4 W/E	16	9	15	1	6
41 X63299	TRUCK WRECKER+ 5 TON 6X6 W/WINCH W/E	0	0	2	0	0

Table 1-61. Summary of Equipment—Engineer Amphibious Units—Continued

1	2	3	4	5	6	7
LIN	Nomenclature	HHC engr amph bde (5-401G)	HHC engr amph gp (5-402G)	HHC engr amph bn (5-406G)	Engr amph aslt co (5-407G)	Engr amph co (5-408G)
	CLASS 7M—WEAPONS					
42 E56577	COMBAT ENGINEER VEHICLE FULL TRACKED+.	0	0	0	0	2
43 G02204	DETECTING SET MINE+ PTBL METALLIC AND NONMETALLIC.	1	2	0	0	0
44 G02341	DETECTING SET MINE+ PTBL METALLIC.....	1	2	0	0	6
45 L37030	LANDING VEHICLE TRACKED+ ENGINEER...	0	0	10	0	0
46 L37118	LANDING VEHICLE TRACKED+ PERSONNEL..	0	0	0	30	0
47 L37122	LANDING VEHICLE TRACKED+ PERSONNEL COMMAND.	0	0	6	0	0
48 L37132	LANDING VEHICLE TRACKED+ RECOVERY...	0	0	0	1	0
49 L92386	MACHINE GUN 7.62 MILLIMETER+ LIGHT FLEXIBLE.	1	3	4	0	4
50 M75714	MOUNT TRIPOD MACHINE GUN+ 7.62 MILLIMETER.	1	3	4	0	4
51 N96741	PISTOL CALIBER .45 AUTOMATIC+.....	23	16	66	99	10
52 R95114	RIFLE 7.62 MILLIMETER+.....	80	66	191	28	159
53 R95251	RIFLE 7.62 MILLIMETER+ AUTOMATIC WITH BIPOD.	7	7	8	8	12
	CLASS 7Q—GENERAL EQUIPMENT					
54 G32473	DIVING EQUIP SET+ 1 PERSON SCUBA OPEN CIRCUIT.	0	0	6	0	0
55 L67234	LIGHTER AMPHIBIOUS+ SELF PROPELLED 5 TON.	0	0	0	0	4
56 L85420	LUBRICAT-SERV UNIT PWR OPER+ TRLR MTD 15CF AIR COMP GAS DRVN WZD.	0	0	2	1	1
57 T10138	SHOP EQUIP CONTACT MAINT TRK MTD+....	0	0	3	0	2
58 T13152	SHOP EQUIP ORGANZL REP LIGHT TRK MTD+.	0	0	1	0	0
59 V12141	TANK AND PUMP UNIT LIQUID DISPENSING TRUCKMOUNTING+.	1	0	0	0	0

The role of the special forces is to contribute to the accomplishment of whatever missions and responsibilities are assigned to the U.S. Army. Therefore, the airborne special forces group is a multipurpose force that, by organization, flexible command arrangements, adjusted logistic and fiscal procedures, and specially trained personnel, can address a variety of missions. As the organization within the Army responsible for unconventional warfare (UW), special forces are prepared to assume UW missions during any type of conflict. Since the option for UW is selective, special forces are able to employ these specially trained assets on other appropriate missions that contribute to the Army's overall mission.

1-21. The Capabilities of the Airborne Special Forces Group

a. General. Airborne special forces groups are the major TOE units within the U.S. Army Special Forces and provide command, control, administration, and support for assigned operational detachments. The special forces group can provide flexible responses to both strategic and tactical missions. It can undertake a variety of tasks and missions in many modes and configurations; under circumstances and in environments not customarily envisioned for regular forces; and, most importantly, in all levels of conflict. Special forces may participate either in a primary role or in a supporting role in conjunction with other forces or agencies. Deployment for operations may involve only selected individuals or detachments with specific capabilities, or it may require one or more special forces groups.

b. Organization. Figure 1-83 shows the organizational structure for the airborne special forces group and its subordinate elements.

c. Mission and Capabilities.

(1) *Mission.* The mission of the U.S. Army Special Forces is to—

(*a*) Plan and conduct UW operations.

(*b*) Plan, conduct, and support stability operations.

(*c*) Plan and conduct direct action missions that are peculiar to special forces because of their organization, training, equipment, and psychological preparation.

(2) *Capabilities.* Special forces possess specific capabilities—

(*a*) To plan and conduct military operations that include, but are not restricted to, the following:

1. Develop, organize, equip, train, and direct non-US forces in the conduct of guerrilla warfare.

2. Participate in and/or support evasion and escape operations.

3. Conduct other UW missions, either unilaterally or in conjunction with resistance forces.

4. Train, advise, and assist non-U.S. military or paramilitary forces, to include operational, logistic, and fiscal support.

(*b*) To plan and conduct deep-penetration missions, to include attack of critical strategic targets and collection of intelligence.

(*c*) To infiltrate and exfiltrate specified areas by air, land, or sea.

(*d*) To recover friendly personnel from remote or hostile areas.

(*e*) To survive and operate in remote areas and hostile environments for extended periods of time with minimum external direction and support.

(*f*) To provide planning assistance and training to U.S. and allied forces or agencies in special forces' operational techniques.

(3) *Equipment.* FM 31-21, FM 31-21A, and FM 31-22 contain further details on special forces units. Table 1-62 provides a summary of the airborne special forces group's weapons and missiles, aircraft, ground support materiel, electronics, vehicles, and general equipment by class of supply.

Table 1-62. Summary of Equipment—Airborne Special Forces Group

1		2	3	4	5	6	7	8
LIN		Nomenclature	HHC (31-106G)	4 SF co (31-107G)		Sig co (11-247G)	Avn co (1-307G)	Gp total (31-105G)
				(1)	(4)			
		CLASS 20—GENERAL EQUIPMENT						
1	W98270	TRAILER PLATFORM WAREHOUSE+ 6000 LB CAP 108L X 48W IN PNEUM.	4	0	0	0	0	4
		CLASS 7A—AIR						
2	A30621	AIRPLANE UTILITY+ U-1A	0	0	0	0	4	4
3	A30971	AIRPLANE UTILITY STOL+ U-10A	0	0	0	0	4	4
4	K31767	HELICOPTER UTILITY+ UH-1C	0	0	0	0	4	4
5	K31786	HELICOPTER UTILITY+ UH-1D	0	0	0	0	8	8
		CLASS 7B—GROUND SUPPORT						
6	E67735	COMP RCP PWR DRVN+ BASE AC 115V 60CY 1PH 2.7 CFM 80 PSI.	0	0	0	1	0	1
7	E70064	COMP RCP PWR DRVN+ TRK 2 WHL PNEU TIRES GAS DRVN 5 CFM 175 PSI.	0	0	0	0	1	1
8	J35424	GEN ST DSL ENG TM+ 15KW 60CY 3PH AC 120/208 240/416V PU-402/M.	0	0	0	0	1	1
9	J41178	GENERATOR SET GASOLINE ENGINE TRAILER MTD+ PU 290/MR.	0	0	0	0	4	4
10	J41931	GENERATOR SET GASOLINE TRAILER MTD+ PU-456/G.	0	0	0	0	1	1
11	J42000	GENERATOR SET GASOLINE ENGINE TRAILER MTD+ PU-474/U.	0	0	0	11	0	11

Table 1-62. Summary of Equipment—Airborne Special Forces Group—Continued

1	2		3	4	5	6	7	8
	LIN	Nomenclature	HHC (31-106G)	4 SF co (31-107G)		Sig co (11-247G)	Avn co (1-307G)	Gp total (31-105G)
				(1)	(4)			
12	J42959	GEN ST GAS ENG+ 0.5KW 60CY 1PH AC 120V SHK.	0	0	0	0	1	1
13	J43918	GEN ST GAS ENG+ 1.5KW 60CY 1PH 2 WIRE AC 120V SHOCK.	6	0	0	1	7	14
14	J44055	GEN ST GAS ENG+ 1.5KW DC 28V SHOCK.	0	0	0	0	1	1
15	J45699	GEN ST GAS ENG+ 3KW 60CY 1-3PH 120/240V 120/208V SKID SHOCK.	1	0	0	1	0	2
16	J46178	GEN ST GAS ENG+ 3KW DC 28V WHL MTD.	0	0	0	0	3	3
17	J47068	GEN ST GAS ENG+ 5KW 60CY 1-3PH AC 120/240 120/208V SKD-SHK MTD.	0	1	4	0	0	4
18	P96640	PUMPING ASSEMBLY FLAMMABLE LIQUID BULK TRANSFER+.	0	0	0	0	3	3
19	W89557	TRACTOR WHEELED WAREHOUSE+ GAS 4000 LB.	1	0	0	0	0	1
		CLASS 7G—ELECTRONICS						
20	Q32756	RADIO SET AN/GRC-106	0	0	0	5	3	8
21	Q42092	RADIO SET+ AN/URC-10	0	32	128	0	24	152
22	Q50421	RADIO SET AN/VRC-24	0	0	0	0	1	1
23	Q54154	RADIO SET AN/VRC-47	0	0	0	0	4	4
24	Q90100	RADIO TELETYPEWRITER SET AN/GRC-122.	0	0	0	0	1	1
25	U81707	SWITCHBOARD TELEPHONE MANUAL+ SB-22/PT.	0	0	0	5	1	6
26	V31211	TELEPHONE SET+ TA-312/PT	0	0	0	86	12	98
27	V41968	TELETYPEWRITER SET+ AN/GGC-3.	0	0	0	2	0	2
		CLASS 7K—TACTICAL VEHICLES						
28	K90188	INSTRUMENT REPAIR SHOP TRUCK MOUNTED+ 2-1/2 TON 6×6 W/E.	0	0	0	0	2	2
29	W95400	TRAILER CARGO+ 1/4 TON 2 WHEEL W/E.	6	0	0	6	9	21
30	W95537	TRAILER CARGO+ 3/4 TON 2 WHEEL W/E.	3	0	0	2	6	11
31	W95811	TRAILER CARGO+ 1-1/2 TON 2 WHEEL W/E.	4	0	0	11	7	22
32	W98825	TRAILER TANK+ WATER 400 GALLON 1-1/2 TON 2 WHEEL W/E.	1	0	0	1	2	4
33	X38639	TRUCK AMBULANCE+ 1/4 TON 4×4 W/E.	4	0	0	0	0	4
34	X39735	TRUCK CARGO+ 3/4 TON 4×4 W/E	3	0	0	1	2	6
35	X39872	TRUCK CARGO+ 3/4 TON 4×4 W/WINCH W/E.	0	0	0	1	5	6
36	X40009	TRUCK CARGO+ 2-1/2 TON 6×6 W/E.	9	0	0	26	5	40
37	X40146	TRUCK CARGO+ 2-1/2 TON 6×6 W/WINCH W/E.	1	0	0	3	5	9
38	X57271	TRUCK TANK+ FUEL SERVICING 2-1/2 TON 6×6 W/E.	0	0	0	0	4	4
39	X59189	TRUCK TRACTOR+ 2-1/2 TON 6×6 W/WINCH W/E.	0	0	0	0	1	1

Table 1-62. Summary of Equipment—Airborne Special Forces Group—Continued

1	2	3	4	5	6	7	8
LIN	Nomenclature	HHC (31-106G)	4 SF co (31-107G)		Sig co (11-247G)	Avn co (1-307G)	Gp total (31-105G)
			(1)	(4)			
40 X59326	TRUCK TRACTOR+ 5 TON 6×6 W/E.	0	0	0	0	2	2
41 X59463	TRUCK TRACTOR+ 5 TON 6×6 W/WINCH W/E.	0	0	0	0	2	2
42 X60696	TRUCK TRACTOR WRECKER+ 5 TON 6×6 W/WINCH W/E.	0	0	0	0	1	1
43 X60833	TRUCK UTILITY+ 1/4 TON 4×4 W/E.	6	0	0	6	9	21
44 X63299	TRUCK WRECKER+ 5 TON 6×6 W/WINCH W/E.	1	0	0	0	0	1
	CLASS 7M—WEAPONS						
45 A90117	ARMAMENT SUBSYSTEM HELICOPTER 7.62 MILLIMETER MACHINE GUN+ LIGHT.	0	0	0	0	8	8
46 A90426	ARMAMENT SUBSYS HEL 7.62MM MG 2.75 IN RKT LAUNCHER+ HIGH RATE.	0	0	0	0	4	4
47 L44575	LAUNCHER GRENADE+ 40 MILLIMETER.	0	30	120	0	8	128
48 L92260	MACHINE GUN 7.62 MILLIMETER+ AIRCRAFT LIGHT DOOR MTD.	0	0	0	0	8	8
49 L92386	MACHINE GUN 7.62 MILLIMETER+ LIGHT FLEXIBLE.	0	0	0	0	2	2
50 M75714	MOUNT TRIPOD MACHINE GUN+ 7.62 MILLIMETER.	0	0	0	0	2	2
51 R91244	REVOLVER CALIBER .38+ 4 INCH BARREL.	21	266	1064	4	75	1164
52 R94977	RIFLE 5.56 MILLIMETER+ W/E	0	30	120	0	0	120
53 U56351	SUBMACHINE GUN 5.56 MILLIMETER.	217	189	756	209	114	1296
	CLASS 7Q—GENERAL EQUIPMENT						
54 G32473	DIVING EQUIP SET+ 1 PERSON SCUBA OPEN CIRCUIT.	24	0	0	0	0	24

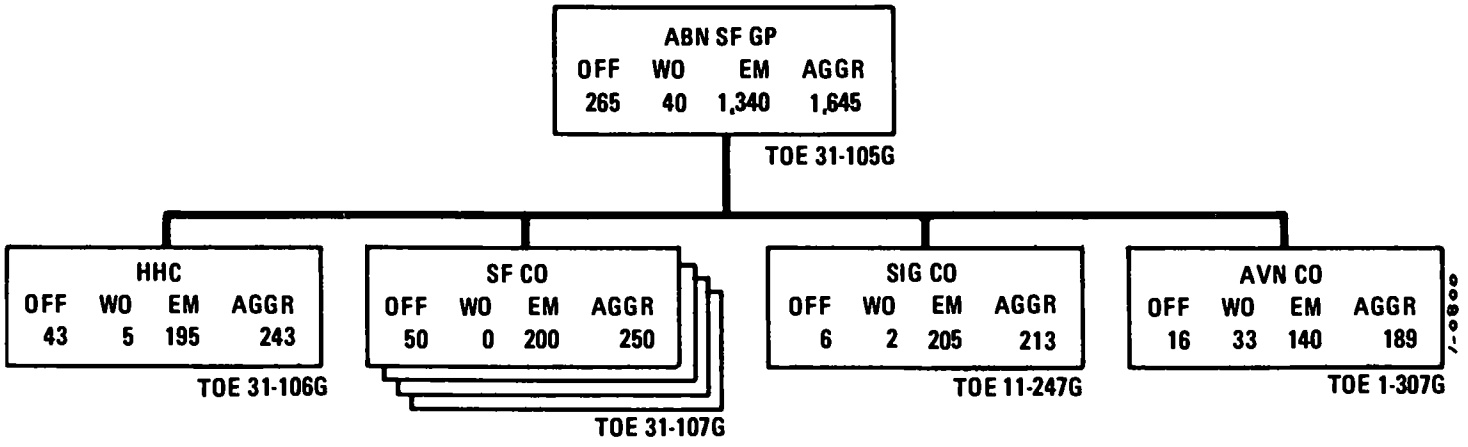

Figure 1–83. Airborne special forces group.

CHAPTER 2
COMBAT AND COMBAT SUPPORT—OPERATIONS, INTELLIGENCE, AND CIVIL-MILITARY OPERATIONS

Note. This chapter is in consonance with NATO and CENTO STANAG 2151 and SEATO SEASTAG 2151, *Route Network—Definitions and Characteristics,* and NATO and CENTO STANAG 2154 and SEATO SEASTAG 2154, *Definitions and Regulations for Military Motor Movements by Road.*

Section I. TROOP PLANNING

2–1. Introduction

a. General. The mission; the character, disposition, and capabilities of the enemy; the characteristics of the area of operations (to include terrain, climate, population, natural resources, and man-made works); the availability of troops or units or both; and the availability of transportation, supplies, and equipment determine the numbers and types of units for employment in a given operation.

b. Basic Steps in Troop Requirement Planning.

(1) The following general steps are essential in accomplishing sound troop requirement planning:

(*a*) Determination of the functions or tasks to be performed.

(*b*) Determination of quantitative workload.

(*c*) Selection of type of operating unit, with capability required.

(*d*) Calculation of number of operating units required.

(*e*) Provision for command and control.

(2) Accomplishment of the steps listed in (1) above requires each member of the staff, in view of his responsibilities and the factors that affect mission accomplishment, to study the overall mission in detail.

c. Planning Procedures. Troop requirement planning passes through three phases—estimation, calculation, and modification. The planner must accomplish the first phase, particularly in the case of the establishment of a new theater with few, if any, tangible figures. He develops each successive phase with more concrete and accurate data than available in the preceding phase until a balanced, sound troop list evolves.

(1) *Phase I planning—estimation.* The planner must accomplish the initial step in the development of troop requirements with little specific data—often he has no more than a brief statement of the overall strength of the force to be employed or the number of divisions around which the force is to be built. Each planner uses broad experience factors, such as division and air wing slices, troop and equipment densities, and replacement and consumption factors. For example, when the total troop strength is unknown, the planner can estimate by using appropriate division and air wing slices. From this figure and from basic vehicle density factors, he can estimate the number of vehicles in the force. The planner derives other data in a similar manner. The margin of error will depend partly on the accuracy of the factors he uses. He should use factors representing the best available experience and refrain from changing factor values unless he has the experience and background to make such changes valid.

(2) *Phase II planning—calculation.*

(*a*) Phase II planning begins when the planner receives phase I estimates in the form of initial, tentative troop lists. He can derive troop strengths and equipment lists for the force from these initial lists. These troop lists should be more accurate than the estimates used to initiate planning in phase I. The margin of error between these initial lists and those finally accepted will depend not only on the adequacy of the planning factors and guidance available to the troop requirement planners, but also on the experience, aptitude, and judgment of the individual planner. At the review level, general staff troop planning officers should carefully examine lists of the arms and services to determine whether the lists

comply with guidance provided in the campaign plan scenario. In cases where branch strength requirements are largely dependent on total force strength, these planners should question any significant deviation from currently accepted percentages. However, environmental conditions, cultural development, and periods of time available for the buildup, to include force deployment and base development, are seldom identical in the different campaign scenarios. Certain types of troop strength requirements are highly sensitive to factors other than total force in the theater. For example, a given campaign plan scenario indicates that peak requirements for logistic support of operations will occur at a particular phase of the campaign, e.g., on initiation of the offensive at D+90 days. Presumably, the airfields; roads; ports; terminals; and storage, maintenance, and other facilities needed to maintain the planned volume of logistic support will require approximately 12 construction battalion (CB)—months to accomplish. If work were to start on D-day, four engineer CB could do the work if they were in the theater. However, if the battalions were scheduled for deployment into the theater at 10-day intervals starting at D+10 days, the task would require eight engineer CB.

(*b*) Each planner reviews the consolidated initial troop list and decides, based on the new information therein, whether his next revision will increase or decrease the force and to what extent. The general staff planning officers should appraise each planner's predictions for accuracy and recalculate the first revised troop list accordingly. The general staff planning officers then furnish this information to all other planners so that each will be aware of the direction and limits of applicable changes.

(*c*) When this information is available, the planners continue phase II planning by preparing revised estimates. They discard the division slice and other factors suitable only for initial estimation in favor of actual (or adjusted) figures extracted from the initial lists. They may make several revisions before they can balance lists with one another. Intelligent adjustment and careful prediction at each successive planning stage reduce the number of revisions necessary to arrive at a calculated, balanced troop list to complete phase II.

(3) *Phase III planning—modification.*

(*a*) The consolidated troop list produced in phase II provides a balanced force, each element of which can perform its mission without modification. The planner then applies the modifications, adaptations, or alterations that policy, command direction, or conditions peculiar to the theater under consideration dictate in phase III.

(*b*) For example. the planner may substitute indigenous labor for military personnel at this stage.

1. The substitution of indigenous labor for military personnel will immediately throw the troop list out of balance, possibly requiring several successive revisions, such as those made in phase II, to balance it. This substitution will affect various services differently, e.g., the impact on maintenance units will be relatively minor because the equipment density will not change significantly; but the impact on the medical troop list will be substantial because medical support is provided primarily on the basis of military strength. Other services will be affected to a greater or lesser extent, depending on the change in military strength and the equipment required.

2. Because substitution of indigenous labor for military personnel in phase III will cause an imbalance and make additional revisions necessary, the planner should consider making such substitutions earlier in the planning process. Earlier substitution will simplify matters for services, such as medical, interested primarily in military strengths; but it will complicate matters for those services that must prepare lists of equipment for the indigenous labor force. The chief of the planning group decides the procedures; but the various combat service support representatives should present the advantages and disadvantages of each method and make an appropriate recommendation in each case. One hundred-percent military troop lists against which planners can make augmentations and comparisons are desirable.

(*c*) Planners frequently impose arbitrary personnel ceilings on the combat service support elements. Planners should not apply these ceilings until phase III because the reduction in strength may not be proportional for all services or for all units within a service. If the planner knows the full military strength required to accomplish a mission, he can adequately appraise the effects of a reduced strength and report them to the head of the planning staff and force commander.

(*d*) The planner makes final distribution of troops by zone or area and determines the location of depots and other major installations in phase III. If the planner has tentatively accomplished

the foregoing for each troop list prepared in phases I and II. he should find the final determination simple because of his increasing awareness of the deployment of troops of other arms and services throughout the theater and his adjustment of his own distribution to meet the probable load.

2-2. Troop Requirements—Type of Field Army

a. General. Tables 1-1 through 1-4 indicate the numbers and types of units that might be found in a dual-capable (capable of fighting in nuclear and nonnuclear environment) type of field army operating under conditions of general war.

b. Organization. This type of field army has three corps composed of one infantry division, one armored division, and two infantry divisions (mechanized) each. Tables of organization and equipment (TOE) shown are either current or approved types that the Department of the Army (DA) has officially designated proposed or tentative. Tables 1-1 through 1-4 illustrate the many and various types of divisional and nondivisional units that a commander may employ in the field and the principles of organization of these units. The tables do *not* attempt to depict an organization for the conduct of operations in a specific situation or to connote in any way that they compose a type of force in the field. Actually, the composition or size of forces in the field army will depend on the assigned missions and the requirements of locale and forms of conflict.

2-3. Troop Requirements—Theater Army Support Command

a. Mission. The theater army support command (TASCOM) provides combat service support to Army forces in a theater of operations and to other forces as designated. Services include—

(1) General support to the field army.

(2) Direct support and general support in the communications zone (COMMZ).

(3) Rear area protection in the COMMZ.

b. Functions. The TASCOM performs combat service support functions, including administration, civil affairs, construction, maintenance, medical, military police, movements, personnel, legal, field services, comptroller and finance, supply, and transportation.

c. Organization. The TASCOM can support the following forces:

(1) U.S. Army elements of joint, unified, or combined headquarters and units.

(2) Theater army headquarters.

(3) Army group headquarters (when used).

(4) One or more field armies consisting of from eight to 12 divisions each.

(5) Theater army air defense command.

(6) Theater army civil affairs command (when used).

(7) Theater army military intelligence (MI) group (when used).

(8) Theater army reserve units.

(9) U.S. Army Strategic Communications Command (theater).

(10) TASCOM units.

(11) U.S. Army Security Agency units.

(12) Other U.S. Army units located in or passing through the COMMZ.

(13) Psychological operations group.

(14) Other U.S. Military Services, U.S. Government agencies, allied military forces, and civilian populations as the theater army commander may designate.

d. Subordinate Commands. The TASCOM normally has the following major subordinate commands:

(1) Area support command.

(2) Engineer command.

(3) Medical command.

(4) Personnel command.

(5) Supply and maintenance command.

(6) Transportation command.

2-4. Troop Requirements—Airborne Operations

a. General.

(1) The mission, characteristics of the objective area, enemy dispositions and capabilities, and probable length of time that the air lines of communications will support the airborne force are among the pertinent factors that determine the troop requirements for an airborne force. The complete dependence of an airborne force on a single communication system—air line of communications—until establishment of linkup requires that the planner carefully determine troop requirements for each airborne operation.

(2) Normally, the troop list for the Army

component of an airborne force includes those units that will participate directly in the operation in a combat or a supporting role. It does not include units required to support the marshaling of the Army forces or the combat service support that the TASCOM agency designated may furnish to mount and support the airborne operation.

(3) The number of airborne divisions and corps allocated to theaters of operations will vary. DA, based on Joint Chiefs of Staff (JCS) directives, furnishes such units.

(4) The Army component of an airborne force usually is responsible for its own combat service support in the airborne objective area, regardless of the size or composition of the Army forces. Therefore, the troop list for the Army component of an airborne force will contain sufficient combat service support troops to provide combat service support in the airborne objective area. In all airborne operations, the planner carefully considers the combat service support that units in the departure area will provide Army forces in the objective area. He will use this information to the maximum permitted by the characteristics of the operation he is planning. Usually, the nature of the service that the units concerned provide will determine their assignment to the Army component of the airborne force or to the TASCOM supporting the operation. Normally, the number of Army combat service support troops required by an airborne force in an objective area will be considerably less than the number required by a ground force containing the same number of divisions.

b. Employment of TOE Units. The same types of nondivisional combat service support troops shown for the type of field army in chapter 1 will support airborne divisions, infantry divisions, corps, and field armies used in airborne operations. The number of supporting units will be the minimum to provide only the requirements of the specific force being organized. Frequently, the strength and organic equipment of a supporting unit are reduced to improve its air transportability. Lighter equipment may replace heavy equipment. Because of the inherent differences between ground and airborne operations, many of the support units shown in chapter 1 may be omitted from the airborne troop list, while others may be assigned to the TASCOM troops supporting the airborne operation. A portion of those units assigned to the Army component of the airborne force may operate in the objective area, while other units support the operation in the departure area.

c. Employment of Special Units. Special units or TOE units with special training and equipment are required for certain airborne operations, particularly independent operations.

(1) Specifically structured, trained, and equipped engineer units organized primarily around the engineer light equipment company and the engineer combat battalion (army) are required to rehabilitate airfields or to construct air-landing facilities.

(2) Specially organized. trained, and equipped units provide air terminal facilities in the objective area when aircraft will deliver large tonnages of supplies and equipment for a prolonged period. Normally, U.S. Air Force (USAF) units will provide this terminal support. Army units, however, must clear the supplies from the terminal.

(3) The planner determines separately the numbers and types of the special units required for each airborne operation, based on such factors as the airfield repair and construction requirements in the objective area, the tonnage of supplies and equipment to be received in the objective area by air transportation, and the method of supply distribution that will be used on the objective area.

2-5. Troop Requirements—Airmobile Operations

a. General.

(1) The Army conducts airmobile operations in two ways: first, it allocates aircraft to ground units for specific missions or periods of time; and second, it organizes, equips. and trains units that employ aircraft as the primary means of accomplishing their ground tactical mission, such as the airmobile division. In either instance, the planner preparing a troop list for airmobile forces must be aware of the greatly increased logistic requirement needed to support this type of operation.

(2) Generally, the airmobile force troop list includes only those units that directly and habitually participate in airmobile operations. Other units, such as aircraft maintenance and petroleum supply units, should be provided in the troop list for the appropriate TASCOM agency.

(3) The airmobile force is responsible for its own combat service support in the objective area. Before linkup, combat service support is sustained

through an air line of communications. This support may require attachment of additional combat service support units for employment in the objective area. This requirement is particularly applicable in the case of ground combat units employing attached aviation units to provide airmobility.

(4) The density of airmobile forces varies between theaters of operations. The theater commander recommends assignment of airmobile forces to the JCS, and DA furnishes such forces based on JCS directives.

b. Employment of TOE Combat Support and Combat Service Support Units.

(1) Airmobile forces require the same types of combat support and combat service support as other forces in a type of field army, except that in the areas of aircraft maintenance, aviation POL, and aircraft armament ammunition, the requirements are greatly increased. Units providing this support may require modification in personnel structure or equipment authorization to improve their airmobility. Some units may operate in the objective area while others will operate in the departure area, forward supply bases, and forward refueling and rearming areas. Combat service support units provided in the TASCOM troop list will normally operate from a location in the theater COMMZ.

(2) The planner must determine the number and type of each combat support or combat service support unit required for each separate airmobile operation. He considers preparation of airfields, staging areas, forward supply, refueling and rearming areas, and landing zones in the objective area; the tonnages of supplies to be moved to these areas; and possibly the use of USAF air transportation.

2–6. Troop Requirements—Amphibious Operations

a. Table 1–60 assists in determining types of shore party troop units in addition to those units normally attached to an independent corps of two assault divisions landing abreast (colm 5), an independent division landing force of two assault brigades landing abreast with one brigade following (colm 4), and a brigade landing team (BDELT) (colm 3) to provide balanced shore parties for amphibious operations. The factors used as a basis to determine the troop requirements can provide only an estimate. The planner must modify requirements to meet the peculiarities of a particular situation.

b. FM 5–144 contains details on shore party organization and planning.

2–7. Troop Planning Slices

a. Purpose. In administrative planning, a preliminary estimate of the total size of a force is required to determine the final composition and the ultimate size of the force. The required number of combat service support units, such as hospitals, depot units, bears a direct relationship to the size of the total force. Two factors are used in planning for a large landmass army—the division slice and the air wing slice. To determine the preliminary total of the force, the planner—

(1) Multiplies the division slice by the number of divisions in the force.

(2) Adds the product to that of the air wing slice multiplied by the number of air wings in the force.

(3) Adds to this sum the various miscellaneous forces not included in either slice.

b. Definitions.

(1) *Division slice*—The strength of an average combat division plus proportionate shares of the total corps, field army, COMMZ, and continental United States (CONUS) (for worldwide slice only) units operating to the rear of the division (and of Navy units directly supporting the Marines in case of Marine divisions). The division slice for any given force is equal to the total strength of the force divided by the number of combat divisions in the force.

(2) *Air wing slice*—The strength of an average air wing plus a proportionate share of the USAF and Army units engaged in developing or operating the airbases (and of Navy units that directly support the Marine or Navy air units).

(3) *Brigade slice*—The strength of an average separate brigade plus proportionate shares of the total combat support and combat service support units operating in the corps or other operational area.

c. Relationship Between Division Slice and Air Wing Slice. The 7,000-man air wing slice (fig 2–2) includes about 1,000 Army COMMZ men not counted in a division slice. These 1,000 Army men are required for COMMZ support of USAF units and installations present in the theater of operations. From the information in *a* and *b* above and figures 2–1 and 2–2, the planner makes this same assumption—the air wing slice, not the division

slice, contains the COMMZ support for the USAF. This allows troop planners to use the data in the figures below with varying ratios of air wings to Army divisions in any specific force.

Note. Strength for the average combat division in figure 2–1 and tables 2–1 and 2–2 below is based on "G" series TOE. Troop planning data for the armored, infantry, and infantry (mechanized) division based on the "H" series TOE were not available at the time of preparation of this manual.

2–8. Division and Air Wing Slices

a. Basic Slice Factors. Table 2–1 shows the location and assignment of slice components, whereas figures 2–1 and 2–2 show the assignment of slice components only. The location and assignment factors are repeated in figure 5–1.

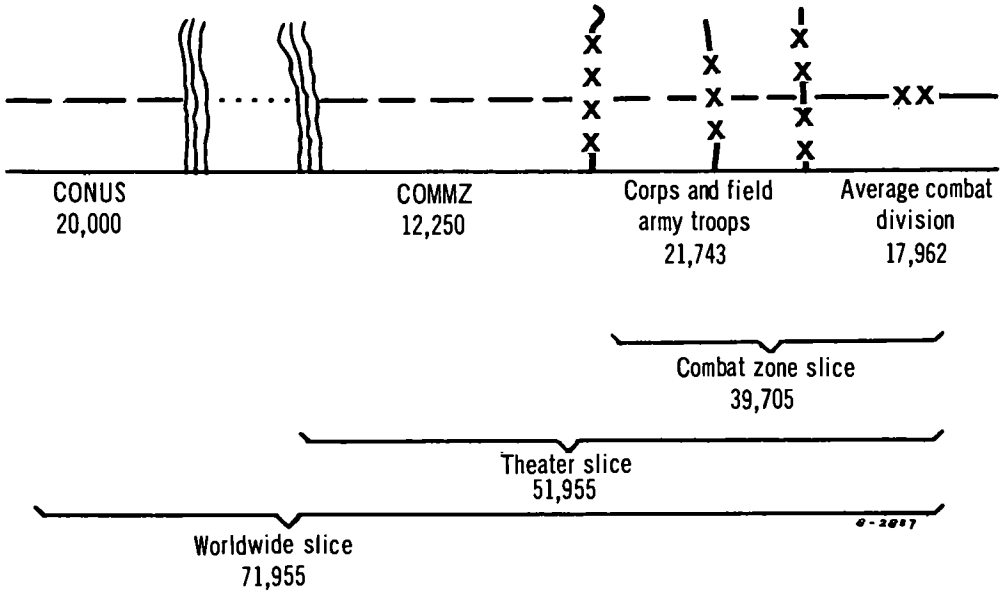

Figure 2–1. Division slice.

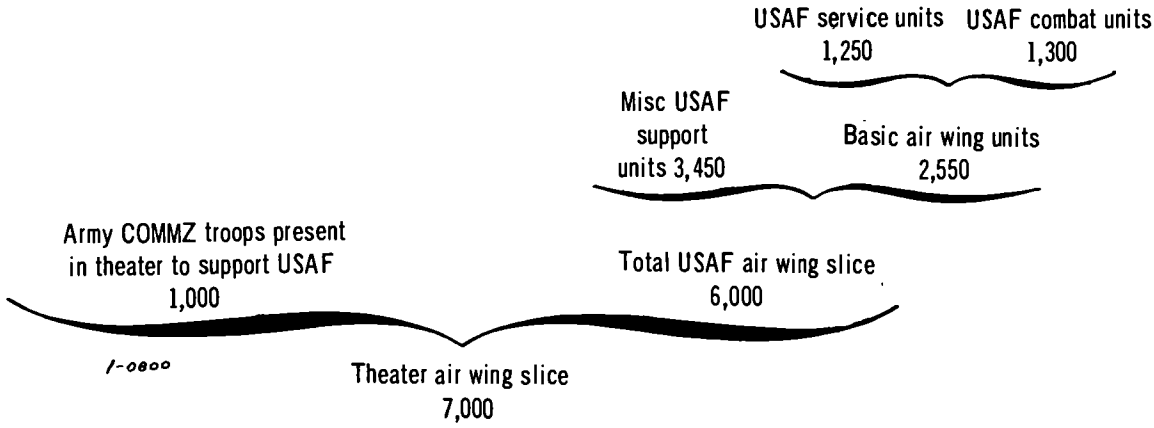

Figure 2–2. Air wing slice.

Table 2-1. Basic Slice Factors
a. Division Slice

	1	2	3	4	5	6
	Composition of slice by assignment of troops		Percentage of slice		Composition of slice by location of troops	
1	Assignment	Troops	Theater	Combat zone	Troops	Location
2	Basic division	17,962	34	45	24,265	Division area.
3	Corps and field army troops	21,743	42	55	15,440	Corps and field army rear areas.
4	Communications zone and theater overhead	12,250	24	----	12,250	Communications zone.
5	Total	51,955	100	100	51,955	

b. Air Wing Slice

	1	2	3	4	5
1	Composition of slice by assignment of troops		Percentage of slice	Composition of slice by location of troops	
2	USAF combat organization	2,550	36	----	Division area.
3	Miscellaneous USAF support units	3,450	50	----	Corps and field army rear areas.
4	Army communications zone troops*	1,000	14	7,000	Communications zone.
5	Total	7,000	100	7,000	

*Army troops required in the theater because of the presence of USAF elements, which are provided Army combat service support.

b. Division Slice. Table 2-2 presents the percentages of each arm, service, and other major grouping assigned to each part of a large balanced force. Its basis is the logical breakout of the combat support and combat service support units necessary to support a type of 12-division field army. The strengths shown are based on those for field army units presented in tables 1-1 through 1-4, except as noted in paragraph 2-7*c* above. The COMMZ percentages (colm 5) do not include those Army COMMZ troops that must be present to support the USAF (para 2-7*c*). Percentages in the CONUS portion of the worldwide slice (colm 3) are those from previous editions of this manual.

c. Air Wing Slice. Table 2-3 presents the percentages of components, branches, and other major groupings present in the theater of operations. Its basis is a type of USAF troop list and a type of Army force.

Table 2-2. Division Slice—Major Grouping

	1	2	3	4	5	6	7	8
		Worldwide slice (percentage)		Theater slice (Army) (percentage)		Combat zone slice (Army) (percentage)		
1	Branch or other major groupings	Total (71,955 men)	CONUS portion (20,000 men)	Total (51,955 men)	COMMZ portion (12,250 men)	Total (39,705 men)	Corps fld army and rear portion (21,743 men)	Average cbt div only (17,962 men)
2	Cbt div	25.0	0.0	34.6	0.0	45.2	0.0	100.0
3	HQ, thtr, fld army, corps, TASCOM, FASCOM, spt bde, spt gp	3.8	9.5	1.7	4.5	0.8	1.4	0.0
4	Sep bde	0.7	----	1.0	----	1.3	2.4	0.0
5	Inf	0.8	0.4	1.0	----	1.2	2.3	0.0
6	Armor	2.1	0.3	2.8	----	3.7	6.7	0.0
7	Arty	7.1	1.6	9.2	----	12.1	22.1	0.0

Table 2-2. Division Slice—Major Grouping—Continued

1	1 Branch or other major groupings	2 Worldwide slice (percentage) Total (71,955 men)	3 Worldwide slice (percentage) CONUS portion (20,000 men)	4 Theater slice (Army) (percentage) Total (51,955 men)	5 Theater slice (Army) (percentage) COMMZ portion (12,250 men)	6 Combat zone slice (Army) (percentage) Total (39,705 men)	7 Combat zone slice (Army) (percentage) Corps fld army and rear portion (21,743 men)	8 Average cbt div only (17,962 men)
8	Avn (cbt spt)	0.5	--------	0.7	--------	0.8	1.5	0.0
9	Cml	0.4	0.2	0.5	0.3	0.6	1.0	0.0
10	Engr	8.5	4.0	10.2	14.3	8.9	16.2	0.0
11	Other cbt spt	2.9	1.7	3.3	0.9	4.0	7.4	0.0
12	Ammo	1.5	0.4	1.9	3.5	1.4	2.6	0.0
13	Maint	5.1	1.4	6.5	7.9	6.0	10.9	0.0
14	Med	6.2	4.9	6.8	17.6	3.4	6.2	0.0
15	MP	2.5	0.9	3.2	9.8	1.0	1.8	0.0
16	S&S	5.7	2.6	6.8	14.8	4.3	8.0	0.0
17	Trans	6.2	5.0	6.7	16.3	3.7	6.7	0.0
18	Pers svc	1.2	--------	1.5	3.6	0.9	1.6	0.0
19	Other cbt svc spt	1.1	--------	1.6	6.5	0.7	1.2	0.0
20	Repl (CONUS)	6.4	23.0	0.0	0.0	0.0	0.0	0.0
21	Other CONUS	12.3	44.1	0.0	0.0	0.0	0.0	0.0
22	Total percentage	100.0	100.0	100.0	100.0	100.0	100.0	100.0
23	Percentage of worldwide slice	100.0	27.8	72.2	17.0	55.2	30.2	25.0
24	Percentage of thtr slice			100.0	23.6	76.4	41.8	34.6
25	Percentage of CZ slice					100.0	54.8	45.2

Table 2-3. Air Wing Slice—Major Groupings

1	1 Component, branch, or other major grouping	2 Theater total—7,000 men (percentage)	3 USAF total—6,000 men (percentage)	4 Basic air wing 2,550 men—(1,300 cbt) (1,250 svc)[1] (percentage)
	USAF:			
2	HQ and overhead [2]	(3.0)	(3.3)	----------
3	Cbt	18.6	21.7	51.0
4	Svc	17.9	20.8	49.0
5	Misc spt	49.2	57.5	----------
	Army:			
6	COMMZ spt	14.3	----------	
7	Total percentage	100.0	100.0	100.0
8	Percentage of air wing slice	100.0	85.7	36.4

[1] Located on the cbt airfield; includes all elements organic to wing.
[2] Includes various USAF headquarters and misc overhead units. Percentages in parentheses are included in total percentages of misc spt, line 5.

Section II. TACTICAL TROOP MOVEMENTS

2-9. Road Movement

a. Tactical Troop Movements. Tactical troop movements by land, air, and water, including foot and motor movements, are covered in this section. Administrative troop movements are covered in chapter 6.

b. Examples. The examples of forms for movement tables and graphs in this section are guides for preparing similar tables for units in the field. Tables for field use must conform to the variations in strengths of units and the amount of transportation and equipment available. Brigades, separate battalions, and similar units should maintain tables showing length-of-column (LGTHCOLM) requirements of their units, based on actual strength and materiel on hand. Reports of subordinate units form the bases for tables of

larger units. Brigade headquarters maintains tables of attached units. However, a table based on actual strength of men and materiel may be useless without proper evaluation of the weather, road aspects, nuclear aspects, hostile air and mechanized threats, or other factors affecting the troop movement. These basic figures can be increased or decreased under extremes of the variable factors. In considering movement data under nuclear conditions, the planner should evaluate the relatively unprofitable target presented by a narrow, long column and the possibly high vulnerability of several columns along parallel routes at the same time. The mission of the unit, the time available, and the degree of acceptable risk are factors that will govern the manner of movement. Troop movement data in the examples of tables of basic LGTHCOLM and tables of rates and lengths of marches are averages from field experience.

c. Basic LGTHCOLM. The following values apply in computing LGTHCOLM, except when greater dispersion is desired to reduce the effect of unfavorable factors, such as those mentioned in *b* above.

(1) Foot troops (at halt or marching):

	Interval	
	2 meters per man	*5 meters per man*
Single file, per man	2.4	5.4
Column of twos, per man	1.2	2.7

(2) Motor elements (at halt):

	Length of vehicle (meters)
Car, passenger	7
Armored personnel carrier	6
Tank	10
Tank with cargo carrier or weapon in tow	13
Tractor	7
Tractor with cargo trailer or weapon in tow	14
Tractor, 5-ton, with semitrailer, 15-ton, low-bed.	28
Tractor, 10-ton, with semitrailer, tank transporter, 50-ton.	28
Trucks:	
¼-ton	4
¼-ton with cargo trailer or weapon in tow.	8
¾-ton	6
¾-ton with cargo trailer or weapon in tow.	9
2½-ton	8
2½-ton with cargo trailer or weapon in tow.	15
More than 2½-ton	9
More than 2½-ton with cargo trailer in tow.	15
10-ton with 8-inch howitzer	21
5-ton with 155-mm howitzer	15
Pershing, XM656, cargo truck	8
Pershing, XM 757, tractor	14
5-ton tractor with Sergeant, XM504	17
Average per vehicle for a mixed column of various types.	10

(3) Use of values.

(*a*) A dismounted battalion of 800 men organized as four companies, totaling 19 platoons; company—100 meters; platoon distances—50 meters; formation—column of twos, 5 meters between men:

$$\text{LGTHCOLM} = 800 \times 2.7 + 100 + 15 \times 50 = 3{,}210 \text{ meters}$$

(*b*) A mixed motor column consisting of—

	(Meters)
20 trucks, ¼-ton, with weapons in tow at 8 meters each.	160
25 trucks, ¾-ton, with trailers in tow at 9 meters each.	225
40 trucks, 2½-ton, with trailers in tow at 15 meters each.	600
40 tanks at 10 meters each	400
Total LGTHCOLM at halt	1,385
Alternate solution ((2) above):	
125 vehicles (mixed) at 10 meters each	1,250

d. Halts (Motor March).

(1) *Short halts.*

(*a*) The commander controlling road movement over the route in question decides whether to observe routine short halts.

(*b*) A 15-minute halt normally is made at the end of the first hour. Thereafter, a 10-minute halt normally is made after each 110 minutes' runing time.

(2) *Long halts.*

(*a*) One-half to 1 hour is allowed for mess and refueling stops. When other convoys must pass, the planner should schedule a mess and refueling halt to coincide with the passing, thus using the necessary delay to advantage.

(*b*) Long halts must be specifically authorized and plotted on movement graphs.

(*c*) FM 55–30 gives detailed information on operational road movement orders, tables, and graphs.

e. Pass Times. Figure 2–3 shows pass times (PST) of columns on foot, column of twos, 5 meters per man; it does not include column gaps (COLMGP).

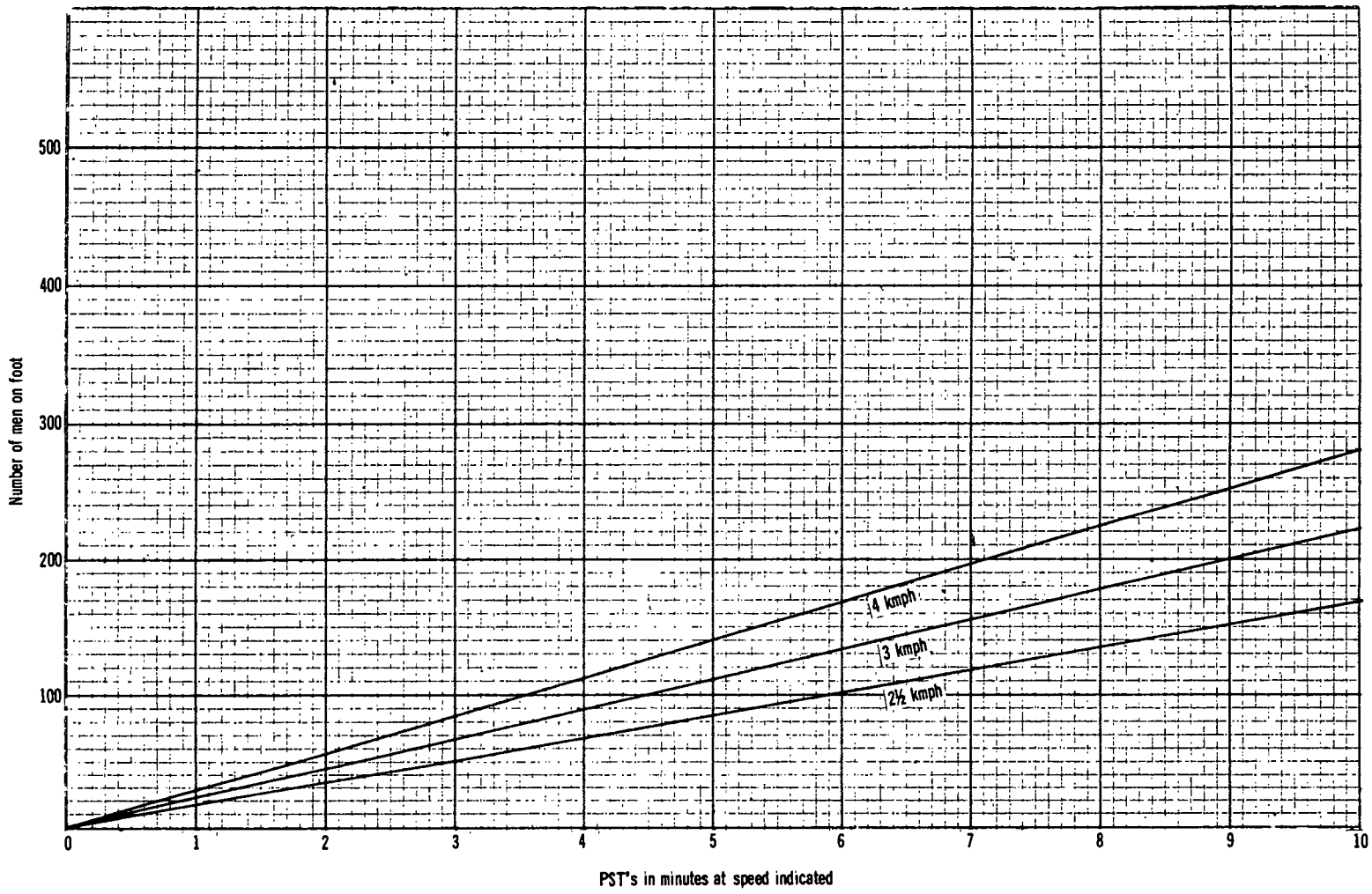

Figure 2-3. PST of columns on foot—column of twos, 5 meters per man (does not include COLMGP).

f. Rates and Lengths of Road Movements, Foot and Motor Elements.

(1) *General.* The rates and lengths of marches in table 2-4 are based on modern vehicles, trained personnel, and favorable road and weather conditions. Hence, rates of march for motorized elements in columns 2 and 3 are possible only on improved roads. The rate of march of a column of elements with different rates of march is regulated by that of the slowest element. The rate of march represents the average speed over a period, including short, periodic halts. However, under forced-march conditions, troops can cover greater distances than those given in column 6. For movements on foot over mountainous terrain, planners should allow an additional hour for each 300 meters of climb.

(2) *Road movements in snow and extreme cold.*

(*a*) *Foot.* Foot troops marching in snow without snowshoes or skis have decreased mobility. This decrease depends on several factors, among which are depth and nature of the snow. Normally, snow of a depth of 64 centimeters or more will prohibit marching unless troops wear skis or snowshoes. For specially trained troops, the following rates of march are practicable:

Snowshoes ---------- 2½ to 4 kilometers per hour
Skis ---------- 2½ to 5½ kilometers per hour

Table 2-4. Rates and Lengths of Road Movements, Foot and Motor Elements

1	1 Unit	2 Rates of march (kmph) On roads Day	3 Rates of march (kmph) On roads Night	4 Rates of march (kmph) Cross country Day	5 Rates of march (kmph) Cross country Night	6 Lengths of march on roads (km per day (avg))	7 Remarks
	Inf						
2	Ft trps	4	3	2½	1½	19-24 for a div; 24-32 for smaller units.	Length of march increased with well-seasoned trps marching on good roads in favorable wea when required by the tac sit.
	Arty						
3	Trkdr, lt or mdm	40	40 (lights) 16 (no lights).	12	8	320	Avg rate 8 kmph.
4	Trkdr, hv	29	29 (lights) 16 (no lights).	10	6	232	Avg rate 8 kmph.
5	Tracdr, hv	24	24 (lights)	10	6 (lights) 1½ (no lights).	192	Avg rate 8 kmph.
6	ADA, msl	32	32 (lights) 16 (no lights).	8	3	256	Avg rate 8 kmph.
7	ADA, SP	32	32 (lights) 16 (no lights).	19	8	256	Avg rate 8 kmph.
	Armor						
8	Tks, lt, and armd carr	32	32 (lights) 16 (no lights).	24	8	256	Armd div moves at rate of march of MBT's. Avg rate 8 kmph.
	Armor						
9	Tks, main bat	28	24 (lights)	16	4½	224	Avg rate 8 kmph.
	Misc						
10	Inf div, motorized	24	24 (lights) 16 (no lights).			192	Avg rate 8 kmph.
11	Trks and ambs not carrying pnts	40	40 (lights) 16 (no lights).			320	Single veh or small colms of less than 50 veh. Avg rate 8 kmph.
12	Ambs carrying pnts	24	16 (lights)	8	8	190	Avg rate 8 kmph.
13	Cars, pax	55	55 (lights) 16 (no lights).			440	Avg rate 8 kmph.

Small bodies of well-trained troops can move 64 kilometers a day on skis under favorable conditions.

(*b*) *Motor movement (wheeled) in snow.*

Depth of snow (cm)	*Measures required for movement*
7.5	None
15	Rear chains
15–45	Chains all around and special traction devices on leading vehicles (to break the trail).
45 and more	Snowplow required

g. Forced Marches of Foot Elements. For planning purposes. a normal foot march covers 32 kilometers per day at a rate of 4 kilometers per hour. A forced march requires more than the normal effort in speed, exertion, hours marched, or a combination of these. Forced marches normally are accomplished by increasing the number of hours marched rather than by increasing the rate of march. Commanders should take full advantage of those periods when the troops are most rested to increase the rate of march. Commanders should schedule rest periods so that troops will not be marching during the hottest time of the day and so that they will arrive in effective fighting condition.

2–10. Motor Movement

a. Definitions.

(1) *Traffic flow of motor columns*—Traffic flow is the total number of vehicles passing a given point in a given time. Traffic flow is expressed in vehicles per hour. The following formula will help to determine the traffic flow for any route:

Traffic flow in vehicles per hour = density in vehicles per kilometer × speed in kilometers per hour × F

F (a variable) depends on the standing operating procedure (SOP) time gaps between march units and serials applicable in the area and on the overall state of proficiency of units operating in the area in motor movement and traffic control. For adaptation to a specific area under field conditions, planners must make continuous time and space studies to arrive at a suitable factor. This study may result in a basic factor to which the planner must add allowance for a time gap between march units and serials, or a basic factor including allowance for a time gap between march units and serials.

(2) *Density of motor columns.*

(*a*) Traffic density is the average number of vehicles per kilometer or mile of road expressed in vehicles per kilometer or vehicles per mile. Motor columns may be either close column, open column, or infiltration.

1. Close column. In close column, vehicles are closed to safe driving distance behind the preceding vehicle. Usually, a fixed speedometer multiplier (SM)* is specified (such as 2, 3, 4, etc.) to accomplish a safe driving intervehicular distance at all speeds.

2. Open column. In open column, distances between vehicles are increased to accomplish greater dispersion. Usually, a fixed distance (such as 90 or 180 meters between vehicles) is specified, but open column conditions may be obtained by designating a fixed SM high enough to insure the desired intervehicular gap at the lowest speed expected.

3. Infiltration. In infiltration, vehicles are dispatched at irregular intervals with a fixed density (such as 3, 4, 5, or 6 vehicles per kilometer).

(*b*) To determine the density of a motor column, when the speed, SM, and vehicle length (VL) are known, the following formula applies:

$$\text{Density} = \frac{1{,}000 \text{ (m per km)}}{\text{speed (kmph)} \times \text{SM} + \text{VL}}$$

Example. With a speed of 15 kilometers per hour, an SM of 2, and a VL of 10 meters, vehicle density equals—

$$\frac{1{,}000}{15 \times 2 + 10} = 25 \text{ vehicles per kilometer}$$

(3) *LGTHCOLM.*

(*a*) LGTHCOLM is the length, expressed in units, of a column on the road. LGTHCOLM is the sum of the lengths of the vehicles, the distance between vehicles. and the distance between march elements.

(*b*) The number of motor vehicles in the column (disregarding trailers and towed weapons), the average density (number of vehicles per kilometer), and the total time gaps between subordinate units determine the LGTHCOLM occupied by a motor column.

---

* For logistic purposes, SM is any number by which speed in kilometers or miles per hour is multiplied to determine the gap between successive vehicles in meters.
Examples: With an SM of 2, the gap between vehicles at a speed of 15 kilometers per hour is 2× 15 = 30 meters; at a speed of 40 kilometers per hour, it is 2 × 40 = 80 meters.

$$\text{LGTHCOLM} = \frac{\text{number of motor vehicles}}{\text{density (vehicles per km)}} + \frac{\text{time gaps} \times \text{speed (kmph)}}{60}$$

The following can determine an approximation of LGTHCOLM:

LGTHCOLM (km) = number of vehicles ÷ 75 (less than 25 vehicles in close column).
= number of vehicles ÷ 30 (25 or more vehicles in close column).
= number of vehicles ÷ 20 (less than 25 vehicles in open column).
= number of vehicles ÷ 15 (25 or more vehicles in open column).
= number of vehicles ÷ 3 (any number of vehicles marching by infiltration).

In close column, a 15-minute time gap occupies 4 kilometers' LGTHCOLM; in open column, a 15-minute time gap occupies 6 kilometers' LGTHCOLM.

(4) *PST.* The PST of a column is the time required for the column to pass a given point. The PST may be determined by the following formula:

$$\text{PST (min)} = \frac{\text{LGTHCOLM (km)} \times 60}{\text{speed (kmph)}}$$

The following can determine an approximation of PST:

PST (min) = number of vehicles × 0.08 (less than 25 vehicles in close column).
= number of vehicles × 0.18 (25 or more vehicles in close column).
= number of vehicles × 0.20 (less than 25 vehicles in open column).
= number of vehicles × 0.30 (25 or more vehicles in open column).
= number of vehicles × 1.33 (any number of vehicles marching by infiltration).

Add 1 minute per 25 vehicles to the PST of each serial.

(5) *Time distance.* Time distance (TDIS) is the time required for any one individual or vehicle to travel between two given points. The following formula can determine TDIS:

$$\text{TDIS} = \frac{\text{distance}}{\text{rate of march}}$$

(6) *Road and time gap.*

(*a*) Road gap is the distance between march elements. The road gap between march elements is more significant when the column is moving than when the column is halted; therefore, it is generally a factor of time rather than distance ((*b*) below). The following formula can determine the road gaps:

$$\text{Road gap} = \frac{\text{time gap (min)} \times \text{rate (kmph)}}{60}$$

(*b*) Time gap may be the conversion of road gap to time. There are no prescribed standard gaps. These depend on the size of serials and march units, the time available for the movement and the tactics required for protection against air and nuclear attack. All types of divisions, when moving by motor in a tactical march, may move in up to six march columns—one serial per brigade, one serial for division artillery, one serial for division troops, and one serial for the division support command (DISCOM). These march columns subdivide into battalion serials and march units of company, troop, or battery size. Examples of time gaps between these march elements are as follows:

Between march columns (brigades, division artillery, division troops, and DISCOM)—15 minutes.
Between serials (battalion)—5 minutes.
Between march units—2 minutes. (See FM 61-100.)

b. Vehicle Capacities for Personnel. The capacity of motor vehicles to transport foot troops depends on the rated capacity of the transportation employed, the type of body on the vehicles, the method of carrying personnel, and the distance personnel are to move. Normal capacities for trucks carrying personnel with hand-carried weapons, packs, and extra ammunition, with no additional cargo and excluding driver, are—

	Men
Armored personnel carrier	11
Truck, ¼-ton	3
Truck, ¾-ton	9
Truck, 1¼-ton	10
Truck, 2½-ton	20
Truck, 5-ton	20
Semitrailer, 12-ton	50

Note. When 2½-ton engineer dump trucks carry the loads shown above, some personnel will have to stand; 12-ton semitrailers should haul troops only in emergencies.

The format in table 2–5 can be used to assist in tabulating the approximate number of trucks required to move foot elements with individual equipment.

Table 2–5. Tabulating Truck Requirements

	1	2	3	4	5
1	Unit	Actual Strength	Transported in organic motors	Strengths that require transportation	Number of 2½-ton trucks required
2					
3					
4					
5					
6					
7					
8					
9					
10					
11					
12					
13					
14					
15					

2–11. Planning Motor Movements

a. Aids Used in Planning. The detailed work of planning troop movements can be simplified by preparing, in advance, tables, graphs, and other aids based on statistical data and experience factors of the unit. The most important of these aids are—

(1) Tables of simplified formulas for LGTHCOLM and PST.

(2) Tables of precalculated LGTHCOLM and PST.

(3) LGTHCOLM and PST nomographs.

(4) Unit table of LGTHCOLM and PST.

(5) Tables of TDIS.

(6) Tables of average time factors.

(7) Road movement graphs.

(8) Road movement tables.

(9) Strip map.

(10) Vehicle availability tables.

(11) March calculators.

b. Table of Simplified Formulas for LGTHCOLM and PST.

(1) *General.* Table 2–6 provides an example of tables of simplified formulas for LGTHCOLM and PST. The table allows a time gap of 2 minutes between company march units (2 minutes per 25 vehicles) and builds them into the formulas. It does not include time gaps between serials. A planner can easily construct similar tables for other units; he must keep in mind the number of time gaps to be built into the formula.

(2) *Application of simplified formulas.*

(*a*) Forty-eight vehicles per kilometer is the density employed when marching in *close column* formation; therefore, each vehicle in a continuous march element occupies a LGTHCOLM of 0.0208 kilometer. The company-size march unit (averaging 25 vehicles or less) is assumed to be the continuous march element. This vehicular LGTHCOLM, when multiplied by the total number of vehicles (25 or less) in the column, gives the value for the LGTHCOLM:

LGTHCOLM for one vehicle (V) = 0.0208 or $\frac{V}{48}$ km.

The LGTHCOLM for one vehicle can be converted to PST, using the equation

$$PST = \frac{LGTHCOLM}{\text{rate of march}} \text{ as follows:}$$

$$PST = \frac{0.0208}{16} \times 60 \text{ (to convert to min)} =$$

0.0788 = 0.08 minute

The constant 0.08, when multiplied by the total number of vehicles (25 or less) in the column, computes the PST of the column (PST + 0.08V min).

(*b*) If a *close column* serial consists of more than 25 vehicles, the time gaps between subordinate march units must be considered in the calculations. This is done by converting this time gap, 2 minutes per 25 vehicles, to 0.10 minute per vehicle and adding this value to the constant 0.08

Table 2-6. Example of Tables of Simplified Formulas for LGTHCOLM and PST

1	1 Column formation	2 Rate (kmph)	3 Density (veh per km)	4 Number of serials	5 Number of vehicles in serial	6 LGTHCOLM (km)	7 PST (min)
2	Close column	16	48	One	25 or less	0.0208V	0.08V
					More than 25	0.048V	0.18V
				Two or more	25 or less	0.0208V +4.0	0.08V/15TG
					More than 25	0.048V +4.0	0.18V/15TG
3	Open column	24	12	One	25 or less	0.08V	0.2V
					More than 25	0.12V	0.3V
				Two or more	25 or less	0.08V +6.0	0.2V/15TG
					More than 25	0.12V +6.0	0.3V/15TG
4	Infiltration	24	2	NA	Any number	0.5V	1.25V

Note. V is number of vehicles; TG is number of intervals between serials of brigade size.

(PST + 0.18V min). This value of PST can be converted to LGTHCOLM as follows:

$$\text{PST} = \frac{\text{LGTHCOLM}}{\text{rate of march}}$$

$$\text{LGTHCOLM} = \text{PST} \times \text{rate of march}$$

$$\text{LGTHCOLM} = 0.18\text{V} \times \frac{16}{60} = 0.048\text{V}$$

(*c*) Twelve vehicles per kilometer is the density employed when marching in *open column* formation; therefore, each vehicle occupies a space of 0.08 kilometer. For a continuous element, then—

LGTHCOLM for one vehicle = 0.08 or $\frac{\text{V}}{12}$ km

The LGTHCOLM for one vehicle can be converted to PST as follows:

$$\text{PST} = \frac{0.08}{24} \times 60 \text{ (to convert to min)} = 0.2 \text{ minute}$$

The constant 0.2, when multiplied by the total number of vehicles (25 or less), computes the PST of the column (PST = 0.2V min).

(*d*) If an *open column* serial consists of more than 25 vehicles, the time gap between subordinate march units, 0.10 minute per vehicle, must again be considered. Thus—

PST = 0.3V minute

This value of PST can be converted as in (*b*) above.

(*e*) Whenever a column (*open* or *close*) consists of two or more march serials of brigade size, the 15-minute time gap between these serials must be considered in calculations.

Example:
PST = 0.18V min
Rate of march (R) = 16 kmph
Time (T) = 60 min
Time gap (TG) = 15 min
Close column

$$\text{LGTHCOLM} = \text{PST} \times \frac{\text{R}}{\text{T}} + \frac{\text{TG} \times \text{R}}{\text{T}} = 0.18\text{V} \times \frac{16}{60} + \frac{15 \times 16}{60} = (0.048\text{V} + 4.0) \text{ km}$$

(*f*) Two vehicles per kilometer is the density employed when marching by *infiltration*; therefore, each vehicle occupies a LGTHCOLM of 0.5 kilometer. This LGTHCOLM, when multiplied by the total number of vehicles, gives the LGTHCOLM:

$$\text{LGTHCOLM} = 0.5\text{V or } \frac{\text{V}}{2} \text{ km}$$

The LGTHCOLM can be converted to PST as follows:

$$\text{PST} = \frac{0.5}{24} \times 60 = 1.25 \text{ minutes}$$

c. Table of Precalculated LGTHCOLM and PST.

(1) *General.* Table 2–7 provides an example of a table of precalulated LGTHCOLM and PST, based on simplified formulas (*b*(2) above).

(2) *Illustration of use.*

(*a*) *Problem.* Determine the PST of two infantry brigades, one with four battalions consisting of 500 vehicles and the other with three battalions of 350 vehicles, moving as one march column in close column formation.

(*b*) *Solution.* Add the following from *b*, table 2–7:

PST for 800 (500 + 300) vehicles = 144.00 minutes
PST for 50 vehicles = 9.00 minutes
Time gap = 40 minutes (15.00 minutes between brigades and 5.00 minutes between battalion-size serials)
PST = 193.00 minutes for 850 vehicles

Note. Time gaps of 2 minutes between company-size march units have been allotted for and built into the values in the table.

d. LGTHCOLM and PST Nomograph.

(1) The nomograph in figure 2–4 shows average LGTHCOLM and PST under ideal conditions and does *not* include allowance for time gaps between march units. Actual LGTHCOLM and PST may vary somewhat, depending on conditions.

(2) To determine LGTHCOLM—

(*a*) Determine the number of motor vehicles in column. disregarding trailers or towed weapons.

(*b*) Locate the figure on the vertical scale at the left of the chart marked "Number of vehicles."

Table 2–7. Example of a Table of Precalcuated LGTHCOLM and PST

a. Movement of Less Than 25 Vehicles

1	2	3	4	5
		LGTHCOLM (km)	PST (min)	
1	Number of vehicles in column	Close column 48 veh per km 16 kmph	Open column 12 veh per km 24 kmph	Close column 48 veh per km 16 kmph	Open column 12 veh per km 24 kmph
2	1	0.0208	0.08	0.08	0.2
3	2	0.0416	0.16	0.16	0.4
4	3	0.0624	0.24	0.24	0.6
5	4	0.0832	0.32	0.32	0.8
6	5	0.1040	0.40	0.40	1.0
7	6	0.1248	0.48	0.48	1.2
8	7	0.1456	0.56	0.56	1.4
9	8	0.1604	0.64	0.64	1.6
10	9	0.1872	0.72	0.72	1.8
11	10	0.2080	0.80	0.80	2.0
12	20	0.4160	1.60	1.60	4.0

b. Movement of 25 or More Vehicles

1	2	3	4	5
		LGTHCOLM (km)	PST (min)	
1	Number of vehicles in column	Close column 48 veh per km 16 kmph	Open column 12 veh per km 24 kmph	Close column 48 veh per km 16 kmph	Open column 12 veh per km 24 kmph
2	1	0.048	0.12	0.18	0.3
3	2	0.096	0.24	0.36	0.6
4	3	0.144	0.36	0.54	0.9
5	4	0.192	0.48	0.72	1.2
6	5	0.240	0.60	0.90	1.5
7	6	0.288	0.72	1.08	1.8
8	7	0.336	0.84	1.26	2.1
9	8	0.384	0.96	1.44	2.4
10	9	0.432	1.08	1.62	2.7
11	10	0.480	1.20	1.80	3.0
12	20	0.960	2.40	3.60	6.0
13	30	1.440	3.60	5.40	9.0
14	40	1.920	4.80	7.20	12.0
15	50	2.400	6.00	9.00	15.0
16	60	2.880	7.20	10.80	18.0
17	70	3.360	8.40	12.60	21.0
18	80	3.840	9.60	14.40	24.0
19	90	4.320	10.80	16.20	27.0
20	100	4.800	12.00	18.00	30.0
21	200	9.600	24.00	36.00	60.0
22	300	14.400	36.00	54.00	90.0
23	400	19.200	48.00	72.00	120.0
24	500	24.000	60.00	90.00	150.0

(*c*) Locate the figure showing average density under which the movement will be made on the vertical scale marked "Density (veh per km)."

(*d*) Connect these two points with a straightedge. Read the figure at the point of intersection of the straightedge with the vertical scale marked "LGTHCOLM (km)."

(*e*) This will be the LGTHCOLM, in kilometers, occupied by the column under the given conditions.

(3) To determine PST—

(*a*) Obtain the LGTHCOLM as directed in (2) above.

(*b*) Locate the figure representing the speed in kilometers per hour on the vertical scale marked "Speed (kmph)."

(*c*) Connect these two points with a straightedge.

(*d*) Read the figure at the intersection of the straightedge with the vertical scale marked "PST (min) (hr)."

(*e*) This figure is the PST of the column under the conditions given.

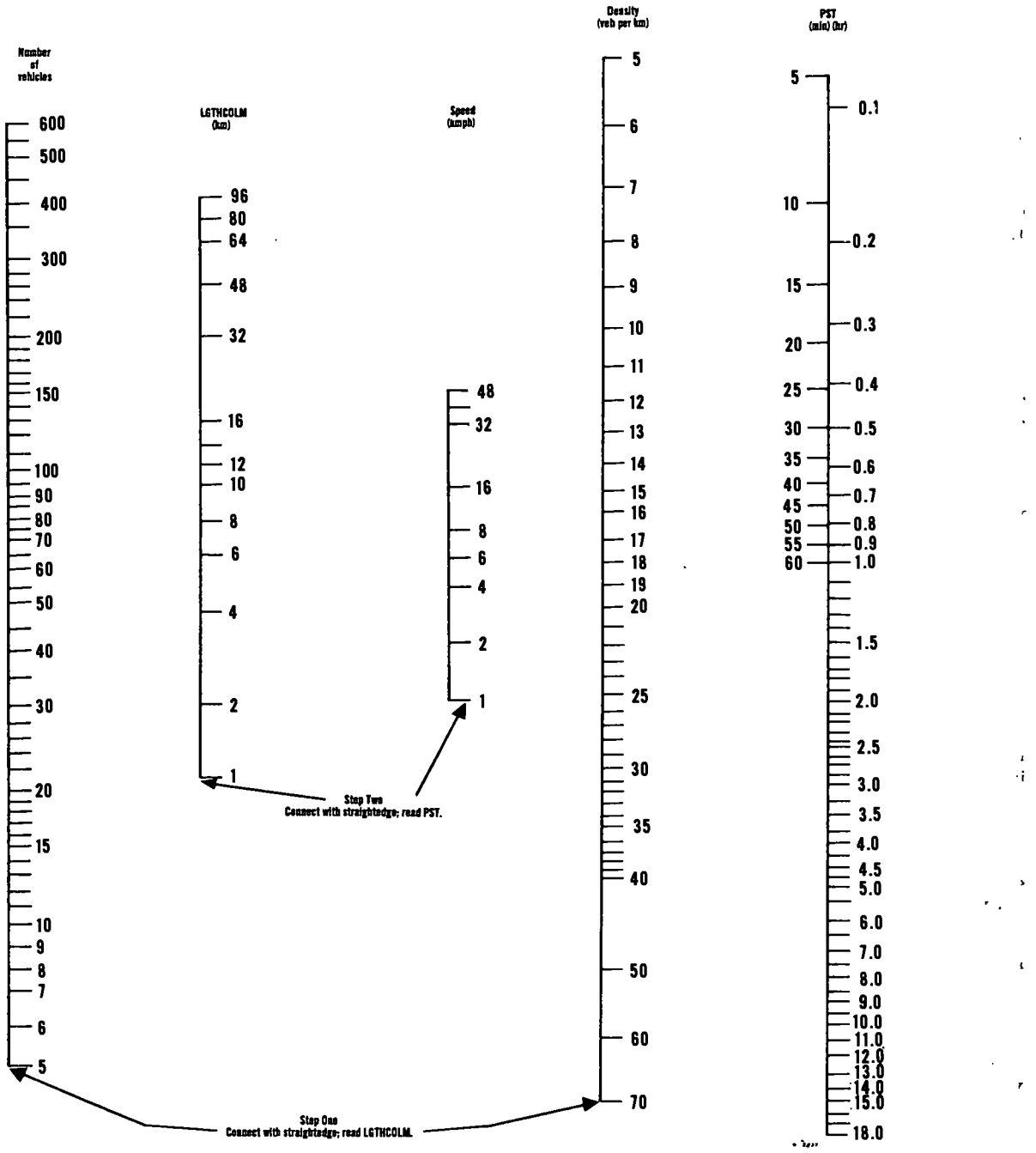

Figure 2–4. LGTHCOLM and PST nomograph.

TABLE 2–8. Example of Format for a Unit Table of LGTHCOLM and PST[1]

1	Unit	*	13	14	15	16	17	18	19	20	21	22	23
			PST (min)							LGTHCOLM (km)		PST (min)	
1			Men on foot colm of twos			Veh in march colm (colm 8)		Additional veh to carry foot trps (colm 9) ($2\frac{1}{2}$-ton trk)[2]	Total veh in march colm when unit moves by trk (colm 8 + colm 18)	Veh of units motorized (colm 19)		Veh of units motorized (colm 19)	
			2.5 kmph	3 kmph	4 kmph	Close colm 48 veh per km 16 kmph	Open colm 12 veh per km 24 kmph			Close colm 48 veh per km 16 kmph	Open colm 12 veh per km 24 kmph	Close colm 48 veh per km 16 kmph	Open colm 12 veh per km 24 kmph
2	Inf div (1)												
3	HHC												
4	Inf div bde HHC (ea) (3)												
5	Inf bn (ea) (8)												
	*	*	*		*			*	*		*		*
9	Tk bn												
	*	*	*		*			*	*		*		*
13	Inf bn (mech)												
	*	*	*		*			*	*		*		*
17	ADA bn												
	*	*	*		*			*	*		*		*
21	Armd cav sqdn												
	*	*	*		*			*	*		*		*
25	Div arty												
	*	*	*		*			*	*		*		*
39	Cbt avn bn												
	*	*	*		*			*	*		*		*
43	Engr bn												
	*	*	*		*			*	*		*		*
47	Sig bn												
	*	*	*		*			*	*		*		*
52	MP co												
53	DISCOM												
	*	*	*		*			*	*		*		*

[1] Based on TOE _____, dated _____.

[2] Based on 20 men per $2\frac{1}{2}$-ton trk with tlr.

Note 1. Use data in *d* above as guide in completing form.

2. Colm 2, 3, and 9—based on periodic reports on subordinate units.

3. Colm 6—group that normally precedes main body to a new area for reception of trps.

4. Colm 7—veh not required for immediate spt, e.g., kitchen, baggage, mtr maint, are designated fld tns.

5. Colm 10—number of men on foot (colm 9) × 1.2 or 2.7 (para 2–9*c*(1)) + COLMGP's = meters.

6. Colm 11, 12; 20, 21—number of veh × factor (para 2–10*a*(3)) + time gaps in km = km.

7. Colm 13—$15 \frac{\text{LGTHCOLM (colm 10)} \times 60}{\text{speed (kmph)}}$ = PST (min).

8. Colm 16, 17; 22, 23—number of veh × factor (para 2–10*a*(4)) + time gaps = PST (min).

9. Colm 18—number of men on foot (colm 9) ÷ 20 except to insure tactical integrity.

Table 2-9. Example of a Table of TDIS

Distance traveled (km ↓ / km →)	0	1	2	3	4	5	6	*7	8	9
0	0	4	8	11	15	19	23	26	30	34
10	38	41	45	49	53	56	60	64	68	71
20	75	79	83	86	90	94	98	101	105	109
30	113	116	120	124	128	131	135	139	143	146
40	150	154	158	161	165	169	173	176	180	184
50	188	191	195	199	203	206	210	214	218	221
60	225	229	233	236	240	244	248	251	255	259
70	263	266	270	274	278	281	285	289	293	296
80	300	304	308	311	315	319	323	326	330	334
90	338	341	345	349	353	356	360	364	368	371
100	375	379	383	386	390	394	398	401	405	409
110	413	416	420	424	428	431	435	439	443	446
120	450	454	458	461	465	569	473	476	480	484
130	488	491	495	499	503	506	510	514	518	521
140	525	529	533	536	540	544	548	551	555	559
150	563	566	570	574	578	581	585	589	593	596
*160	600	604	608	611	615	619	623	*626	630	634
170	638	641	645	649	653	656	660	664	668	671
180	675	679	683	686	690	694	698	701	705	709
190	713	716	720	724	728	731	735	739	743	746
200	750	754	758	761	765	769	773	776	780	784
					Time in minutes indicated here					

*Illustration of use.
PROBLEM. What is the TDIS of a vehicle moving between points A and B, which are 167 kilometers apart, at a rate of 16 kilometers per hour?
ANSWER: Enter left-hand column at 160, move across to the vertical line under 7, and read the TDIS of 626 minutes directly from the table.

e. Unit Table of LGTHCOLM and PST. The format in table 2-8 is for the infantry division. By using appropriate TOE and the basic formulas contained in *b* above, complete tables can be prepared for any unit.

f. Table of TDIS. Precomputed tables of TDIS for routine rates of march will simplify calculations. Table 2-9 is an example of such a table, based on 16 kilometers per hour.

g. Average Time Factors—Infantry Division.

(1) These data pertain to G3 time factors considered after an infantry division receives a movement order. They give the times required by the command for—

(*a*) Making preparations before the leading vehicle can arrive at the start point (SP).

(*b*) Completing the motor march and making preparations to launch a coordinated attack.

(2) The preparations before the leading vehicle can arrive at the SP include transmission of orders by division; assembling trucks; spotting trucks; map reconnaissance of routes, detrucking areas, and assembly areas; issue of extra ammunition; briefing of troops; and other normal preparations for an anticipated movement. This preparation pertains to the *first* trip, whether the division is completely motorized by the attached transportation and moves in one trip or whether the division moves by organic transportation in two or more trips (echelon). The earliest time in which the leading vehicle can pass the SP after receipt of the order by the division commander is as follows:

(*a*) If the order is received in daylight for a daylight march (e.g., received at 1000), the leading vehicle can cross the SP at 1130—1½ hours.

(*b*) If the order is received at night for a night march (e.g., received at 2200), the leading vehicle can cross the SP at 2400—2 hours.

(*c*) If the order is received in daylight for a night march (e.g., received at 1100), the leading vehicle can cross the SP 1 hour after beginning evening nautical twilight (para 2-28*c*).

(*d*) If the order is received at night for a daylight march, and more than 2 hours before beginning morning nautical twilight (e.g., received at 0200), the leading vehicle can cross the SP at beginning morning nautical twilight. (If

the order is received less than 2 hours before beginning morning nautical twilight, the time is the time the order was received plus 2 hours.)

Note. To determine corresponding time factors for a foot march rather than a motor march, use ½ hour less in (*a*), (*b*), and (*c*) above.

(3) The factors considered in computing time for an infantry division to complete a march and to make preparations for launching a coordinated attack depend on whether the march is made by echelon or completed in one trip. The time factors in (*a*) through (*d*) below apply only when the march is made by echelon. The time factors in (*e*) through (*i*) below apply to any motor move and outline the procedure used in determining the earliest time at which an infantry division can launch a coordinated attack. These factors are based on the assumption that the infantry division can launch a coordinated attack when each of the brigades participating in the coordinated attack is in position behind the line of departure (LD). Since the closing of these brigades requires more time than the preparation and movement of the other forces, supporting units, such as artillery, reserves, etc., will be in position before closing of the brigades on the LD. The factors are further based on the assumption that these assault forces will be the leading elements of the road movement serials.

(*a*) Dump cargo: day—15 minutes; night—30 minutes.

(*b*) Load cargo: day—30 minutes; night—60 minutes.

(*c*) Reassemble trucks for each trip made in convoy: day—20 minutes; night—40 minutes.

(*d*) Entruck personnel: day—10 minutes; night—20 minutes.

(*e*) Complete the motor march from the old area to the new area: see above.

Note. If the release point (RP) is 5 kilometers or less from the detrucking point (DP), TDIS will be the time to complete the move from the SP to the RP. Any consideration of time consumed in moving by motor from the RP to the DP in the new area is included in the time factors given in (*g*) below. If the distance is more than 5 kilometers from the RP to the DP, the time to traverse this distance must be added to the time required to complete the move from the SP to the RP before considering the time factor for detrucking troops in (*f*) below.

(*f*) Detruck, reform foot troops: day—5 minutes; night—10 minutes.

(*g*) Organization and movement in the new assembly area before troops reaching the foot SP for the foot march to the LD (this includes movement from the RP as outlined in (*e*) above as well as time to issue any additional rations or ammunition carried in each truck transporting troops): day—30 minutes; night—60 minutes.

(*h*) Time to move from foot SP in the new area to LD (TDIS of foot march): see paragraph 2–9*f*(1).

(*i*) Time for final preparation after the leading man reaches the LD and before launching a coordinated attack: day—60 minutes; night—90 minutes. (This factor includes time to close foot troops behind the LD, to reconnoiter, to issue orders in subordinate units. and to emplace and register infantry weapons where necessary.)

h. Average Time Factors—Armored Division.

(1) These data pertain to G3 time factors considered after an armored division receives a movement order. They give the times required by the command for—

(*a*) Making preparations before the leading vehicle can arrive at the SP.

(*b*) Completing the motor march and making preparations to launch a coordinated attack.

(2) The preparations before the leading vehicle can arrive at the SP are less time consuming than those in the infantry division because the armored division is able to move the entire division by organic vehicles. Preparations include transmission of orders by division, briefing of troops, and other normal preparations for an anticipated move. As SOP, armored division vehicles refuel and replenish expended ammunition whenever any element of the division makes a halt or enters an assembly area. Vehicles can then move as soon as personnel and equipment are loaded.

(*a*) If the order is received in daylight for a daylight march (e.g., received at 1000), the leading vehicle can cross the SP at 1045—¾ hour.

(*b*) If the order is received at night for a night march (e.g., received at 2200), the leading vehicle can cross the SP at 2300—1 hour.

(*c*) If the order is received in daylight for a night march (e.g., received at 1100), the leading vehicle can cross the SP 30 minutes after beginning evening nautical twilight (para 2–28*c*).

(*d*) If the order is received at night for a daylight march, and more than 1 hour before beginning morning nautical twilight (e.g., received at 0200), the leading vehicle can cross the SP at beginning morning nautical twilight. (If the order is received less than 1 hour before beginning morning nautical twilight, the time is the time that the order is received plus 1 hour.)

(3) The factors considered in computing time for an armored division or an infantry division (mechanized) to complete a march and to make preparations for launching a coordinated attack depend on whether the division is organized for combat. Presumably, the division is organized for combat in anticipation of the move and commitment to battle. The time factors in (*a*) and (*c*) below apply to any move and are based on the assumption that the armored division can launch a coordinated attack when two task forces (equivalent of one infantry battalion and one tank battalion) of each brigade are in position to attack. If the division formation is a column of brigades, only the time factors for the leading brigade are computed. If the division formation is brigades abreast, the time factors for the brigade with the greatest distance to traverse are computed as the factors for the entire division. If the division is not organized for combat, time must be allowed (as included in (*a*) below) to permit battalions and supporting units to assemble under a brigade and organize into task forces under the brigade commander. Other commands, such as the brigade in reserve, division troops, division artillery, DISCOM, and units placed in division troops, can be assumed to complete their organization in less time than a brigade and, therefore, are not included as a factor. The organization of brigades and task forces may be partially or entirely completed either in bivouac, assembly area, or attack position or a combination thereof. The time factor, however, remains the same.

(*a*) Organize brigades and task forces (in either one or a combination of bivouac, assembly area, and attack position): day—45 minutes; night—90 minutes.

(*b*) Complete march from old area to new area.

(*c*) Time for final reconnaissance. refueling, and preparations to cross the LD or leave attack position (may be a combined assembly area and attack position): day—30 minutes; night—60 minutes.

i. Road Movement Graph.

(1) A road movement graph (fig 2–5) is the simplest method of obtaining data required for a road movement table or order. It shows the approximate location at any hour of the head or tail of each serial, provided the road movement proceeds as scheduled. The vertical scale to the left, with point of origin at the bottom, serves as a distance scale in kilometers and should show the relative locations along the route of critical points where coordination of the movement is required. The horizontal scale provides a time scale in hours, beginning at the left with the earliest hour at which the first serial may start the march.

(2) A serial is shown graphically by drawing a line to represent the movement of the head of the serial and a line to represent the movement of the tail of the serial. The lines are parallel and are drawn with a slope that represents the rate of march. (At 10 kilometers per hour, the slope equals 10 kilometers on the vertical to 1 hour on the horizontal scale.)

(3) In the example of a road movement graph in figure 2–5, the 1st Infantry Division commander has directed that elements of the DISCOM and the 3d Birgade move under cover of darkness from their present bivouacs, areas A and B, to areas C and D. Foot troops and motor vehicles will move during the night 16–17 October. Movement is to begin 161900 October and is to be completed 170430 October.

j. Road Movement Table. A road movement table (table 2–10) is an annex to a march or an operation order. The road movement table contains information and instructions concerning the march serials involved in the movement; their serial numbers, rates of march, routes, SP; times of crossing the SP, RP, critical points; times of arrival at or departure from critical points; and other pertinent details. This information usually is obtained from an accurate knowledge of the status of routes and units and from a road movement graph (fig 2–5). If desired, planners may determine some of the information contained in the road movement table by march calculations. The road movement table usually consists of two parts—

(1) A data paragraph reflecting general information, or information common to two or more serials.

(2) A tabular list of the march serials, together with all other necessary information regarding them.

Road movement tables frequently require a wider distribution than a march or an operation order so that copies can be issued to movement control personnel, military police traffic posts, etc.

k. Strip Map. A strip map (fig 2–6) is a schematic sketch of the routes of march that contains useful information concerning them. The division or brigades should include a strip map as an annex to the unit march order. The strip map is particularly useful to small-unit commanders for organizational control. Using units should repro-

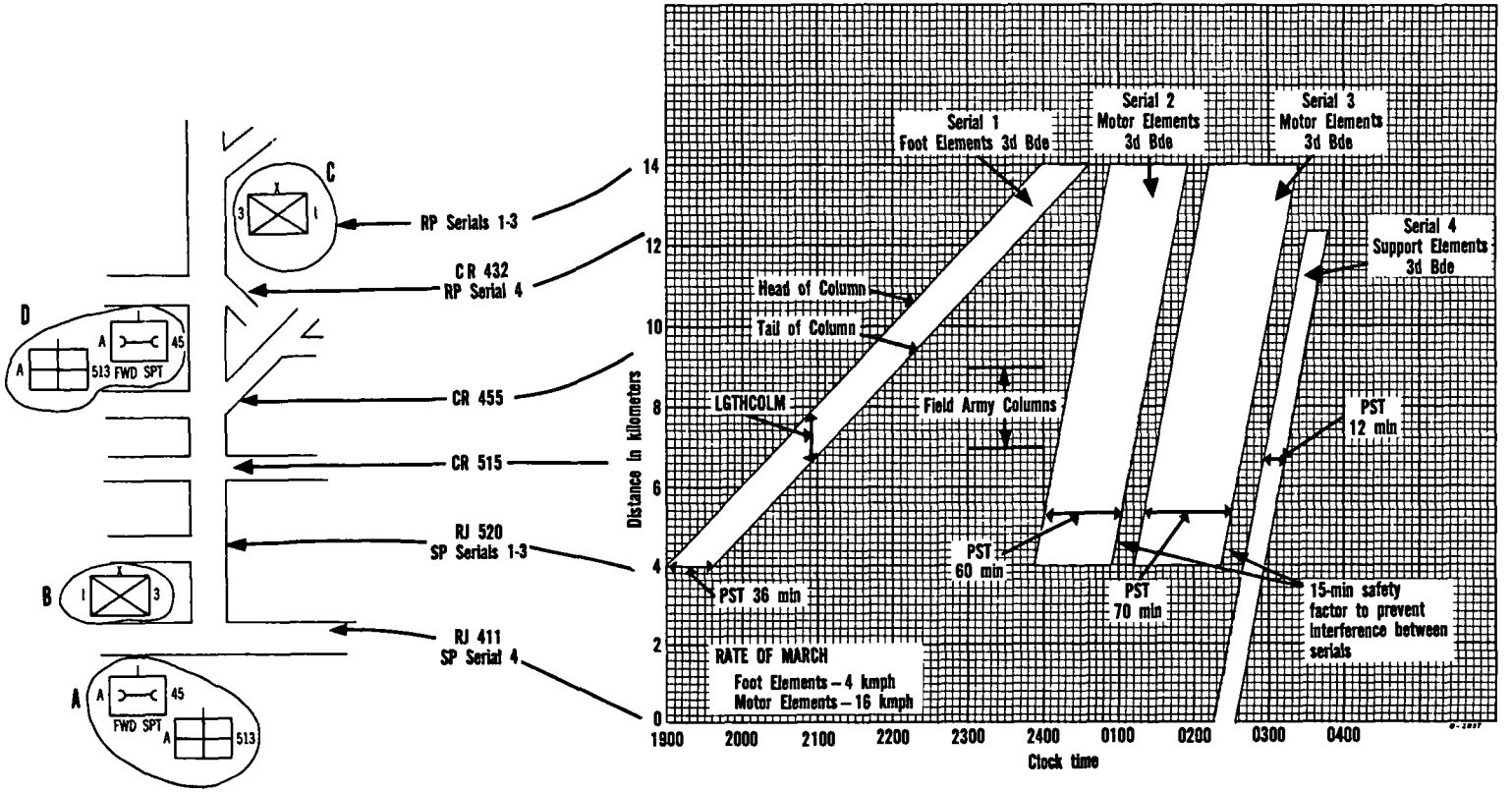

Figure 2–5. Example of a road movement graph.

duce strip maps in quantity and supply them to key personnel, particularly to vehicle commanders and route markers.

l. Vehicle Availability Table. The vehicle availability table (table 2–11) is useful in planning the movement of an infantry division in its own organic transportation. It helps the transportation officer make a plan for drawing 2½- or 5-ton trucks from subordinate units of the division in accordance with their capability to furnish them. The table lists across its top all the subordinate units of the division except the cavalry squadron. This unit is omitted because its vehicles normally are not available. In column 1, the 2½- and 5-ton trucks of the division are divided into priorities of availability according to their normal uses. When the transportation officer levies units for trucks, he will deplete each priority, starting with the highest, until he obtains the required number of vehicles. The table does not show all 2½- and 5-ton trucks of the division. The table omits the prime movers, maintenance vehicles, command and fire control vehicles, and essential signal communication vehicles because these vehicles do not haul general cargo or transport troops or other units. For any given move, the number of vehicles actually available will vary because of deadlined trucks, combat losses, and restrictions applicable to the move under consideration. Using the vehicle availability table and the troop strengths of the units requiring additional transportation, the planner can quickly and accurately determine the number and source of vehicles required for the march.

m. Vehicle Assignment Table. The vehicle assignment table (table 2–12) shows from which units planners can draw 2½- or 5-ton trucks (colm 1) and to which units they can assign these trucks (colm 2—6) for the move. The vehicle availability table (table 2–11) is the basis for this table.

n. March Calculator. A march calculator (fig 2–7) is a special form of slide rule. The user can read the desired LGTHCOLM or PST of any unit from the calculator if he knows the number of vehicles in the unit column. The calculator readings include the LGTHCOLM or the time (gaps) between march units but not those between march serials of battalion, task force, or brigade size. When using the calculator to determine the LGTHCOLM or PST of two or more brigades, the planner adds to the readings a 15-minute time gap (or equivalent LGTHCOLM) for each gap between march serials of brigade size, plus a 5-minute time gap (or equivalent LGTHCOLM) for each gap between subordinate march serials of battalion or task force size. The time gaps between march units of company, battery, or troop size are built into the readings of the calculator.

2–12. Motor Movement by Echelon

a. Definition. Motor movement by echelon is a movement in which a unit, such as an infantry division, lacking sufficient organic transportation to move all its personnel and equipment in one trip, uses a portion of its transportation to move its foot troops and essential supplies (by complete tactical units) in successive trips until it has completed the entire movement.

b. Sequence. The sequence of events in terms of time consumed is as follows:

(1) Preparation time (first echelon).

(2) TDIS (each route).

(3) PST (close entire first echelon).

(4) Unloading.

(5) Reassembly.

(6) TDIS (each route).

(7) PST (returning trucks).

(8) Loading.

(9) Reassembly (head of column at SP).

(10) TDIS (each route).

(11) PST (close entire second echelon).

c. Basic Principles. Although planners must use vehicles to the maximum in a movement by echelon, they must observe certain basic principles if they are to maintain the combat efficiency of the division. For example—

(1) In levying units for transportation, exclude weapon vehicles; prime movers; maintenance trucks; and essential command, reconnaissance, and signal communication vehicles. Units must retain their battlefield mobility and effectiveness.

(2) Leaving sufficient ammunition vehicles with units moved in the first echelon enables these units to conduct operations until resupply can be accomplished. Preferably, these units have the use of all their ammunition vehicles. However, they normally can retain at least two-thirds of them.

(3) Normally, provision is made for the field trains to march with their parent organizations. Field trains consist of kitchen, baggage, and administrative vehicles and those vehicles. such as

Table 2-10. Example of a Road Movement Table

(CLASSIFICATION)

ANNEX B (ROAD MOVEMENT TABLE) to OPORD 9-20th Inf Div
Reference: Map, Series M504 AFGAN, Sheet 4842 (BHAD-WURST), Edition 1-DMG, 1:000,000.
Time Zone Used Throughout the Order: ZULU

General Data:

1. AVERAGE SPEED: 20 kmph.
2. TRAFFIC DENSITY: 20 veh per km.
3. HALTS: SOP.
4. ROUTES
   a. Route RED. Serials: 1, 3, 4, and 5.
   b. Route BLUE. Serials: 2 and 6.
5. CRITICAL POINTS
   a. Route RED.
      (1) Start point: RJ 413 at MB201699.
      (2) Release point: RJ 211 at QA990628.
      (3) Other critical points.
         (a) RJ (VILLERS) at MB330718
         (b) RJ 242 at NB455701.
         (c) RJ (LAWST) at DA585692.
         (d) BLUE River bridge at PA683686.
      (4) Route classification: 6×50.
      (5) Route restrictions: BLUE River bridge—6×50.
   b. Route BLUE.
      (1) Start point: RJ 526 at MS229509.
      (2) Release point: RJ 105 at RS981511.
      (3) Other critical points.
         (a) RJ 592 at MS334481.
         (b) RJ (CHANCE) at NS401490.
         (c) RJ (VEGAS) at AT 790501.
         (d) BLUE River bridge at RS850495.
      (4) Route classification: 10×50.
      (5) Route restrictions: BLUE River bridge—6×50.
6. MAIN ROUTES TO START POINTS: * * *.
7. MAIN ROUTES FROM RELEASE POINTS: * * *.

Serial No. [1] (a)	Date [2] (b)	Unit (c)	No. of Vehicles (d)	Load Class of Heaviest Vehicle (e)	From [2] (f)	To [2] (g)	Route (h)	Route to Start Point (i)	Critical Points [3] Ref. (j)	Due (k)	Clear (l)	Route from Release Point (m)	Remarks (n)
1	* * *	1st Bde COL Long, Comdr.	* * *	* * *	BHAD area	WURST area	RED	* * *	SP	0530	0635	* * *	* * *
									RJ (VILLERS)	0610	0715	* * *	* * *
									RJ 242	0630	0735		
									RJ (LAWST)	0715	0820		
									BLUE River bridge	0755	0900		
									RJ (HAINS)	0815	0920		
									RP	0855	1000		
*			*		*			*	*			*	*
5	* * *	Div Trp LTC Camp, Comdr.	* * *	* * *	BHAD area	WURST area	RED	* * *	SP	0935	1131		
									RJ (VILLERS)	1015	1211		
									RJ 242	1035	1231		
									RJ (LAWST)	1120	1316		
									BLUE River bridge	1200	1356		
									RJ (HAINS)	1220	1416		
									RP	1300	1456		
6	* * *	DISCOM COL Norling, Comdr.	* * *	* * *	BHAD area	WURST area	BLUE	* * *	SP	0944	1200	* * *	* * *
									RJ 592	1002	1218		
									RJ (CHANCE)	1044	1300		
									RJ (VEGAS)	1214	1430		
									BLUE River bridge	1254	1510		
									RP	1334	1550		

[1] This is the number that identifies a column (or element thereof) during the whole of the movement.

[2] Since the table may be issued to personnel concerned with control of traffic, the security aspect must be remembered. It may not be desirable to include dates or locations.

[3] Critical point is defined as a selected point along a route used for reference in giving instructions. It includes start points, release points, and other points along a route where interference with movement may occur or where timings are critical.

Note 1. Only the minimum number of headings above should be used. Any information common to two or more movement numbers or identification serial numbers should be included in the general data paragraphs.
2. If the table is issued by itself, and not as an annex to a more detailed order, the table must be signed or authenticated in the normal way.
3. If an annex has the same distribution as an operation order, it is not necessary to include the headings shown in this example.

Table 2–11. Example of a Vehicle Availability Table

1	2	3	4	5	6	7	8	9	10	11	12	13	14	15	16	17	18	19	20
Priority	Normal use	1st Bde/ 20th Inf Div	2d Bde/ 20th Inf Div	3d Bde/ 20th Inf Div	HHB/ 20th Inf Div Arty	1–45 Arty	1–46 Arty	1–47 Arty	1–48 Arty	1–49 Arty	1–439 Arty (CHAP/ Vulcan)	20th Engr	1–2 Armor	HHC/ 20th Inf Div	20th Sig*	20th MP Co	20th Inf DIS-COM	20th Avn	Total div
		Max/Aval																	Max/Aval
1	Sup and gen cgo	3/	3/	3/	3/	3/	3/	3/	3/	3/	4/	5/	15/	0/	0/	0/	6/	0/	57/
2	Org equip	0/	0/	0/	7/	9/	9/	9/	9/	9/	8/	10/	7/	1/	6/	0/	9/	10/	110/
3	Ki trk	7/	7/	7/	1/	3/	3/	3/	3/	3/	3/	6/	6/	1/	1/	1/	3/	1/	60/
4	Engr tools and brg	4/	4/	4/	0/	0/	0/	0/	0/	0/	0/	57/	0/	0/	0/	0/	0/	0/	69/
5	Ammo trk	11/	11/	11/	0/	10/	10/	10/	10/	10/	0/	0/	9/	0/	0/	0/	0/	0/	92/
6	Sig comm	0/	0/	0/	3/	0/	0/	0/	0/	0/	0/	1/	0/	0/	0/	0/	0/	0/	4/
	Total	25/	25/	25/	14/	25/	25/	25/	25/	25/	15/	79/	37/	2/	7/	1/	18/	11/	392/

*Sig bn veh shown are those without shelters or sig equip installed thereon.
Maximum availability 1/1 Current availability.

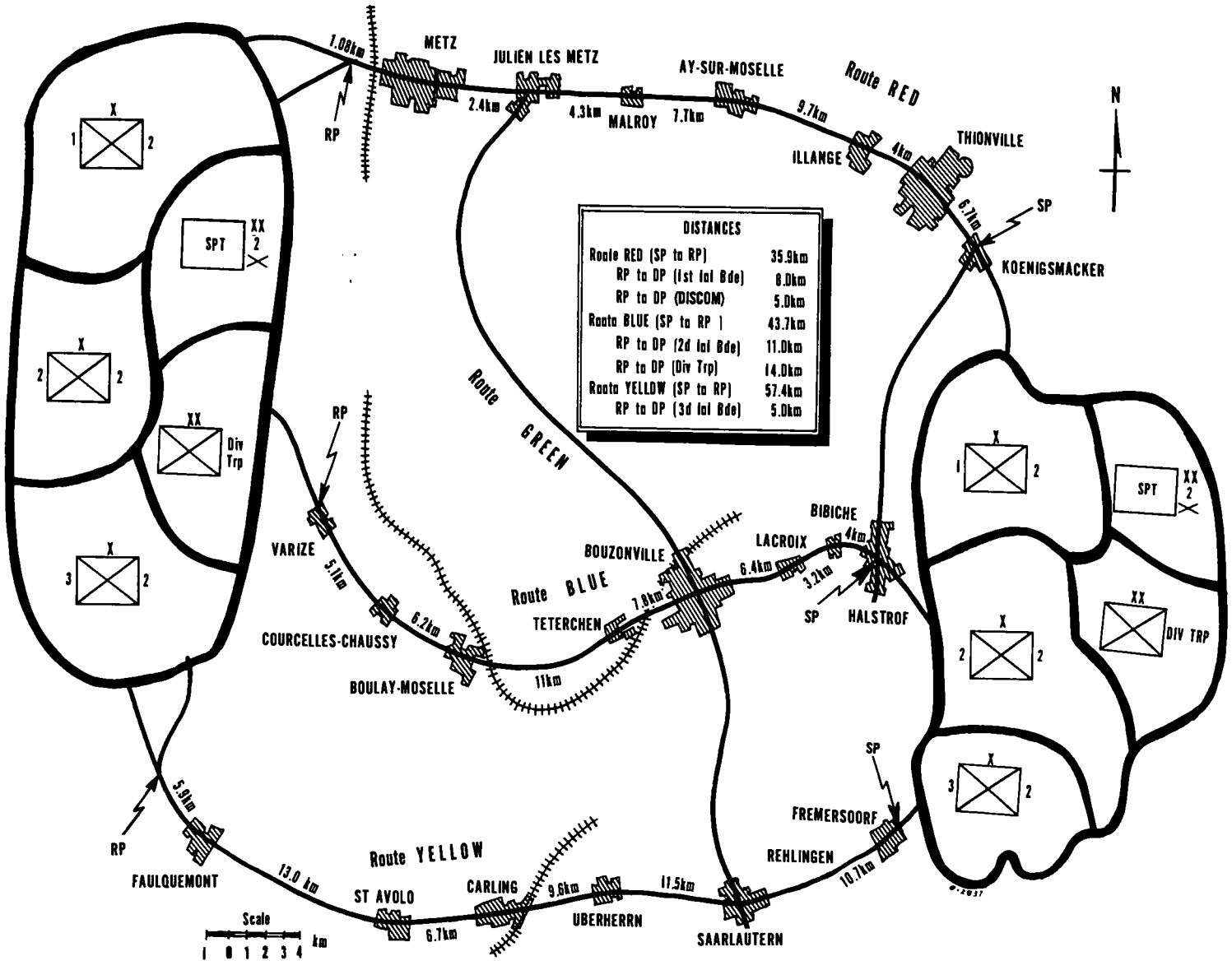

Figure 2–6. Example of a strip map.

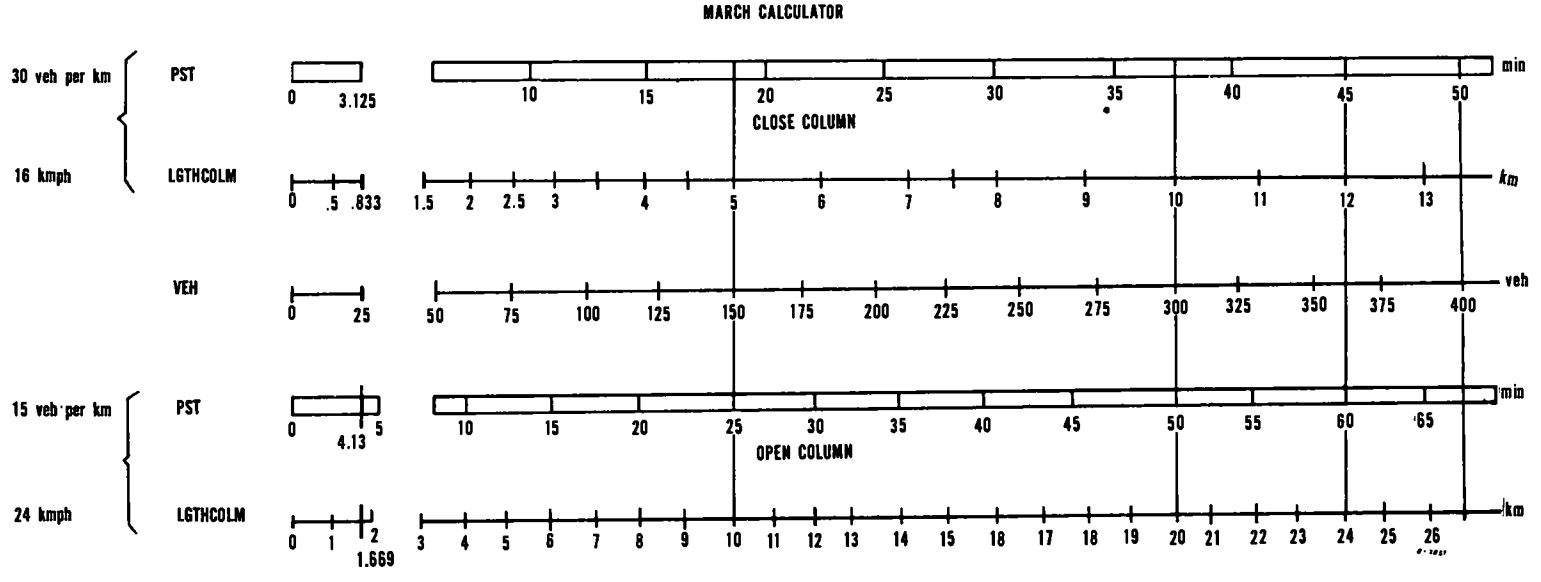

INSTRUCTIONS

1. To find LGTHCOLM and PST of any unit, set edge of slide rule at number of vehicles in that unit and read LGTHCOLM and PST on the appropriate scale above or below.
2. For composite groupings, add vehicles and read as in 1 above.
3. When vehicles in column exceed 400, compute for one-half of total and double the answer.
4. Figures are based on latest TOE's.
5. Readings include LGTHCOLM and time gaps between march units but not between march serials of battalion, task force, or brigade size.
6. When using the calculator to determine LGTHCOLM's or PST's of two or more brigade-size units, add to readings a 15-minute time gap (or equivalent LGTHCOLM) for each gap between these march columns. When brigades are divided into subordinate battalion task force-size serials, add a 5-minute time gap (or equivalent LGTHCOLM) for each gap between subordinate serials. The normal 2-minute time gaps between company-, battery-, or troop-size march units are included in the readings shown in the scales of this calculator.

Figure 2–7. Example of a march calculator.

Table 2-12. Example of a Vehicle Assignment Table

1	1	2	3	4	5	6
1	Unit that furnishes transport	1st echelon			2d echelon	
		1st Bde	2d Bde	3d Bde	Sig hn	Other elements
2	1st Bde			22		
3	2d Bde			20		
4	3d Bde	18				
5	1-1 Armor					5
6	1-2 Armor				5	
7	1-45 Arty					6
8	1-46 Arty					7
9	20th S&T	10				
10	20th Engr		45			
11	20th Sig		18			
12	Total	28	63	42	5	18

fuel, medical, and maintenance vehicles, that are not part of the combat trains. On arrival in the new area, field train vehicles in the first echelon, assigned for movement of the second echelon, dump their cargo and return to assist in moving that echelon.

(4) Dumping of the cargo of a large number of vehicles in the forward area is avoided.

(5) Vehicles taken from a unit operate as a group whenever possible to facilitate control and maintenance by the parent unit.

(6) Vehicles from other elements of a unit move the foot troops of that unit whenever possible. Similarly, vehicles from units usually associated in a normal combat grouping should move the foot troops of that grouping.

(7) Only 2½- or 5-ton trucks, including dump trucks, unless otherwise prescribed. move foot troops.

d. SOP. Because motor movement by echelon requires careful planning, the division should have several plans in the form of SOP. Time for planning such moves will nearly always be short. In such situations, to modify an existing plan is much quicker than to prepare an entirely new one. SOP plans should contain—

(1) A plan number.

(2) A standard composition for the division security force.

(3) Standard composition and duties of the quartering (advance) party.

(4) The units to move in each echelon.

(5) Organization of columns.

(6) The assignment of vehicles to move foot troops and impedimenta, showing the unit from which obtained and the unit to which assigned for the move.

(7) Adequate provisions for signposting and traffic control.

e. Time Formula. When time precludes detailed planning, such as outlined above, the following formula may be useful in rapidly estimating the total time of such a movement:

$$\text{Hours required} = \frac{\text{number of trips} \times \text{distance in km}}{\text{rate of march in km in the hr}} + T$$

(1) The "number of trips" is the number of trips in either direction; e.g., in a two-echelon movement, three trips would be required—one forward trip to move foot troops, a return trip. and a second trip forward for the remainder of troops and organic loads.

(2) T (a variable) represents the number of hours consumed in unloading and loading personnel and equipment, in turnarounds at forward and rear assembly areas, and in closing the column into its destination area. When two routes are available and the movement is in close column in two echelons, a value of 6 may be assumed for T as giving a reasonable factor for safety. When more than two routes are available, the value of T may be reduced.

(3) The "rate of march in km in the hr" represents the average speed of the vehicles in the movement over a time, including short halts.

2–13. Movement by Air

a. Movement of Army units by USAF airlift is of two types—administrative and tactical. The Military Airlift Command (MAC) normally provides supporting airlift for intertheater administrative movements. Tactical air command (TAC) units normally provide supporting airlift for intratheater tactical movements. However, at times MAC aircraft may augment a tactical airlift operation for personnel or materiel airdrop. Under these conditions, a TAC unit usually provides the airlift task force commander.

b. An administrative air movement (chap 6) is simpler than a tactical air movement. Loading for administrative air movement takes maximum advantage of the aircraft's mission-payload capabilities. Loading methods for a tactical air movement include parachute assault for personnel and equipment, tactical air landings, and administrative air landings. After the initial parachute assault phase, the tactical plan may call for TAC elements to airdrop supplies and equipment as part of the followup echelon. A tactical air movement may include such aircraft formations as V's in trail, intrail offset, and columns.

c. The planning differs for tactical and administrative air movements. In planning an administrative air movement, the supported Army unit commander must be prepared to provide the MAC airlift commander with his total movement requirement—the number of troops, the weight and cubage of materiel, a separate listing of outsize equipment, and the quantity and description of hazardous cargo to be carried. In tactical air movements, the roles are reversed. Because his mission is the dominant factor, the ground force commander assumes the major role. At the initial planning conference, the ground force commander must be prepared to provide the TAC airlift commander the concept of operations, including the ground tactical plan; the total force to be airlifted and supported by air; and preliminary aircraft loading tables, which show the airdrop and airlanding requirements. Joint and concurrent planning is essential throughout the operations.

d. The air movement of a large body of troops normally involves concurrent departures from several airfields and concurrent landings at several terminal landing sites in the objective area. The availability of transport aircraft and base facilities, the urgency of the situation, and the likelihood of hostile interference are major factors that determine the number of installations employed and the number of sorties that the transporting aircraft will make. For staff procedures, air movement tables, and other forms relative to air movements, see FM 55–15 and FM 100–27.

e. Tables 2–13 and 2–14 can be used as planning guides for determining the approximate helicopter and fixed-wing requirements for transporting cargo or personnel in Army aircraft. Information for these tables was extracted from FM 101–20 and TM 55–604. Crewmen should not be counted against payload weight or troop capacity. The recommended weight of payload and fuel is for extended operation at 60° F., no wind and at sea level. For one-time emergency flights, this figure may be increased to the design limit of the helicopter. The 55–1520-series of technical manuals for the respective aircraft gives the lift capability at temperatures other than 60° F. and at higher elevations.

2–14. Water Movements

a. General. Chapter 6 contains capacities of ships and craft, sea distances, steaming rates, turnaround times, and factors for cargo shipping.

b. Assault Landings Over Beaches.

(1) *Beach analysis and selection.* Strategic considerations aside, the basis for selection of a beach for an assault landing is the potential of the beach and hinterland to permit the initial landing and the followup logistic support of the forces required for the operation. From a logistic standpoint, the most important considerations are the characteristics of the beach, beach exits, and hinterland and the forecast weather conditions as they influence the ability of the combat service support forces to support and maintain the forces ashore. Increased use of helicopters and amphibious vehicles makes possible the use of less desirable beach areas in the initial assault. Under new concepts of operation and with the employment of nuclear weapons, dispersal of forces and supplies will be necessary; therefore, emphasis will be on the analysis and selection of many small beaches, adequately linked by lines of communications, rather than a few long ones as in the past.

(2) *Considerations in selection.* Planners should make a detailed investigation and thorough study of the hydrography and topography of the landing area and the long-range forecasts of the weather that may be encountered. Primary considerations in selecting beaches for assault landings are discussed below (fig 2–8 depicts certain of the features discussed).

Table 2-13. Army Helicopter Payload Guidance

1		2	3	4	5	6	7	8	9	10
1		K30645 OH-6A (Cayuse) obsn	K30746 OH-13S (Sioux) obsn	K30961 OH-23G (Raven) obsn	K31749 UH-1B (Iroquois) util	K31786 UH-1D (Iroquois) util	Z33545 UH-1H (Iroquois) util	K30383/K30449 CH-47B/C (Chinook) cgo	K30515 CH-54A (Sky Crane) cgo	K29660 AH-1G (Huey Cobra) atk
	Cargo door:									
2	Dimensions-width/height (in.)				48×48	74×49		90×78		
3	Location				left & right	left & right		rear		
	Cargo compartment:									
4	Height of floor above ground (in)				14	15		30		
5	Length, usable (in)				60	92		366		
6	Width, floor (in)				80.5	96		90		
7	Height, clear of obstructions (in)				54	54		78	78	
8	Cargo space, optimum (cu ft)				140	220		1,474		
	External cargo:									
9	Max hook or sling capacity (lb)				3,000	4,000		20,000	20,760	
10	Rescue hoist capacity (lb)						600	600		
11	Cargo-loading winch capacity (lb)							3,000		
	Passenger capacity:									
12	No. of troop seats (240 lb per man)	3	2	2	7	11	11	33		
13	No. of litter and ambulatory	2/1	2/2	2/0-1/1	3/1	6/1	6/1	24/3		
	Operational characteristics:									
14	Useful load (lb) [a]	1,237	870	886	3,865	4,580	4,580	[b] 20,445 [c] 23,380	20,170	3,590
15	Normal cruising speed (knots) [d]	119	70	70	90	100	100	[b] 150 [c] 155	100	130

[a] Useful load is the load-carrying capability of an aircraft. It includes payload, crew, and usable fuel and oil required for the mission. Thus, a reduction of the fuel load reduces the endurance and increases the payload. (The payload is the useful load less the crew, full oil, and required fuel for the mission.) Full oil is required for all missions.

[b] CH-47B.

[c] CH-47C.

[d] Normal cruising speed is the true airspeed that an aircraft can normally be expected to maintain at some standard power setting below rated military power. This speed will vary with altitude. Airspeeds and fuel consumptions will vary with gross weight, power settings, altitude, and aircraft.

Table 2-14. Army Fixed-Wing Payload Guidance

	1	2	3	4	5	6	7	8	9	10
1		A30071/A30121 O-1A/E (Bird Dog) ohsn	A30171 OV-1A (Mohawk) ohsn	A30221 OV-1B (Mohawk) obsn	A30241 OV-1C (Mohawk) ohsn	A30621 U-1A (Otter) util	A30671 U-6A (Beaver) util	A30721 U-8D (Seminole) util	A30821 U-8F (Seminole) util	A30946 U-21A (Shawnee) util
	Cargo door:									
2	Dimensions-width and height (in)	45×33				46×45 left	39×40	35×36.5	50.5×26.5	50.5×53
3	Location	right				30×45 right	left & right	right	left	left
	Cargo compartment:									
4	Height of floor above ground (in.)					46	46	48	48	48
5	Length, usable (in.)					156	76	86	110.6	110.5
6	Width, floor (in.)					60	48	53.6	55	55
7	Height, clear of obstructions (in.)					60	51	53	55	55
8	Cargo space, optimum (cu ft)					293	125	115	158	158
	External cargo:									
9	Max hook or sling capacity (lb)	500	4,000	4,000	4,000		1,000			
	Passenger capacity:									
10	No. of troop seats (240 lb per man)	1				10	5	5	5	10
11	No. of litter and ambulatory	0/1				6/3	2/2	0/5	0/5	3/3
	Operational characteristics:									
12	Useful load (lb) [1]	782 (0-1A) 551 (0-1E)	4,812	4,812	4,812	3,100	2,000	2,300	2,210	4,167
13	Normal cruising speed (knots) [2]	87	225	225	225	104	105	155	160	180

[1] Useful load is the load-carrying capability of an aircraft. It includes payload, crew, and usable fuel and oil required for the mission. Thus, a reduction of the fuel load reduces the endurance and increases the payload. (The payload is the useful load less the crew, full oil, and required fuel for the mission.) Full oil is required for all missions.

[2] Normal cruising speed is the true airspeed that an aircraft can normally be expected to maintain at some standard power setting below rated military power. This speed will vary with altitude. Airspeeds and fuel consumptions will vary with gross weight, power settings, altitude, and aircraft.

GENERAL BEACH PROFILE DIAGRAM

(TIDAL SEA)

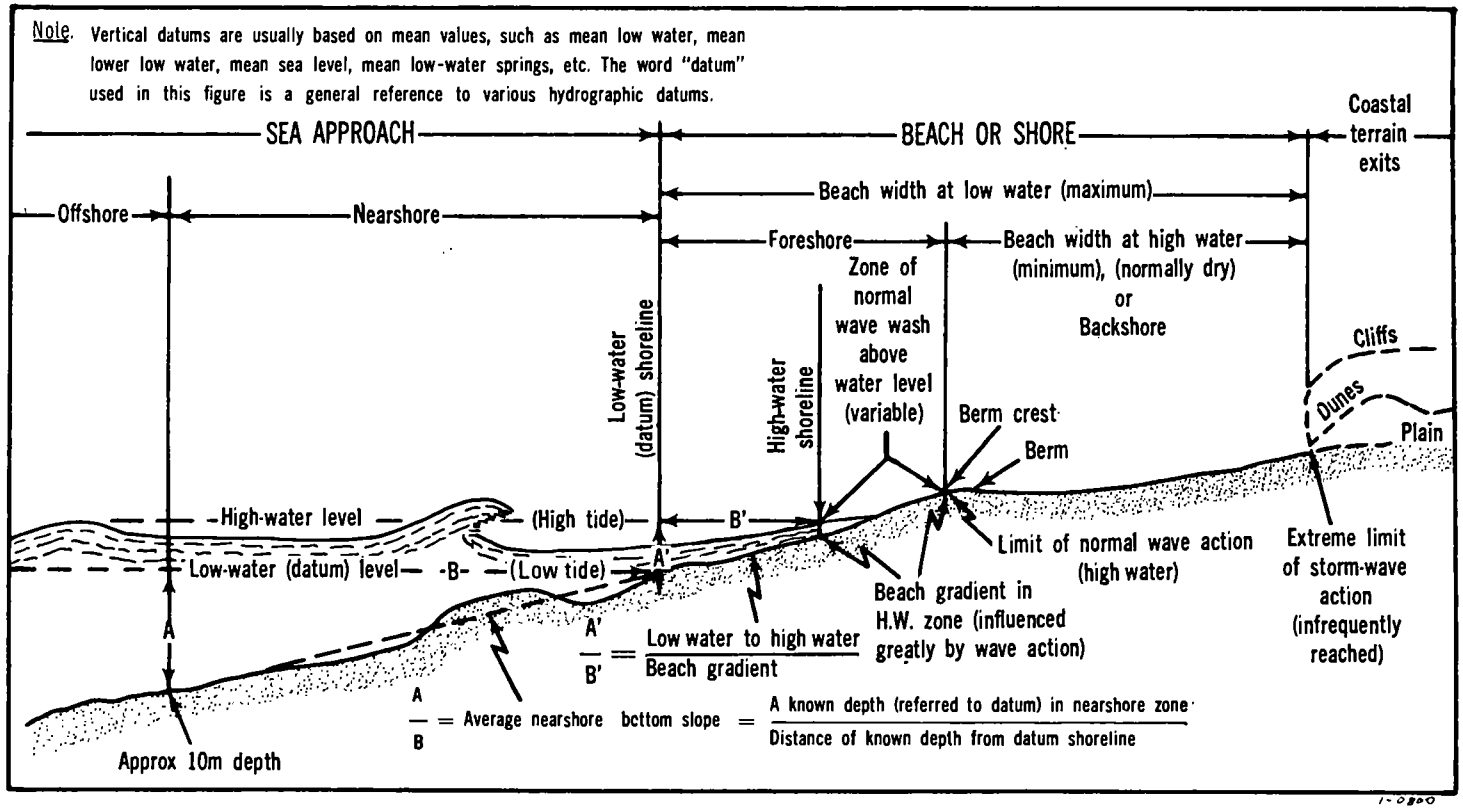

Figure 2–8. General beach profile diagram.

(*a*) *Tides.* The stages of the tide, the tidal range, and the tidal currents affect the passage of underwater obstacles, offshore bars, reefs or shoals, the beaching or stranding of landing craft, and the width of the beach available for operations.

(*b*) *Surf.*

1. Waves breaking onto a beach (surf) may cause landing craft to broach to, thus necessitating a study of surf in connection with landing operations. Surf action depends on wind, tide, and depth of water. On flat, nearshore bottoms, waves break and are spent before reaching the shoreline. Over steep slopes, the surf breaks near the shore and consequently has more effect on the beaching of craft. Waves usually break over reefs, where they exist, thus leaving the inner area relatively unaffected. Forecasters can predict surf conditions hours—in some cases days—in advance for almost all shores of ocean areas for which they receive regular weather reports. Waves created by distant storms may break on a shore with a high or heavy surf, even while local weather conditions are otherwise favorable. Surf forceasts should cover the entire operation and should be available for use as long as any operations across the unprotected beaches are necessary.

2. The height of the surf markedly affects the satisfactory operation of amphibious vehicles and landing craft. Lighters, amphibious, resupply, cargo (LARC)–5, experience a 50-percent reduction in effectiveness when the height of the surf reaches 3 feet; LARC–15's when the height is 4 feet; and LARC–60's when the height reaches 6 feet. Except during emergencies, operation is usually suspended when the surf exceeds 5 feet for LARC–5's, 6 feet for LARC–15's, and 8 feet for LARC–60's. Landing craft, vehicle, personnel (LCVP), are effective when the surf is not more than 3 feet; landing craft, mechanized (LCM). can operate satisfactorily in a surf of not more than 5 feet; and landing vehicles, tracked, personnel (LVTP)–5, are effective through surf up to 8 feet high.

(*c*) *Nearshore bottom gradient.* Gently sloping bottom gradients cause landing craft to ground at a considerable distance from the shoreline, which increases the hazard and the time of unloading. Beaches with steep gradients are subject to heavy surf. Because a steep gradient usually extends shoreward from the waterline, planners can anticipate difficulty in moving vehicles and cargo off the beach. A beach gradient of 1 to 20 (1-foot increase in water depth each 20 feet seaward from the waterline) is nearly ideal for the operation of landing craft and amphibious vehicles.

(*d*) *Reefs.* In many places, reefs or shoals fringe the shorelines and must be studied before conducting beaching operations. A minimum 6-foot depth of water should be available over reefs or shoals at low tide to permit the low-water operation of landing craft. This is not the normal situation because most reefs are either close to the surface or entirely exposed at low tide, in which case certain craft must operate at high tide only. A minimum 11-foot depth of water at low tide is required for the operation of landing ships, tank (LST). When selecting beach sites, planners should avoid reefs or shoals that limit operations.

(*e*) *Weather.* Planners must consider predicted weather conditions in relation to the projected operation. Adverse weather conditions and their effects on tide and surf may make the operations too hazardous or impossible. Haze or fog conditions may be advantageous or disadvantageous, depending on overall considerations of the operation in question. The weather considerations should cover the entire operation and should insure favorable conditions for not only the assault landings but also the followup and buildup phases.

(*f*) *Topography.* Having made a lodgment ashore, the landing forces will expand the beachhead and initiate general movement inland. Topographic features are of immediate importance. Considerations are the overall length of beach; the extent of access to the interior from the beach (number of corridors and utility of each, the existing road net and means of reaching it from the beach); and areas suitable for supply dumps (both in the beach area and inland), airstrips, airdrops, helicopter landing sites, and cover and concealment. Planners must analyze each of these factors with respect to the advantages or disadvantages that a particular site may offer.

(*g*) *Equipment.* Planners determine requirements for equipment to unload supplies over the beach. If available equipment will not be adequate, they must try early to procure sufficient amounts of the proper types.

(*h*) *Enemy action.* Enemy action may be active or passive, or both. Active enemy action includes the use of existing defense installations, established fields of fire, and defending forces. Enemy air and naval capabilities also are considerations. Passive enemy action includes obstacles, demolitions, and mines in water adjacent to the beach, on the beach, and immediately inland. All

these will affect the ability of the combat service support troops to furnish the necessary logistic support.

(*i*) *Troop availability.* Planners must analyze troops available for the operation, to include extent of training, experience, and general suitability of combat, combat support, and combat service support elements for the operation.

(*j*) *Time.* After analyzing the factors in (*a*) through (*i*) above, planners can decide the time and the place to launch an operation. Additionally, visibility (because it affects surprise and operations) in the relative number of hours of darkness, moonlight, and daylight influences the exact time (week, day, and hour) for the assault. The relative effectiveness of the fire and support of the assaulting and defending forces will determine whether the landing takes place in darkness or daylight.

(3) *Beach capacity for assault landing.*

(*a*) *Size of beaches.* The number of troops that can land simultaneously in assault over a given beach results from a combination of factors. The tactical formation employed by the assault troops should be the dominant factor, provided safety precautions and good judgment are not sacrificed. In general, the length of beach required for landing an infantry brigade varies with its task organization.

(*b*) *Time and space factors for landing craft and amphibious vehicles.* The interval between landing craft or amphibious vehicles landed simultaneously on a beach varies from 45 to 90 meters. The time interval between waves varies from 1 to 15 minutes.

(*c*) *Average landing times.* The combat elements of a battalion landing team (BLT) require 2 hours to land over one landing beach employing 17 landing vehicles, tracked, howitzer (LVTH), and 15 LVTP.

(*d*) *Assault shipping requirements.* When employed in the assault, the reinforced infantry division task organization (considered at 25,000 men, for this example) will typically provide assault BLT, a division artillery grouping, a division reserve grouping, a division shore party grouping, and a division combat service support grouping. The reinforced armored division may also be an assault division. Assault shipping required for a reinforced infantry division will vary according to the tactical mission and length of voyage. (The number of landing ships varies in proportion to the number of amphibious vehicles; ground combat vehicles; landing craft, utility (LCU); and LCM to be carried.)

1. For long voyages (e.g., 10 days), planners primarily must consider provision of the type of shipping that will negotiate the distance at a suitable speed and that will best accommodate the embarked troops. Attack transports (LPA) and amphibious cargo ships (LKA) meet these requirements better than landing ships. Assault shipping for a reinforced infantry division for an extended voyage, therefore, conforms to the general pattern that table 2–15 depicts.

2. For short voyages (e.g., 48 to 72 hours), accommodation of embarked troops can be subordinated to provision of the most suitable shipping for ease and efficiency in loading and unloading. Landing ships meet these requirements better than LPA and LKA, especially when ground combat vehicles and amphibious vehicles are a consideration. Assault shipping for a reinforced infantry division for a short voyage, therefore, conforms to the pattern that table 2–16 depicts.

Table 2–15. Assault Shipping Requirements—Long Voyages

	1	2	3	4	5	6
1	Type of ship	Personnel	Vehicles	Number of ships	Total personnel	Total vehicles
2	LPA	1,500	50	6	9,200	300
3	LKA	200	150	15	3,000	2,250
4	LST	190	30	26	4,940	780
5	LSD	300	100	7	2,100	700
6	LPH	1,500	0	4	6,000	0
7	Total				25,040	4,030

3. The LPA carry large numbers of personnel but few vehicles. A large vehicle requirement or an increased use of landing vehicles, tracked (LVT), and helicopters in the ship-to-shore movement generally will increase the use of LKA-; LST-; landing ship, dock (LSD)-; and landing platform, helicopter (LPH)-type ships in the amphibious assault, with a resultant decrease in the number of LPA-type ships.

4. Available shipping always affects the composition of assault shipping. Efficient loading and allowable overloads likewise affect the number of personnel and vehicles that can be loaded. For example, it was common in both Europe and the Pacific in World War II to load 500 troops on LST.

(*e*) *Vehicles and supply.* In loading assault craft, vehicles or supplies may be substituted for

men on the basis of space or weight, whichever is the determining factor in each case. The boat space occupied by one man and his individual equipment normally is 240 pounds, 13.5 cubic feet, or 3 square feet.

(4) *Logistics.* The logistic plan for an amphibious operation must complement and implement the scheme of maneuver ashore.

c. River Crossings.

(1) *Bridges.* In an assault on a river line, the number of bridges provided for each tactical unit will vary, depending on such factors as width of river, stream velocity, available road net, trafficability of the soil, types and amounts of equipment available, and number of available engineer troops. Generally, at least two floating bridges to take division loads will be necessary in the zone of each assault division. Normally, one additional bridge per corps zone and at least one in the field army zone will supplement these bridges. TASCOM troops ordinarily will provide a railroad bridge in the zone of each field army.

(2) *Ferries.* Besides the foreging factors, the number of bridges planned and the extent of landing craft and amphibious vehicles employed will affect the numbers and types of ferries to use. For narrow streams, the construction of a bridge at each available site is frequently more economical than using ferries. On the other hand, in crossing a wide river when the construction of bridges will be delayed, troops will use ferries of all types to the greatest extent.

(3) *Detailed characteristics of assault boats, bridging, and ferry equipment.* See paragraphs 3–10 and 3–11.

Table 2–16. Assault Shipping Requirements—Short Voyages

	1	2	3	4	5	6
1	Type of ship	Personnel	Vehicles	Number of ships	Total personnel	Total vehicles
2	LPA	1,500	50	3	4,500	150
3	LKA	200	150	6	1,200	900
4	LST	190	30	45	8,550	1,350
5	LSD	300	100	16	4,800	1,600
6	LPH	1,500	0	4	6,000	0
7	Total				25,050	4,000

Section III. INTELLIGENCE—MAPPING, AIRPHOTOGRAPHY, AND GEOGRAPHICAL FACTORS

2–15. Intelligence

The MI organization provides intelligence specialist support to major commanders from division to theater army levels to assist in the collection and production of intelligence. The MI organization includes trained MI, counterintelligence, and area intelligence personnel, along with necessary administrative and technical personnel. For detailed data concerning organizational concept and intelligence planning, see FM 30–5, FM 30–9, FM 101–10–3, and TOE 30–25. Special intelligence units and detachments (MI organization) are presented in table 1–3.

2–16. Mapping and Airphotography

a. Mapping and airphotography are intelligence items. Succeeding paragraphs in this secton provide basic data on responsibilities and factors for estimating various logistic needs in connection with these items. This information is for general planning only. The specific problem of providing map support for an operation should be coordinated with the engineer of the planning echelon.

b. Functions and responsibilities pertaining to mapping and air-photography are given in AR 115–11.

2–17. Types and Scales of Military Maps

a. Types.

(1) *Planimetric map*—A map that presents only the horizontal positions of the features represented.

(2) *Topographic map*—A map that presents the horizontal and vertical positions of the features represented.

(3) *Plastic relief map*—A topographic map printed on plastic and molded into three-dimensional form.

(4) *Photomap*—A single photograph or a mosaic on which gridlines, marginal data, place names, and boundaries are added and which, in some instances, depicts relief graphically.

(5) *Pictomap*—A topographic map in which the photographic imagery of a standard mosaic has been converted into interpretable colors and symbols by means of a pictomap process.

(6) *Plastic relief photomap*—a photomap printed on plastic and molded into three-dimensional form.

(7) *Military city map*—A large-scale topographic map (usually 1:12,500) of a town or city.

(8) *Special maps*—Maps designed for special

purpose, e.g., trafficability maps, transportation maps, and boundary maps.

(9) *Terrain model*—A three-dimensional representation of an area, modeled in plaster, sponge rubber, or other materials. It is distinguished from other types of maps in that some cultural and terrain features are shown in realistic model form rather than by topographic symbol.

(10) *Photomosaic*—Assembly of airphotographs to form a composite picture.

(11) *Orthophotomap*—A photomap made from an assembly of orthophotographs. It may incorporate special cartographic treatment, photographic edge enhancement, color separation, or a combination of these.

b. Scales.

(1) Small-scale military maps are available in scales of 1:40,000,000, 1:10,000,000, 1:5,000,000, and 1:1,000,000. These scales of maps are needed for general planning and for strategic studies by commanders of large units.

(2) Medium-scale military maps are available in scales of 1:500,000 and 1:250,000. These scales of maps are required for planning operations, including movements and concentrations of troops and supplies. They are used as detailed planning maps, as graphics to illustrate briefings, as bases for medium-scale plastic relief maps, as roadmaps, and for phases of close air-ground support. When no larger scales are available, they are used as tactical maps and to assist field artillery in fire control.

(3) Large-scale military maps are available in 1:50,000 scale. This scale of map is intended to meet the tactical, technical, and administrative needs of field units.

2–18. Requirements for Maps

a. General. To calculate quantities of maps required for an operation, the following must be determined:

(1) The number of sheets of each map scale (i.e., the area coverage required at each scale). Data must be obtained from map indexes of the area concerned.

(2) The number of copies of each sheet required for initial issue. Data are in *b* below.

(3) The number of copies of each sheet required for replenishment issues. Data are in *c* below.

(4) The total copies of each scale required. This total equals sheets x initial copies + replenishment.

b. Copies for Initial Issue.

(1) *Guides for estimating quantities.*

(*a*) *General.* Small- and medium-scale maps (other than roadmaps) and aeronautical charts are issued in small quantities only to headquarters. Army aircraft also use 1:250,000-scale joint operation graphic-ground-air (JOB–G and JOG–A) maps or both, issued one per aircraft. The basis of issue is the unit headquarters, and quantities vary in proportion to the size of the unit. Basic figures for headquarters map allowances are given in table 2–17.

(*b*) *Large-scale maps.*

1. General. Bases used in computing allowances of scale maps vary with the type of the unit. The company is the basic unit for computing large-scale map requirements. Headquarters and service companies use the same basis as other companies. Allowances for unit headquarters are given in table 2–17.In addition, an allowance of one copy per organic Army aircraft is made.

2. Armored and infantry (mechanized) units. Allowances for armored and infantry (mechanized) units are on the basis of two copies per platoon plus an additional allowance of one per tank and carriage and two per armored personnel carrier.

3. Infantry and combat engineer units. Allowances for infantry and combat engineer units are on the basis of two copies per platoon. The basis of issue for small-unit operations is one copy per squad.

4. Airmobile and airborne units. Allowances are the same as for equivalent ground troops.

5. Field artillery units. Allowances for headquarters and service batteries are the same as for infantry units. Allowances for firing batteries are on the basis of one per section plus two per forward observer and liaison officer.

6. Air defense artillery units. Allowances for air defense artillery automatic weapon units and forward area missile units are on the basis of one per fire unit and two per headquarters. Allowances for other air defense artillery missile units are on the basis of one per officer.

7. Other units. Map requirements for other units are on the basis of one per officer and one per reconnaissance noncommissioned officer.

(*c*) *Roadmaps.* Roadmaps are issued one per vehicle and in limited quantities to unit headquarters.

(*d*) *Aeronautical charts.* Besides the headquarters allowances, aeronautical charts are is-

sued on a basis of one per organic Army aircraft and one per air defense artillery fire unit.

(*e*) *Photomaps.* Photomaps are issued as substitutes for large-scale maps when the latter are not available. When necessary as supplements to topographic maps, photomaps are issued in quantities not exceeding those authorized for topographic maps.

(*f*) *Pictomap supplement.* Pictomap supplements have the same basis of issue as photomaps.

(*g*) *Hydrographic charts.* Hydrographic charts are issued to units and headquarters as required by the situation and the mission of the unit.

(*h*) *Headquarters.* Besides the guides stated above, table 2–17 indicates the number of copies of each sheet needed by unit headquarters.

(2) *Summary of totals.* Table 2–18 gives the number of copies of each different sheet for initial issue for average operations and includes a small reserve to be held under unit control.

c. Replenishment Requirements. The field army requires under its control (besides the initial issue) in field army map depots 100 percent of the initial requirements of maps of all three scales. Replenishment—

Field army 180,000 sheets per day -- 9 tons

d. Overall Planning Factors. Initial issue—

Field army 2,700,000 sheets ---- 135 tons
Corps 420,000 sheets ---------- 21 tons

(Republic of Vietnam experience indicates values 70 percent higher for initial issues per corps.)

e. Map Coverage. Table 2–19 shows map coverage arranged by scale of map.

f. A Type of Planning Procedure. The field army G2 confers with the G3 to determine the types and scales of maps to be used by subordinate units and field army headquarters. An operational map is selected for use by field army and corps headquarters so that all orders, overlays, and references will be based on the same map. The field army engineer attends these staff conferences to advise on the availability of maps in field

Table 2–17. Headquarters Map Allowances

1	1 Unit	2 Small-scale maps	3 Medium-scale maps	4 Large-scale maps	5 Roadmaps	6 Aeronautical charts [a]	7 Plastic relief maps
2	Field army HQ	25	75	50	75	50	
3	Corps HQ	15	40	75	50	25	One per
4	Div HQ	5	25	55	50	10	general
5	Bde HQ	1	7	14 [b]	15	3	officer.
6	Bn HQ	0	3	12 [b]	5	0	
7	Co HQ	0	1	(c)	1	0	

[a] Add 1 per organic aircraft.
[b] Bde and bn needs for service units are 50 percent of those for combat units.
[c] 50 percent of the needs for combat co in (*b*) above, or 1 copy per co, whose needs are based on officer strength.

Table 2–18. Summary of Map Totals

1	1 Unit	2 Small-scale maps [a]	3 Medium-scale maps [a]	4 Large-scale maps [a]	5 Roadmaps	6 Aeronautical charts [b]
2	Fld army HQ and all fld army nondivisional troops	50	600	1,500	4,500	200
3	Corps HQ and all corps nondivisional troops	40	600	1,500	3,000	100
4	Inf div	25	250	1,190	2,750	150
5	Inf div (mech)	8	200	1,650	3,650	150
6	Armd div	8	200	1,650	3,650	150
7	Abn div	8	150	[c] 1,000	2,100	140

[a] Number of plastic relief maps not included.
[b] Production and distribution are USAF responsibilities. Normally, USAF distribution to troops is in bulk to CONUS and TASCOM map depots; the engineer makes detailed distribution.
[c] 1,500 for airborne operations.

*Table 2-19. Ground Map Coverage by Scale**

1	1 Scale	2 Km N-S	3 Km E-W	4 Sq km	5 1 cm-km (approx.)
2	1:1,000,000	444.5	512.0	228,000	10.1
3	1:250,000	112.5	160.9	18,100	2.5
4	1:100,000	56.3	40.2	2,265	1.0
5	1:50,000	27.3	22.5	615	0.5
6	1:25,000	13.7	10.5	142	0.3

*Average figures are given for approximately 40° north latitude. The figures increase toward the Equator and decrease toward the poles.

army and base map depots, capacity of reproduction facilities, and types and scales that can be most readily reproduced. The G3 outlines the area for which map coverage is desired. This area will be well in advance of the present friendly forward dispositions of the field army because of the time required for procurement, production, reproduction, and distribution of maps. Additionally, maps of the future area of operations are required early for planning purposes. The G3 also outlines tentative future dispositions, direction of attack, and boundaries of field army and subordinate units. The engineer uses this tentative information in determining map requirements for the field army. The procedure is as follows:

(1) Lay out the projected field army area for which coverage is desired on the pertinent index map.

(2) In the field army area outlined on the index map, lay out the tentative corps and division boundaries. Project these boundaries to cover the entire area for which map coverage is desired. While these projected boundaries will change during the campaign, divisions and corps of the field army will operate in the area. Therefore, calculations based on one pattern of operations are valid for map procurement purposes.

(3) List the units requiring each map sheet. Divisions in reserve will require map sheets of the entire front in which they may be employed.

(4) List the identifying numbers of the map sheets required to cover the area included within the field army boundaries, including sheets bordering closely on the boundaries.

(5) Determine the number of copies of each sheet required at each echelon, using factors presented herein or developed from experience factors.

(6) List the total number of copies of each map sheet required. These are planning figures for initial issue. To satisfy replenishment requirements, the total number of copies of each sheet that must be procured is double the initial issue (*c* above). These map sheets are procured from higher echelon or produced by topographic units in the field army.

2-19. Production of Maps

a. General Production Factors.

(1) Map requirements are estimated well in advance of an operation. Requirements in excess of the production capability of theater topographic units are requisitioned from the CONUS.

(2) Press size ____ 22½ by 30 (or 29) inches.

(3) Impressions per press-day __ 25,000 (bulk work only, two 10-hour shifts).

(4) Average map paper consumption per field army __ 5,000 reams per month; 167 reams per day.

(5) Maximum map paper consumption per field army __ 500 reams per day.

(6) Photomap paper consumption per field army _____ 1,000 reams per month.

(7) Recommended number of colors or press impressions:

Maximum ____ 8
Standard _____ 5 (black, brown, blue, green and red)
Expedient ____ 1, 2, 3
Supplements __ 1-8

Two- and three-color maps are superior in readability to one-color maps and should be adopted when time for standard color reproduction is not available. Characteristics of map paper are given in table 2-20. Map storage is covered in paragraph 5-29*c*.

b. Production Capacity Required.

(1) *Field army.* Three million impressions per month (two 10-hour shifts per day).

(2) *Theater army* (one base topographic battalion for each three field armies supported).

(*a*) Five million impressions per month for each three field armies supported.

(b) A new mapping capacity of 256 square kilometers per day.

2-20. Distribution of Maps

a. General. Several factors establish maps as a peculiar supply item that must be handled separately through a system set up exclusively for this purpose. The special factors that place map distribution in a class by itself are as follows:

(1) Security. Bulk production, movement, and issuance of maps are accurate indexes of the scope of forthcoming operations.

(2) Transitory application. Changes revealed by constantly expanding sources of information may quickly render maps obsolete and require several improved editions or issues in the course of a single operation.

(3) Relationship to the operation. Unlike other supply items, maps have a direct relationship to the exact place in which the operation is to occur.

(4) Phasing of supply. In general, bulk stocks of maps cannot be prepared nor can distribution be planned far in advance. However, collection of source material for map production must be constant and worldwide. Production must be phased to insure the application of the last bit of terrain information that can be safely used. Issue can be made only after an exact assignment of missions has been made.

b. Responsibility.

(1) The engineer computes map requirements for a command under the staff supervision of the G2. Requisitions are prepared and submitted through engineer channels in time to permit reproduction and shipment of the maps required.

Table 2-20. Characteristics of Map Paper

1	1	2	3
	Sheet size (in.)	Line map—high wet strength (lb per 1,000 sheets)[1] [2]	Photomap—coated two sides (lb per 1,000 sheets)[2]
2	22½ by 29	99	113
3	22 by 29	94	108
4	24 by 34	121	131
5	26 by 32	123	141
6	28 by 50	208	236
7	35 by 45	231	265
8	Thickness, 1,000 sheets	4 in.	3.5 in.

[1] For U.S. hydrographic charts, use twice the weights shown.
[2] Weights vary from those indicated ±5 percent.

(2) Engineers of corps and larger units distribute military maps in the field, except those maps with a security classification, which may require special handling. The supply and transport battalion of the DISCOM distributes maps in divisions. Maps not printed within an echelon are obtained from the engineer of the next higher unit.

c. Depots.

(1) *Peacetime and CONUS.* Distribution of maps during peacetime and for the CONUS is made by requisitions drawn on the theater or the Army Topographic Command through channels prescribed by the Chief of Engineers.

(2) *Wartime theater of operations.*

(a) The Army Topographic Command in the theater of operations establishes map supply depots, which, in turn, establish map supply points. The map supply depots serve both the map supply points and field army map depots. The map supply points serve COMMZ units.

(b) Field army map depots receive and store bulk stocks from the map supply depot and, in turn, supply maps to the field army support command (FASCOM) and other field army units and to corps map depots. One advance map depot is allocated to the field army, with a minimum floor space of 930 square meters.

(c) The corps map depots receive and store bulk stocks from the field army map depot and supply maps to corps units and to DISCOM.

(d) Operation of the division map store is the responsibility of the DISCOM commander. The only functions performed are to receive bulk stocks, to distribute maps to divisional units, and to store the division reserve map stocks.

d. Labor Estimates. Map depot labor may be estimated at 20 man-hours per 10,000 maps issued, including rolling, coding, packing, and collating unit packages.

e. Flow Chart for Topographic Products. Figure 2-9 portrays the normal flow of topographic products.

2-21. Terrain Models and Plastic Relief Maps

The determination of quantity requirements and the issuance of terrain models and plastic relief maps are matters for staff control. Terrain models and plastic relief maps are seldom stocked outside base plants. The Army Topographic Command is currently the only base plant for terrain models, and it stocks plastic relief maps at scales of

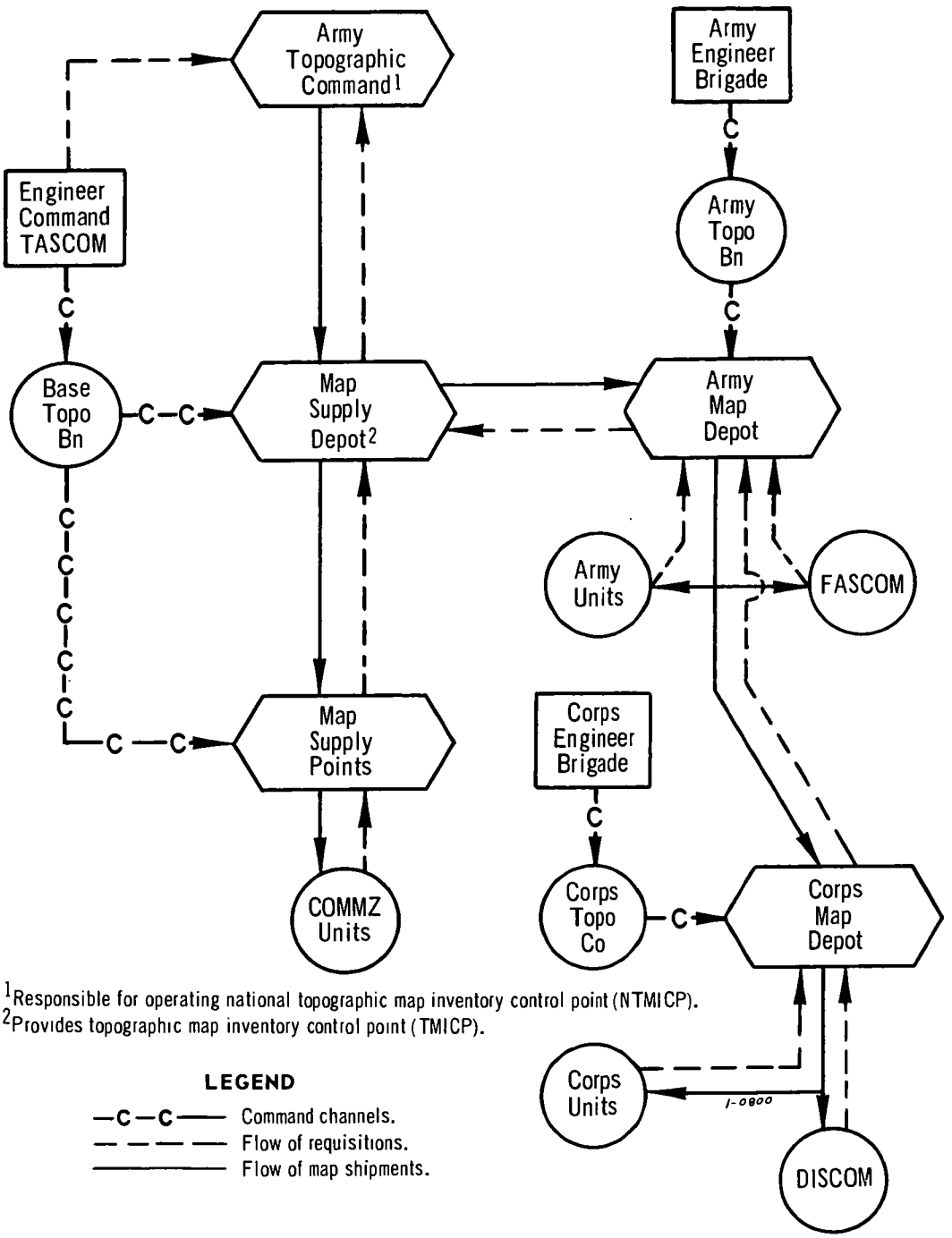

Figure 2-9. Flow chart, topographic products.

1:250,000, 1:1,000,000, and certain miscellaneous scales. These maps can be requisitioned through engineer channels. Quantity requirements depend solely on the estimate of the military situation. The necessary provisions to meet these requirements are determined by staff studies of combat needs. The resultant production and supply of models and plastic relief maps are determined by command decision. The commander having model-making units under his control directs that a G2 intelligence study and an engineer technical appraisal be performed to determine which models are to be constructed. When assigned modelmaking capacities are inadequate, the commander submits appropriate requests to higher headquarters. On completion of construction, the model is issued immediately and directly to the headquarters or command for which it was produced.

2–22. Gazetteers

a. Gazetteers (place-name indexes) are issued only to higher headquarters. Initial allowances per medium-scale map series are as follows:

Theater headquarters	25
Theater army headquarters	25
Army group headquarters	10
Field army headquarters	5
Corps headquarters	2
Division headquarters	2

b. Production, storage. and distribution of gazetteers are identical with mapping responsibilities: in the CONUS, the Corps of Engineers is responsible; in a theater of operations, the theater army engineer is responsible.

2–23. Trig Lists

a. General. A trig list is a list published by certain Army units that includes essential information of accurately located survey points. The respective elevations, descriptions, and other pertinent information for these ground control points appear within the limits of a map or maps of a certain series to which they are keyed. The horizontal positions generally are arranged by increasing northings on the map sheet so that the user can locate quickly any point of a given map sheet of a series. The vertical stations (bench marks) along the lines of spirit leveling usually are arranged consecutively along the route of the leveling survey.

b. Bulk Stocks of Trig Lists. Trig lists normally are provided in bulk at echelons from army group to divisions.

c. Number of Trig Lists at Each Map Scale. The scale of the map sheet to which each trig list is keyed and the number of map sheets covered by a particular trig list vary from country to country because of density and distribution of the geodetic control. Therefore, it is necessary to determine the number of map sheets covering the specific area and to realte this information to the *Trig List Catalog*, from which the scale and number of map sheets covered per trig list can be determined. A trig list key number appears in the *Trig List Catalog* and on the cover of each trig list. For identification and logistic reference, the trig list key number is used.

(1) *Field army area coverage.* The number of different trig lists required per field army can be determined on the same basis as for maps.

(2) *Division and smaller unit area coverage.* The number of trig lists required to cover an average area of operations can be determined on the same basis as for maps.

d. Guides for Estimating Quantities of Trig Lists Required for Initial Issue.

(1) Trig lists should be distributed to only those units having a requirement for geodetic data (i.e., staff engineers, engineer topographic units, artillery units, missile units).

(2) Besides the guides stated in (1) above, the following quantities are needed by units indicated:

Note. In most foreign countries, trig lists are CONFIDENTIAL.

	Unit	*Number of trig lists*	
(*a*)	Army group:		
	Army group engineer	1	
	Survey liaison detachment	1	
(*b*)	Field army:		
	Field army engineer	1	
	Engineer bn (army) (topo)	2	
(*c*)	Corps:		
	Corps engineer	1	
	Engineer co (corps) (topo)	2	
	Corps artillery	10	
	Weapon bn	1	
(*d*)	Armored division:		
	Division artillery	14	
	HHB	(3)	
	FA bn, 155-mm (SP)	(6)	(2 per bn)
	FA bn, 203-mm (SP)	(3)	
	FA bn, HJ	(2)	
	Division engineer	1	
(*e*)	Infantry division:		
	Division artillery	14	
	HHB	(3)	
	FA, 105–mm (towed)	(6)	(2 per bn)
	FA bn, 155-mm (towed)/ 203 mm (SP)	(3)	
	FA bn, HJ	(2)	
	Division engineer	1	
(*f*)	Infantry division (mechanized):		
	Division artillery	14	
	HHB	(3)	
	FA bn, 155-mm (SP)	(6)	(2 per bn)
	FA bn, 203-mm SP)	(3)	
	FA bn, HJ	(2)	
	Division engineer	1	
(*g*)	Airborne division:		
	Division artillery	8	
	HHB	(2)	
	FA bn, 105-mm (towed)	(6)	(2 per bn)
	Division Engineer	1	
(*h*)	Airmobile division:		
	Division artillery	10	
	HHB	(2)	
	Avn btry	(1)	
	FA bn, 105-mm (towed)	(6)	(2 per bn)
	FA bn, aerial FA	(1)	
	Division engineer	1	

(*i*) US Army missile command. Quantities are determined by the mission.

e. Production of Trig Lists.

(1) *Responsibilities.* Compilation and printing of trig lists normally are accomplished by the Army Topographic Command (CONUS) and all military topographic units (theater of operations) having the geodetic data and survey results necessary to compile field sketches for each station, to prepare bilingual descriptions, and to compute necessary coordinate systems required for the area. Trig lists produced in the CONUS are considered adequate reproduction material and can be reproduced in the theater of operations by military topographic units.

(2) *Format.* Trig lists normally are bound publications of ¼- to ½-inch thickness, with a trim size of 9 by 11 inches, and are printed on map stock, high wet-strength paper. However, this format may vary in the field.

2-24. Types and Categories—Airphotographic Imagery

a. Types of Permanent Record Imagery. Permanent record imagery can be obtained through the use of conventional photographic cameras, infrared (IR) sensor devices, and radar.

(1) *Classification of conventional photography.* Conventional photography is classified by the camera position and the area of coverage.

(*a*) Classification by camera position is as follows:

1. Vertical—Coverage of a target with photography taken from directly overhead. It provides photography of relatively constant scale and allows the interpreter to get the best stereocoverage and most accurate measurements.

2. Oblique—Coverage of a target area with photography taken at an angle from the vertical. Oblique photography presents a view of the target area similar to the view that the pilot has while he files toward or parallel to the area. Oblique photography closely resembles the normal eye view and allows an interpreter to "see" into an area in a normal manner rather than to see the target as it appears from directly overhead. High-oblique photography includes a portion of the skyline behind the target area; low-oblique photography does not. Oblique photography taken with an 80-percent overlap between frames allows stereocoverage.

3. Panoramic—Coverage by a special camera that scans across a wide area of the terrain, usually from horizon to horizon. Panoramic photography provides rapid coverage of large areas of terrain on both sides of an aircraft's line of flight in only one pass over the target area.

(*b*) Classification by area of coverage is as follows:

1. Pinpoint—Coverage of a single point, feature, individual target, or small area of terrain by a small number of photographs. A minimum of 60-percent overlap between individual photoframes is necessary to insure stereocoverage.

2. Strip—A continuous series of overlapping photographs taken in a single flight line that covers a lengthy target or a large area of terrain.

3. Continuous strip—A single strip of photography that contains an unbroken image throughout the length of the flight line. This type of photography requires a special camera and eliminates the need for individual photoframes with overlap throughout the length of the strip.

4. Area—Two or more strips of photography that overlap to the side. A minimum of 30-percent sidelap between strips, besides the 60-percent overlap between frames, is necessary to provide stereocoverage throughout the area. The main use of area photography is in planning or for comparing coverage by inspection with other imagery available. Area photography with the proper overlap and sidelap can be used to make photomosaics. Normally, area photography is vertical photography.

5. Mapping—Mapping or charting photography taken for the purpose of preparing or revising maps and charts. Usually, it is taken at much smaller scales than intelligence photography and should be used for intelligence purposes only when no other intelligence photography is available. This photography is taken with special stabilized cameras and other equipment, and the flight pattern and evaluation of the aircraft are carefully controlled.

(2) *IR imagery.* AN IR system is a passive sensor that detects emitted and reflected thermal radiation coming from the terrain and objects on the terrain. Current IR systems filter out reflected radiation and record only the radiation emitted by the object. The total emitted radiation is a function of an object's temperature and its emissivity. Emitted radiation differs between objects, and the resultant differences are sensed and recorded by the IR system. The IR sensor can detect minute differences and thus differentiate objects close to

one another. To achieve the maximum capability, the IR system must operate at low altitude, and its scan coverage is limited to the area directly below the flightpath of the aircraft. Therefore, it normally is used only for point, linear, or small area targets.

(3) *Side-looking airborne radar.* Side-looking airborne radar (SLAR) is an active electronic device that emits energy and senses that portion of the emitted energy which is returned by reflection off the terrain and objects thereon. The radar's energy may be directed at the terrain to the left, right, or both sides simultaneously along the flightpath of the aircraft. The energy reflected from both fixed and moving objects on the ground is recorded on strips of film. Since the radar pulse is line of sight, any high ground or tall objects in the path of the radar pulse block out radar returns from any smaller objects they mask. This causes SLAR returns to leave blank spots, called radar shadow, wherever these hidden areas occur.

b. Categories of Permanent Record Imagery. The three categories of permanent record imagery commonly used by the imagery interpreter are initial record, general intelligence record, and detailed intelligence record. The availability of improved imagery interpretation equipment in the tactical imagery interpretation facility allows the usable scales of photography to be increased in each category as indicated in (1) through (3) below.

(1) *Initial record.* Initial record is complete, permanent imagery coverage—usually flown seasonally—of a projected or actual area of operations generally extending from the line of contact with enemy ground forces to deep within enemy territory. Photographic coverage normally is of small scale (1:20,000 to 1:60,000) and suitable for stereoscopic study. Initial record provides basic information about enemy installations and defenses, cultural features, trafficability, soil, and vegetation. Its principal purpose is to provide a basis for evaluating changes in enemy-held territory. Areas subject to seasonal changes are recorded under conditions characteristic of each season to eliminate the observed differences caused by seasonal variations. Vertical initial record may serve as a map substitute or supplement. The field army normally supervises the automatic initial distribution to subordinate units according to areas of interest and makes supplementary issues as necessary.

(2) *General intelligence record.* General intelligence record is vertical medium-scale (1:10,000 to 1:20,000) imagery coverage in the field army area of interest. It provides current intelligence information and is compared with initial record imagery to determine current location and disposition of enemy installations, troop concentrations, troop movements, equipment, and supplies. Normally, this type of imagery is requested by division and higher headquarters.

(3) *Detailed intelligence record.* Detailed intelligence record supplements the general intelligence record by providing large-scale imagery of areas of specific interest. It provides the imagery for detailed analysis of specific enemy activity, selected terrain features, installations, or equipment. It is frequently necessary to use more than one sensing or recording system over the target. Types of detailed analysis are shown in (*a*) through (*d*) below.

(*a*) *Vertical.* The study of large-scale (1:10,000 and larger) photography reveals the plans and heights of installations not shown in the general intelligence record.

(*b*) *Oblique.* The study of airphotographs taken at an angle from the vertical reveals installations from the elevation standpoint. This type of imagery is particularly important in the analysis of features not suitable for vertical analysis, such as concealed or well-camouflaged installations.

(*c*) *Concealment.* Installations and equipment hidden from observation may be detected and subjected to study by special recording techniques; for example, a camouflage net located through general intelligence record imagery may be identified as a covering for mechanical equipment when the area is subjected to IR search.

(*d*) *Deception.* Enemy measures designed to deceive and confuse friendly intelligence collection agencies may be detected through analysis and comparison of photographic and electronic presentations (e.g., radar, IR, and electronic intelligence) collected at or near the same time.

2–25. Requirements for Airphotography

a. An initial issue of basic cover is made to field army units according to their requirements. Supplemental issues are made as required during the progress of the campaign. A type of initial issue of basic cover is shown in table 2–21.

b. Detailed planning data for determining the number of airphotographs required to cover a given area are in TM 30–245. For general plan-

Table 2-21. Type of Initial Issue of Basic Cover—Airphotographs

1	2	3	4	5	6	7
			Number of 9- by 9-inch photographs		Total (approx lb)	
1 Unit or agency	Number of sets	Depth into enemy territory (km)	1:25,000	1:10,000	1:25,000	1:10,000
2 Theater army, base topo bn	2 sets theater army area	480	40,000	248,000	1,332	8,266.
3 Fld army G2 (MI bn, air recon spt, fld army).	(Based on 160-km width) 2 sets fld army zone sector.	480	20,000	124,000	666	4,133.
4 Fld army topo bn	(Based on 160-km width) 1 set fld army zone sector.	480	10,000	62,000	333	2,066.
5 Fld army G2 (imagery intpr sec)	(Based on 160-km width) 1 set fld army zone sector.	480	10,000	62,000	333	2,066.
6 Corps G2 (imagery intpr sec)	(Based on 55-km width) 1 set corps zone/sector.	160	1,200 each corps	7,175 each corps	40 each corps	240 each corps.
7 Corps topo co	(Based on 55-km width) 1 set corps zone/sector.	160	1,200 each corps	7,175 each corps	40 each corps	240 each corps.
8 Corps arty	(Based on 55-km width) 1 set corps zone/sector.	160	1,200 each corps arty.	7,175 each corps arty.	40 each corps arty.	240 each corps arty.
9 Div G2 (imagery intpr sec)	(Based on 15-km width) 2 sets division zone/sector.	80	400 each div	2,110 each div	17 each div	140 each div.
10 Div arty	(Based on 15-km width) 1 set division zone/sector.	80	200 each div arty	1,055 each div arty.	7 each div arty	70 each div arty.

ning purposes, the minimum number of photographs required for stereoscopic coverage of an area at a desired scale can be determined by dividing the square meters of the area by the net gain per photograph. The minimum number of photographs should be increased by 20 percent to allow for overedge coverage. The net gain planning factors are as follows:

(1) For 9- by 18-inch photography—
Net gain = $1/40\ S^2$ (S= denominator of scale of desired photography)

(2) For 9- by 9-inch photography—
Net gain = $1/80^2$

Example:

Given: An area 8,000 meters by 12,000 meters to be photographed at a scale of 1:15,000.

Find: The number of 9- by 18-inch photograph required.

Solution: $$\frac{8{,}000 \times 12{,}000 \times 40}{5{,}000^2}$$

= 154 photographs minimum.

154 + 20 percent = 184 photographs minimum.

c. Table 2–22 may be used for initial rough estimates of airphotographic requirements.

2–26. Airphotographic Reproduction and Imagery Interpretation

Functions of two sections of the MI battalion, air reconnaissance support, field army (TOE 30–5G), are illustrated in tables 2–23 and 2–24. Data on the functions of two USAF photographic units are in table 2–25.

2–27. Expressing Time and Dates

a. Time. Time is expressed in a group of four digits, ranging from 0000 to 2400. The first two digits are the hours after midnight, and the remaining two digits indicate the minutes past the hour. When the hour can be expressed by a single digit, it is preceded by zero; for example, 0625 for 6:25 a.m. Correct official time is available at the nearest signal center.

b. Dates.

(1) The day, month, and year are expressed in that order, except when it is necessary to specify a six-digit time group and then the following order is used: the first two digits indicate the day of the month, the next two digits indicate the hour, and the last two digits indicate minutes past the hour.

Example: 070625 Dec 67 (6:25 a.m. 7 Dec 67). The day is expressed by numerals; the month is either spelled out or abbreviated. Abbreviations, if used, consist of the first three letters of the word. The year is expressed by four digits or by the last two digits.

Example: 14 January 1968; 14 Jan 68.

(2) When it is desired to keep dates secret, or to depict an undetermined date, the date may be expressed by the letter D plus (+) or minus (—)

Table 2–22. Total Airphotographic Requirements for a Field Army.

1	1 Area	2	3	4	5
		Coverage (scale 1:10,000)			
		Basic [1]		Tactical [2] (depth 25 km)	
		Photographs	Wt/lb	Photographs	Wt/lb
2	Field army zone/sector (based on 160-km width)	Depth 160 km 21,600	728	1,600	96
3	Corps zone/sector (based on 60-km width)	Depth 80 km 3,640	255	480	34
4	Division zone/sector (based on 15-km width)	Depth 40 km 1,560	108	160	11

[1] Based on issue table 2–21 above.
[2] Per set of photographs.

Table 2–23. Reproduction Section, MI Battalion, Air Reconnaissance Support, Field Army (TOE 30–5G)

	1	2	3
1	Remarks	Format sizes	Capabilities
2	Section reproduces and identifies air imagery obtained from tactical air force reconnaissance elements.	4½- by 4½-, 4½- by 10⅔-, 9- by 9-, and 9- by 18-inch photographic imagery.	Reproduction of duplicate positive, duplicate negative, and photographic prints of air imagery either by selected frame or continuous strips of all format sizes. Enlargement capability of 2 to 1 of 4½- by 4½-inch imagery. Packaging and identification of reproduced imagery for delivery.

Table 2–24. Imagery Interpretation Section, MI Battalion, Air Reconnaissance Support, Field Army (TOE 30–5G)

	1	2
1	Remarks	Capabilities
2	Prepares imagery interpretation reports, mosaics, and other interpretation of air imagery for the field army as required.	Plots and performs immediate interpretation of air IR, radar, and photographic imagery. Prepares and disseminates imagery interpretation reports on this imagery. Provides liaison with reconnaissance elements of the tactical air force that provides support to the field army; briefs and debriefs USAF pilots to secure information obtained form visual sightings.

Table 2–25. USAF Photographic Units

	1	2	3
1	Unit	Photographs furnished	Remarks
2	Reconnaissance wing (theater of operations).	Specialized photography needed by topographic units for photogrammetry and photography for strategic purposes beyond the scope of reconnaissance wings of tactical air commands and tactical air forces.	Wing may include mapping and charting squadrons. Mapping photography ordinarily not suitable for intelligence purposes because of small scale and lack of detail. May contain important information, however, and prints should be made available to MI officers for study.
3	Reconnaissance wings of tactical air commands and tactical air forces.	Photographs needed for intelligence or combat purposes (single photographs, vertical and oblique; stereopairs; or night photographs).	Also visual reconnaissance missions are capable of providing limited vertical and oblique photographs. Photographic missions capable of large quantities of high-altitude vertical and oblique photographs and, under extremely urgent circumstances, limited and low-altitude vertical and oblique photographs.

a numeral, e.g., "Assault elements depart for marshaling area on D–2."

c. Greenwich Mean Time. Communications between headquarters in different time zones usually are dated, and references to dates and times usually are made in Greenwich mean time. The standard time at Greenwich, England, is accepted as the basis for measuring time throughout the world. Local mean time can be changed to Greenwich mean time by adding or subtracting the appropriate number of hours as indicated in the time zone chart in figure 2–10. Greenwich mean time can be changed to local mean time by reversing the signs of the time zone chart. Appropriate adjustments must be made for daylight saving time.

d. Time Suffixes. Time groups expressing Greenwich mean time are designated by the letter suffiz Z immediately following the last digit of the group. For example, 190225Z indicates 2:25 a.m. on the 19th of the current month, Greenwich mean time. Any other suffix used after a four-digit time group (corresponding to the Z of Greenwich mean time) indicates the zone in which the local mean time is expressed. *It does not designate location on the earth's surface.* The proper suffix can be determined from the time zone chart and the time conversion chart in fig-

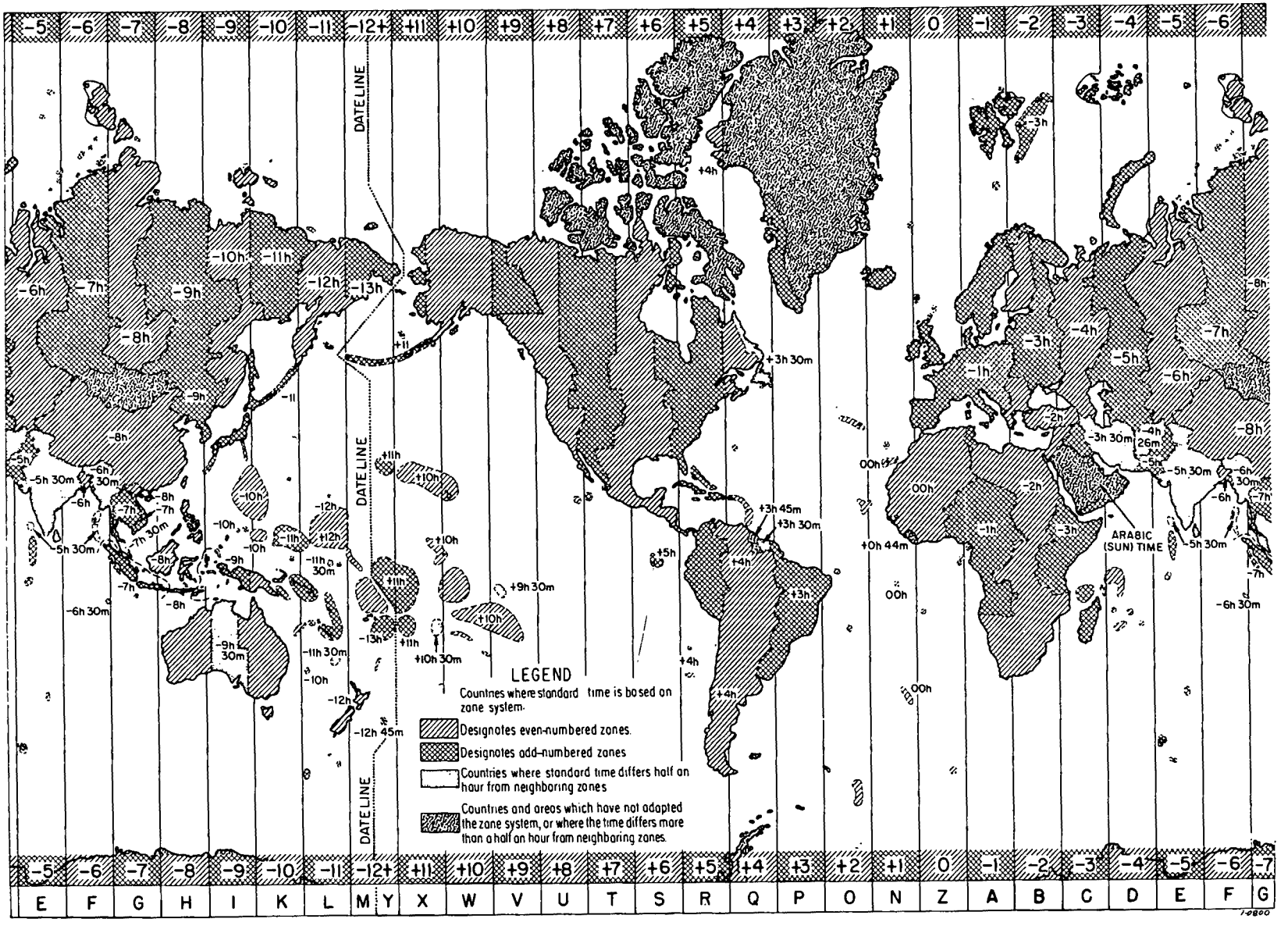

Figure 2–10. Time zone chart.

Previous day	1800	1900	2000	2100	2200	2300	2400	0100	0200	0300	0400	0500	0600	0700	0800	0900	1000	1100	1200	1300	1400	1500	1600	1700	1800	Same day
	1900	2000	2100	2200	2300	2400	0100	0200	0300	0400	0500	0600	0700	0800	0900	1000	1100	1200	1300	1400	1500	1600	1700	1800	1900	
	2000	2100	2200	2300	2400	0100	0200	0300	0400	0500	0600	0700	0800	0900	1000	1100	1200	1300	1400	1500	1600	1700	1800	1900	2000	
	2100	2200	2300	2400	0100	0200	0300	0400	0500	0600	0700	0800	0900	1000	1100	1200	1300	1400	1500	1600	1700	1800	1900	2000	2100	
	2200	2300	2400	0100	0200	0300	0400	0500	0600	0700	0800	0900	1000	1100	1200	1300	1400	1500	1600	1700	1800	1900	2000	2100	2200	
	2300	2400	0100	0200	0300	0400	0500	0600	0700	0800	0900	1000	1100	1200	1300	1400	1500	1600	1700	1800	1900	2000	2100	2200	2300	
	2400	0100	0200	0300	0400	0500	0600	0700	0800	0900	1000	1100	1200	1300	1400	1500	1600	1700	1800	1900	2000	2100	2200	2300	2400	
Same day	0100	0200	0300	0400	0500	0600	0700	0800	0900	1000	1100	1200	1300	1400	1500	1600	1700	1800	1900	2000	2100	2200	2300	2400	0100	Next day
	0200	0300	0400	0500	0600	0700	0800	0900	1000	1100	1200	1300	1400	1500	1600	1700	1800	1900	2000	2100	2200	2300	2400	0100	0200	
	0300	0400	0500	0600	0700	0800	0900	1000	1100	1200	1300	1400	1500	1600	1700	1800	1900	2000	2100	2200	2300	2400	0100	0200	0300	
	0400	0500	0600	0700	0800	0900	1000	1100	1200	1300	1400	1500	1600	1700	1800	1900	2000	2100	2200	2300	2400	0100	0200	0300	0400	
	0500	0600	0700	0800	0900	1000	1100	1200	1300	1400	1500	1600	1700	1800	1900	2000	2100	2200	2300	2400	0100	0200	0300	0400	0500	
	0600	0700	0800	0900	1000	1100	1200	1300	1400	1500	1600	1700	1800	1900	2000	2100	2200	2300	2400	0100	0200	0300	0400	0500	0600	
	0700	0800	0900	1000	1100	1200	1300	1400	1500	1600	1700	1800	1900	2000	2100	2200	2300	2400	0100	0200	0300	0400	0500	0600	0700	
	0800	0900	1000	1100	1200	1300	1400	1500	1600	1700	1800	1900	2000	2100	2200	2300	2400	0100	0200	0300	0400	0500	0600	0700	0800	
	0900	1000	1100	1200	1300	1400	1500	1600	1700	1800	1900	2000	2100	2200	2300	2400	0100	0200	0300	0400	0500	0600	0700	0800	0900	
	1000	1100	1200	1300	1400	1500	1600	1700	1800	1900	2000	2100	2200	2300	2400	0100	0200	0300	0400	0500	0600	0700	0800	0900	1000	
	1100	1200	1300	1400	1500	1600	1700	1800	1900	2000	2100	2200	2300	2400	0100	0200	0300	0400	0500	0600	0700	0800	0900	1000	1100	
	1200	1300	1400	1500	1600	1700	1800	1900	2000	2100	2200	2300	2400	0100	0200	0300	0400	0500	0600	0700	0800	0900	1000	1100	1200	
	1300	1400	1500	1600	1700	1800	1900	2000	2100	2200	2300	2400	0100	0200	0300	0400	0500	0600	0700	0800	0900	1000	1100	1200	1300	
	1400	1500	1600	1700	1800	1900	2000	2100	2200	2300	2400	0100	0200	0300	0400	0500	0600	0700	0800	0900	1000	1100	1200	1300	1400	
	1500	1600	1700	1800	1900	2000	2100	2200	2300	2400	0100	0200	0300	0400	0500	0600	0700	0800	0900	1000	1100	1200	1300	1400	1500	
	1600	1700	1800	1900	2000	2100	2200	2300	2400	0100	0200	0300	0400	0500	0600	0700	0800	0900	1000	1100	1200	1300	1400	1500	1600	
	1700	1800	1900	2000	2100	2200	2300	2400	0100	0200	0300	0400	0500	0600	0700	0800	0900	1000	1100	1200	1300	1400	1500	1600	1700	
	Y	X	W	V	U	T	S	R	Q	P	O	N	Z	A	B	C	D	E	F	G	H	I	K	L	M	
	+12	+11	+10	+9	+8	+7	+6	+5	+4	+3	+2	+1	0	−1	−2	−3	−4	−5	−6	−7	−8	−9	−10	−11	−12	

8-2857

Figure 2–11. Time zone conversion chart.

KAGOSHIMA—WAN, KYUSHU * DECEMBER 1945
Lat 31° 30′ N., Long 130° 40′ E. Time Meridian: 135° E.
Sunlight and Moonlight Data Computed for Lat 31° 30′ N., Long 130° 40′ E.

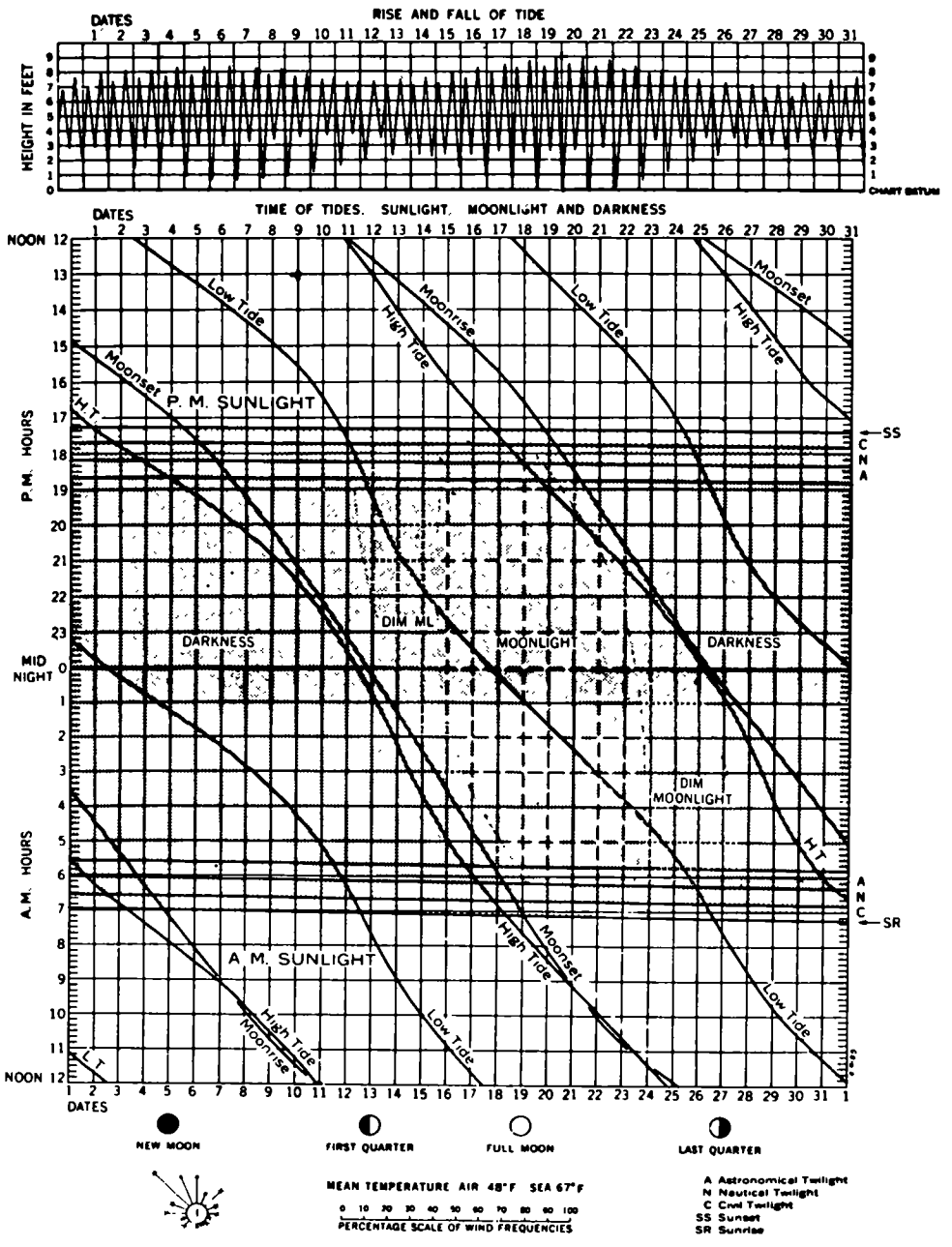

*This diagram, with the changes indicated, is also applicable to the following places:
TOMARI URA.—Add 10 minutes to times of high and low tides, subtract ½ foot from heights of high tides.
ODOMARI WAN.—Subtract 25 minutes from times of high and low tides, subtract 1 foot from heights of high tides.

Figure 2–12. Diagram of tides, sunlight, moonlight.

ures 2–10 and 2–11 respectively. For example, Kansas City is located in the sixth time zone west of Greenwich. If Kansas City keeps local mean time, the time group suffix will be S.

2–28. Expressing Natural Phenomena

a. General. Staff officers avoid the use of such indefinite terms as "first light," "last light," "daybreak." "daylight," "dusk," and "dawn." Terms of a definite nature, such as "beginning" or "ending of evening" or "morning nautical" or "civil twilight," are preferred. However, expressions of these times to lower units must be in clock time. "First light" and "last light," terms used by the

armed forces of the United Kingdom, include a slightly greater period of twilight than defined by civil twilight.

b. Published Data. For purposes of military planning and to facilitate staff work in expressing natural phenomena in time, theater commanders prepare and publish for the theater as a whole or for major geographical portions thereof daily time, surise, sunset, twilight, moon, and tide tables and specify the number of hours the local time differs from Greenwich mean time. A sample of the type of chart that should be prepared and issued for each major operation or operational area is shown in figure 2–12. These data are available through Army channels. Data on time of sunrise, sunset, morning and evening twilight, and moon phases can also be found in TM 5–236–(current year).

(1) *Datum.* The astronomical data are for sea level and will not vary more than 5 minutes for each degree of the difference in longitude from the standard meridian.

(2) *Time used.* The times on the diagram are for the time meridian indicated in the heading. When another time meridian is to be used in the field, change the figures representing hours on the left of the large diagram to conform to the new time. If the time meridian to be used is east of the one shown on the diagram, increase the figures by 1 hour for each 15°; if west, decrease the figures.

(3) *Dates.* In the upper diagram, each day from midnight to midnight is represented by a space between two lines. In the lower diagram, the days are represented by vertical lines covering the period from noon of one day to noon of the next. The dates at the bottom of the diagram differ from those at the top because the date changes in passing through midnight.

(4) *Tides.* The times of the high and low tides are shown by curves in the lower graph of the diagram in figure 2–12. By noting the sequence of the tides during a day, the height of any particular tide can be found from the upper graph of this diagram.

(5) *Moonlight.* For astronomical twilight and solar darkness, periods of moonlight and dim moonlight are shown on the lower diagram. During the period of moonlight, the intensity of light varies between the brightness of the full moon and one-third of this value. During the period of dim moonlight, the intensity varies from one-third to one-tenth of the brightness of full moon.

(6) *Moon's phases.* The phases of the moon are shown below the day on which they occur.

c. Twilights.

(1) Twilights (fig 2–13) are the periods of solar illumination before sunrise and after sunset. Both morning and evening twilights are divided into three periods: astronomical, nautical, and civil. The interval between the instant that the upper edge of the sun's disk appears on the horizon and the instant that the center of the sun is 6° below the horizon is civil twilight, 6°–12° nautical twilight, and 12°–18° astronomical twilight.

(2) Astronomical twilight affords such meager light that for military purposes it may be considered a period of darkness.

(3) Nautical twilight provides enough illumination to carry on most types of ground movement without difficulty and approaches conditions expected under full light of day. Vision is limited to 365 meters or less. For military purposes, during the nautical twilight periods weapons can be employed within the range of vision stated and daylight calculations relative to movement will apply, including restrictions on such movement. Bomb loading and repair work cannot be carried on without the use of artificial light.

(4) Civil twilight affords sufficient light to carry on normal day activities. This period is the earliest or latest that provides sufficient natural illumination of targets to allow efficient observed artillery fire or day bombing.

(5) Except for high latitudes, values for the approximate durations of astronomical, nautical, and civil twilights may be considered equal.

d. Effect of Weather on Light. Weather has been disregarded in the above considerations. Smudge, fog, clouds, refraction, reflection, and precipitation affect the degree of illumination. These factors can be included in the calculations by experience tables compiled in the area over a period of time and from meteorological forecasts for the area only.

2–29. The World Geographic Reference System

a. The World Geographic Reference System (GEOREF) is used in all joint air defense operations. Army air defense uses the GEOREF on early warning plotting boards and on plan position indicator screens and for reporting installation locations and target positions.

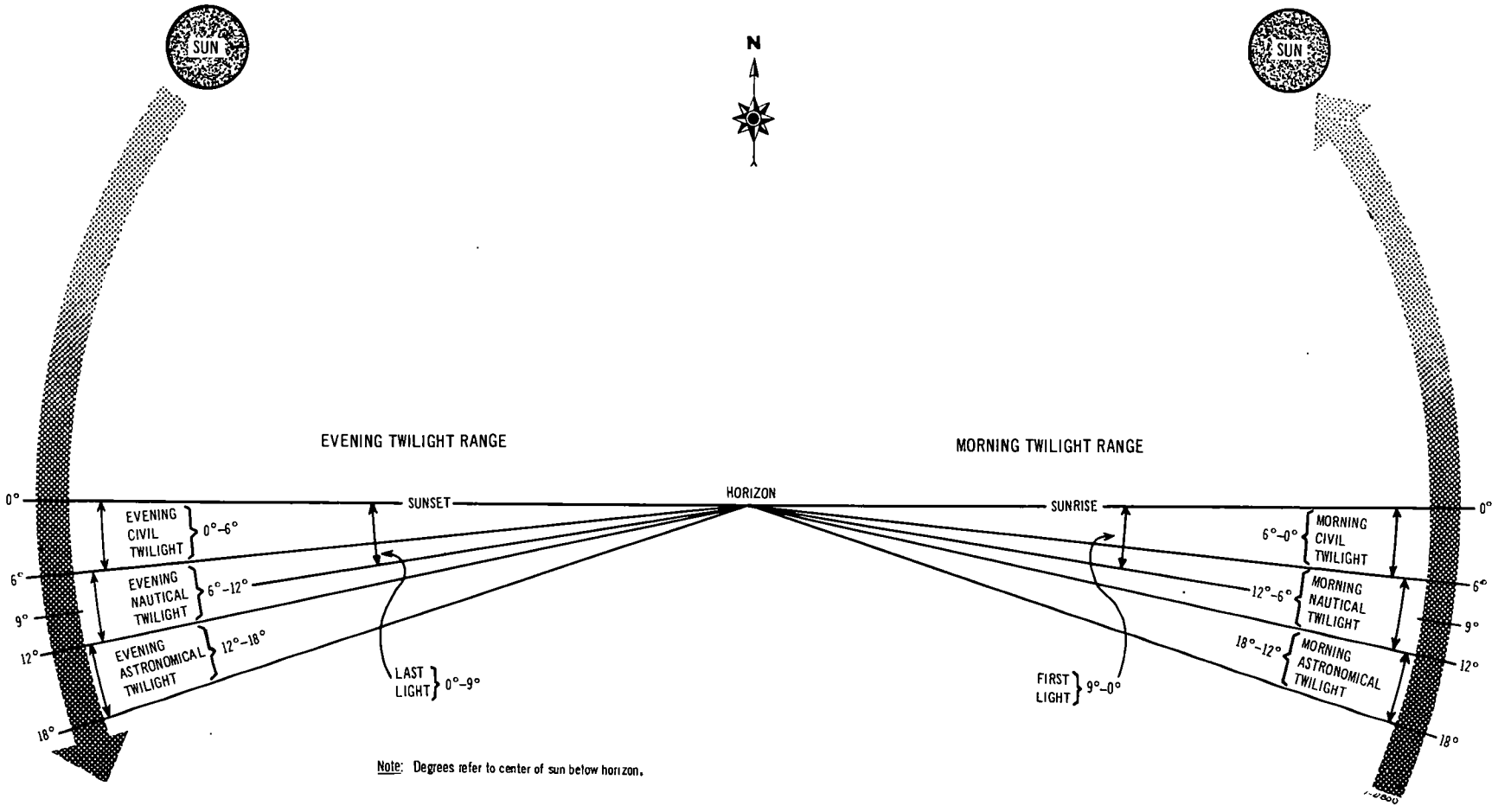

Figure 2–13. Twilight factors.

b. The GEOREF is a worldwide position reference system that may be applied to maps or charts graduated in latitude and longitude regardless of projection. It is a method of expressing latitude and longitude suitable for rapid reporting and plotting.

c. Mobile air defense units are required to report to higher headquarters any new position occupied in GEOREF coordinates.

d. A discussion of the GEOREF identification code is included in (1) through (7) below.

(1) The GEOREF system uses an identification code that is divided into three main divisions. The GEOREF designations are read by the same rule as military coordinates: right, then up. The complete GEOREF coordinate is expressed by combining the identification letters for the first and second divisions with the numbers identifying the third division.

(2) In a GEOREF coordinate designation, the first pair of letters identifies the first division, 15° quadrangles, within which a point is located. The first division (15° quadrangles) is subdivided into the second division, 1° quadrangles, which are identified by the second pair of letters. The second division (1° quadrangles) is further subdivided into the third division, 1′ quadrangles, which are identified by a pair of two-digit numerals.

(3) The first division quadrangles are constructed by dividing the surface of the earth into 24 longitudinal zones of 15° each and 12 lateral bands of 15° each. The 24 longitudinal zones, identified by the first letter of a GEOREF designation, are lettered A through Z (omitting I and O) eastward from the 180th meridian. The 12 bands of latitude, identified by the second letter, are lettered A through M (omitting I) northward from the South Pole.

(4) The second division quadrangles are constructed by subdividing each of the 15° quadrangles into 15 longitudinal zones of 1° east and west and 15 latitudinal bands of 1° north and south. The longitudinal zones, identified by the third letter of a GEOREF designation. are lettered west to east from A through Q (omitting I and O). Similarly, the latitudinal bands identified by the fourth letter, are lettered south to north from A through Q (omitting I and O).

(5) The third division quadrangles are constructed by subdividing each of the 1° quadrangles into 60 latitudinal zones of 1′ east and west and 60 latitudinal bands of 1′ north and south. The longitudinal zones, identified by the first pair of digits of the numerical portion of the GEOREF designation, are numbered west to east from 00 through 59. The latitudinal bands, identified by a second pair of numerals, are numbered south to north from 00 through 59. The numerical designation of the third division of the GEOREF expresses the location in minutes for points located north in latitude or east in longitude. For points located south in latitude or west in longitude, the location in minutes is rounded to the next higher minute, subtracted from 60, and recorded as the third division of the GEOREF.

(6) The manner of lettering and numbering does not vary whether the location is west or east of the prime meridian or north or south of the Equator. A third division quadrangle encompasses an area approximately 1 nautical mile at the Equator to zero at the poles.

(7) *Example:* The geographic coordinates of El Paso, Texas, are 31°48′06″ N and 106°25′48″ W. These coordinates are rounded off to 31°48′ N and 106°26′ W. The first division (15° quadrangle) is identified by the letters EJ; the second division (1° quadrangle) is identified by the letters PB; the third division (1′ quadrangle) is derived by subtracting 26 from 60 to record 34 for the GEOREF designation of the longitudinal zone, west longitude, and 48 for the latitudinal band, north latitude. Thus, the complete GEOREF coordinates are expressed EJPB3448.

FM 44-1-1 contains a more detailed description of this system.

Section IV. WEAPON CHARACTERISTICS

2–30. Characteristics of Weapons

a. The tables below provides the characteristics of weapons in the following categories:

(1) Vehicular weapons and primary combat vehicles (less artillery) (table 2–26).

(2) Infantry weapons (table 2–27).

(3) Field artillery cannons and rockets (table 2–28).

(4) Field artillery missiles (table 2–29).

(5) Field artillery final protective fires (table 2–30).

(6) Field artillery targets (table 2–31).

(7) Airmobile weapons/armament subsystems (table 2–32).

b. Definitions pertaining to characteristics of weapons are as follows:

(1) *Maximum range*—The greatest distance a weapon will fire without consideration of dispersion. It is estimated at 45° elevation for vehicular weapons.

(2) *Maximum rate of fire*—The greatest rate at which a well-trained crew can fire.

(3) *Sustained rate of fire*—The rate at which a weapon can fire indefinitely without seriously overheating.

(4) *Maximum effective rate of fire*—The rate at which a trained crew can fire and obtain a reasonable number of hits (50 percent).

(5) *Maximum effective range*—The maximum distance at which a weapon may be expected to deliver its destructive charge with the accuracy specified to inflict prescribed damage.

(6) *Maximum rate of fire in rounds per minute*—In table 2–27 only, this rate is based on a 3-minute period.

(7) *Time to emplace in minutes*—The time needed to enter a minimally prepared position and report "laid and ready to fire."

(8) *Field artillery final protective fire*—An immediately available prearranged barrier of fire designed to impede enemy movement across defensive lines or areas. Data in table 2–30 are approximate and will vary for different charges and terrain.

(9) *Effectively covered area*—That area in which there is at least a 50-percent chancé that a man standing will become a casualty. The area is roughly elliptical.

c. In table 2–32, line 6, the conservative maximum range corresponding to old rocket motors (more than 4 years old) is given. For newer rockets, the maximum range is 9,200 meters.

d. Characteristics of field artillery and air defense artillery weapons are in appropriate field artillery and air defense artillery manuals and in FM 101–10–3.

e. Nuclear effects data are in FM 101–31–2.

2–31. Characteristics of Chemical Agents and Munitions

Tables 2–33 and 2–34 provide data on characteristics of chemical agents and munitions respectively.

Table 2-26. Characteristics of Vehicular Weapons and Primary Combat Vehicles

1	1 LIN	2 Vehicle	3 Primary weapon	4 Rate of fire (rd per min)	5 Maximum range (m)	6 Effective range (m) Armor defeating	7 Effective range (m) Other targets	8 Approx bursting area (m)
2	D10725	Carr, 81-mm mort, SP	Mort, 81-mm	Normal—18 Max—30	HE—3,100 (approx) Illuminating—2,300 Smoke—2,450 (approx)			25 by 20 (A)
3	D10740	Carr, 107-mm mort, SP, full-tracked.	Mort, 107-mm	Normal—5 Max—20	HE—4,925 Cml—4,625 Illuminating—4,725			40 by 15 (A)
4	D11620	Carr, flamethrower, M132A1	Flamethrower, mech, main armt, APC-mtd, M10-8.	6.2 gal per sec	150-170			
5	J96819	Gun, 40-mm, SP, M42A1	Gun, 40-mm, M2A1.	240	HE-T Vert—4,650 Horiz—4,775		1,650 (aerial tgts)	
6	J96956	Gun, 90-mm, SP, full-tracked, M56.	Gun, 90-mm	NA	19,870	2,000—AP-T	4,600—HE 4,600—smoke	37 by 6 (HE)
7	V12826	Tk, cbt, full-tracked, 76-mm gun	Gun, 76-mm	NA	14,388	2,000—AP-5 2,000—HEAT	4,600—HE 4,600—smoke 185—canister	30 by 5 (HE)
8	V12963	Tk, cbt, full-tracked, 90-mm gun	Gun, 90-mm	NA	19,870	2,000—AP-T 2,000—HEAT	4,400—HE 4,400—smoke 185—canister	37 by 6 (HE)
9	V13100	Tk, cbt, full-tracked, 105-mm gun	Gun, 105-mm	NA	9,500—HEP-T at 37° elev.	2,000—HEAT 2,000—ADPS-T	4,400—HEAT	40 by 8 (HEP-T)
10	V13237	Tk, cbt, full-tracked, 120-mm gun	Gun, 120-mm	NA	17,700—HE 23,130—AP-T			
11	J95533	GM sys, AD, Chaparral (XM48)	Msl	NA	Classified	Classified	Classified	Classified
12	J95530	Shillelagh msl sys, MGM-51C	Msl	Classified	Classified	Classified	Classified	Classified
13	J95525	TOW msl sys	Msl	Classified	Classified	Classified	Classified	Classified
14	J96694	Gun, 20-mm, SP, XM163	Gun, 20-mm	High—3,000 Low—1,000	Classified	Classified	Classified	Classified

Table 2-27. Characteristics of Infantry Weapons

1	1 LIN	2 Weapon	3 Cyclic (C) or maximum (M) rate of fire (rd per min)	4 Sustained rate of fire (rd per min)	5 Maximum effective rate of fire (rd per min)	6 Maximum range (m)	7 Maximum effective range (m)	8 Approx effective bursting area (m)
2	G22109	Disperser, riot con agt, hel- or veh-mtd, M5.	Continuous discharge 120 sec.	Continuous discharge 120 sec.	Continuous discharge 120 sec.	12 (in still air with gun).	12 (in still air with gun).	NA
3	G22246	Disperser, riot con agt, ptbl, M3	Continuous discharge 19 sec.	Continuous discharge 19 sec.	Continuous discharge 19 sec.	12 (in still air)	12 (in still air)	NA
4	H68063	Flamethrower, ptbl, M2A1-7	Continuous discharge 6–9 sec.	Continuous discharge 6–9 sec.	Continuous discharge 6–9 sec.	Unthickened fuel–25. Thickened fuel–50	Unthickened fuel–25. Thickened fuel–50	NA
5	H68063	Flamethrower, ptbl, ABC, M9-7	Continuous discharge 5–8 sec.	Continuous discharge 5–8 sec.	Continuous discharge 5–8 sec.	Unthickened fuel–25. Thickened fuel–50	Unthickened fuel–25. Thickened fuel–50	NA
6	J95349	GM, at, with HEAT, 130-mm whd (Entac).	2–3	2–3	----------	2,000	2,000	NA
7	J95359	GM, at, with HEAT, 140-mm whd (M22B).	----------	----------	----------	Classified	Classified	NA
8	L44575	Lchr, gren, 40-mm, M79	----------	----------	----------	400	Pt tgts—150 Area tgts—350	6
9	L45260	Lchr, rkt, 3.5-in., M20A1	18	4	----------	825	Armor defeating: 185—moving; 275—stationary Other tgts—275	18 by 9 (HEAT)
10	L90742	Mg, cal .30, lt, flex, M1919A6	600–675 (C)	75	150	3,200	1,100	NA
11	L91975	Mg, cal .50, hv, flex, M2	450–500	40	100	6,800	AD tgts—725 Gnd tgts—1,825	
12	L92386	Mg, 7.62-mm, lt, flex, M60	550 (C)	100	200 (rapid rate)	3,725	1,100	NA
13	M68008	Mort, 81-mm, on mount, M29	12 (M) for first 2 min with charge 8.	3 with charge 8	12 (M) for first 2 min with charge 8.	3,650	3,650	25 by 20 (A)
14	M68282	Mort, 107-mm, on mount, M30	20 (M) for first 2 min, 6 for next 20 min.	2	20 (M) for first 2 min, 6 for next 20 min, 2 indefinitely.	5,500	5,500	40 by 15 (A)
15	N96741	Pistol, cal .45, auto	35–42 (M)	10	21–28	1,500	50	NA
16	R94977	Rifle, 5.56-mm, M16A1	750 (C) 45–65 (M) semiautomatic. 150–200 (M) auto	Semiautomatic—12–15. Auto—20	Semiautomatic—20–40. Auto—40–60	2,653	460	NA
17	R95114	Rifle, 7.62-mm, M14	700–750 (C)	Semiautomatic—15. Auto—20	Semiautomatic—20–40. Auto—40–60	3,725	460	NA
18	R95525	Rifle, cal .30, M1	----------	8–10	16–24	3,200	460	NA

Table 2-27. Characteristics of Infantry Weapons—Continued

1	1 LIN	2 Weapon	3 Cyclic (C) or maximum (M) rate of fire (rd per min)	4 Sustained rate of fire (rd per min)	5 Maximum effective rate of fire (rd per min)	6 Maximum range (m)	7 Maximum effective range (m)	8 Approx effective bursting area (m)
19	R96073	Rifle, cal .30, auto	350 (C) slow rate 550 (C) fast rate 120–150 (M)	40–60	120–150 (20-rd bursts).	2,750–3,200	460	----
20	R96484	Rifle, rcl, 90-mm, M67	1 per 6 sec not to exceed 5, then 15 min cooling period.	1 per min indefinitely.	----	2,200 (approx)	Armor defeating —400. Other tgts—750	----
21	R96758	Rifle, rcl, 106-mm, on mount	1 per 6 sec not to exceed 5, then 15 min cooling period.	1 per min indefinitely.	----	7,678	Armor defeating: 1,100—moving 1,100—stationary. Other tgts—2,200	14-m radius (HEP-T)
22	U56346	Smg, cal .45, M3A1	450 (C)	40–60	40–60	1,550	100	NA
23		Hand gren	NA	NA	NA	M26A2–40 M34–35	M26A2–40 M34–35	M26A2–15
24		Redeye msl sys	1 per 11–15 sec	----	----	Classified	Classified	----

Table 2-28. Field Artillery Cannons and Rockets

1	1 LIN	2 Weapon	3 Travel weight (lb)	4 Maximum range (m)	5 Time to emplace (min)	6 On carriage traverse (mils)	7 Elevation limits (mils)	8 Rate of fire (rd per min) Maximum	9 Rate of fire (rd per min) Sustained	10 Effective area covered by impact (m) Depth	11 Effective area covered by impact (m) Width	12 Effective area covered by impact (m) Radius of large fragments	13 Air transportability phase	14 Water-crossing capability
2	J97230	Gun, FA, SP, 175-mm, M107.	62,100	32,700	3	1,066	+35—+1,156	1.5	0.5	35	95	518	III	Fordable 42-in.
3	K56981	How, hv, SP, 8-in., M110.	58,500	16,800	2	1,066	+35—+1,156	1.5	0.5	30	80	470	III	Fordable 42-in.
4	K57118	How, hv, towed, 8-in., M115.	29,700	16,800	20	1,066	−36—+1,156	1.5	0.5	30	80	470	III	Fordable 60-in.
5	K57255	How, lt, SP, 105-mm, M108.	46,221	11,500 [a] 15,400	1	6,400	−106—+1,333	10	3.0	20	30	175	III	Amph with kit.
6	K57392	How, lt, towed, 105-mm, M102.	3,140	11,500 [a] 15,400	4	6,400	−89—+1,333	10	3.0	20	30	175	I	Floatable.
7	K57529	How, lt, towed, 105-mm, M101A1.	4,980	11,000 [a] 14,700	3	809	−89—+1,156	10	3.0	20	30	175	I	Floatable.
8	K57666	How, mdm, SP, 155-mm, M109.	51,000	14,600	1	6,400	−53—+1,333	4	1.0	30	50	360	III	Amph with kit.
9	K57803	How, mdm, towed, 15-mm, M114A1.	12,700	14,600	5	866	0—+1,156	4	1.0	30	50	360	I	Fordable 30-in.
10	K57940	How, mdm, towed, 155-mm, M123A1.	13,540	14,600	5	866	0—+1,156	4	1.0	30	50	360	I	Fordable 30-in.
11	L45123	Lchr, rkt, multiple, 115-mm, M91.	1,200	10,600	[b] 30	356	+14—+1,067	15 sec 45 rd.	15 sec 45 rd.	50 percent of rds—25 hectares. 95 percent of rds—114 hectares.			I	Fordable 30 in.
12	L45671	Lchr, rkt, 762-mm, with equip, HJ.	4,719	38,000	[c]	534 [d] 356	+72—+1,066	3 per lchr per hr.	3 per lchr per hr.	----------			II	30- to 60-in.

[a] Extended range.
[b] Includes loading time for 45 rd.
[c] See FM 6-61 for time.
[d] M33 lchr.

Table 2-29. Field Artillery Missiles

1	Weapon	2 Minimum and maximum range (nm)	3 Water-fording capability (in.)	4 Guidance	5 Propulsion	6 Mobility	7 Missile prime mover	8 Field of fire (mils from cen)*	9 Launch elevation (mils)	10 Length (m)	11 Missile weight (lb)		12 Diameter (in.)
											With warhead	Without warhead	
2	PSG	100 to 400	42	Inertial	2-stage solid	Veh—100 percent. Air—ph II.	XM474E2 (tracked veh).	2,225 (right and left).	1,600	10.5	10,275	9,500	40
3	SGT	25 to 75	30	Inertial	Solid	Veh—100 percent. Air—ph II.	Trac, 5-ton, M52.	1,067 (right and left).	1,333	10.5	10,022	8,411	31

*Fields of fire indicate ayatem capabilities to attack targets without repositioning the launcher once it has been emplaced.

Table 2-30. Field Artillery Final Protective Fires

1	1 Weapon (caliber and type)	2 Area effectively covered by one projectile (width by depth)	3 Radius of large fragments (m)	4 Front of battery sheafs: Size of battery: 2-piece	5 Front of battery sheafs: Size of battery: 4-piece	6 Front of battery sheafs: Size of battery: 6-piece	7 Permissible number of rounds per piece: Maximum (rd per min)	8 Permissible number of rounds per piece: Sustained (rd per min)
2	105-mm how	30 by 20	174			180	M101A1—10	3.0
							M108—10	3.0
							M102—10	3.0
3	155-mm how	50 by 30	357			300	M114A1—4	1.0
							M109—4	1.0
4	8-in. how	80 by 30	476		320		M115—1.5	0.5
							M110—1.5	0.5
5	175-mm gun, M107	95 by 35	520		380		M107—1.5	0.5

Table 2-31. Field Artillery Targets

1	1 Area and ammunition	2 Unit: 105-mm bn, 6-piece btry	3 Unit: 155-mm bn, 6-piece btry	4 Unit: 175-mm bn, 4-piece btry	5 Unit: 8-in bn, 4-piece btry
2	Approx size of area covered (m)*	220 by 160	350 by 210	420 by 140	340 by 140.
3	Amount of ammo to cover (rd)	72	72	60	60.

*The area covered effectively is considered that area in which there is at least 50-percent chance that a man standing will become a casualty. The area is roughly eliptical.

Table 2-32. Characteristics of Airmobile Weapon/Armament Subsystems

1	2	3	4	5	6	7	8	9	10
			Rate of fire (rd per min)		Range (m)				
1 LIN	Weapon and ammunition	Mounted on	Cyclic	Maximum	Maximum	Maximum effective	Bursting radius (m)	Ammo capacity (rd)	Total weight (lb)
2 A90154	XM27, mg-hr (high-rate) 7.62-mm	LOH	----	4,000	3,100	1,000	----	2,000	276
3 A90169	TAT 102, mg-hr 7.62-mm	AH-1G	----	4,000	----	----	----	8,000	----
4 A90186	M2, dual mg, 7.62-mm	OH	1,100	1,100	3,200	750	----	1,100	163
5 A90323	M6, quad mg, 7.62-mm	UH-1	2,200	2,200	3,200	750	----	6,700	830
6 A90391	M16, 1 ea M-6 subsys, plus 2 ea 2.75-in. rkt lchr.	UH-1B/C	----	[a] 6 Pair/sec	[a] 9,300	[a] 2,500	[b] 6	[a] 14	1,294
7 A90426	M21, 2 ea 2.75-in. rkt lchr, plus 2 ea 7.62-mm mg-hr.	Hel	4,000	[c] 4,800	3,200	1,000	----	[c] 6,400	1,346
8 A90436	XM28, mg-hr, plus 1 ea M-5 subsys [d]	AH-1G	----	(d)	(d)	(d)	(d)	4,000 Mg 250 Gren	(d)
9 A90460	M5, gren lchr, 40-mm	UH-1B/C	220/240	220	1,750	1,200	10	150	335
10 A90597	XM3, rkt lchr, 2.75-in	UH-1B/C	----	6 Pair/sec	9,300	2,500	[b] 6	48	[b] 1,439
11	M22, msl, AGM-22B	UH-1B/C	----	1/23 sec	3,500	3,500	----	6	682

[a] Applies to rkts. For M6, see line 5.
[b] 6.45-lb warhead.
[c] Applies to mg, 7.62-mm. For rkts, see line 6.
[d] One of each (or both of either). See lines 2 and 9 for additional characteristics.

Section V. CIVIL-MILITARY OPERATIONS

Table 2–33. Characteristics of Chemical Agents

1	1 Name and symbol	2 Odor	3 Effect on body	4 Persistency effect	5 Possible dispersion methods
	Toxic chemical agents				
2	Distilled mustard, HD [1]	Like garlic or horseradish.	Injures eyes and lungs; blisters skin	Up to several weeks	Artillery, bomb, landmine, mortar, rocket, spray.
3	Nerve agent, GB [2]	Odorless	Causes blurred vision with pinpointing of pupils, skin and eye spasms, difficult breathing, tightness in chest, salivation, mental confusion, convulsions, death.	Up to 12 hours	Artillery, bomb, landmine, mortar, rocket, spray.
4	Nerve agent, VX [1]	Odorless	Similar to effects from GB	Long duration	Rocket, mine, artillery, mortar.
	Riot control agents				
5	O-chlorobenzalmalononitrile, CS [3]	Like pepper	Causes tears; irritates skin; and acts as a vomiting agent. May cause temporary pain in chest.	----------	Capsule, artillery, bomb, cartridge, rocket, cluster, grenade, mechanical disperser.
6	Chloroncetophenone, CN [3]	Fragrant	Causes tears and irritates skin	----------	Candle, pellet, grenade, mechanical disperser.
7	Incapacitating agent, BZ [3]	----------	Causes temporary slowing of mental and physical activity, disorientation, and hallucinations.	----------	Bomb, thermal generator.
	Screening smokes				
8	Hexachlorethane-zinc oxide mixture, HC [4].	Slightly acrid	30-minute exposure to ordinary concentration harmless; 1-hour exposure to heavy concentration may irritate nose and throat and cause illness; heavy metal poisoning possible with prolonged exposure.	Subject to atmospheric conditions.	Artillery, bomb, grenade, mortar, pot, rocket.
9	Sulfur trioxide in chlorosulfonic acid, FS [4].	Acrid	Smoke not toxic in ordinary concentration; high concentration irritates eyes, throat, and chest and may cause illness; liquid is corrosive and burns skin.	Subject to atmospheric conditions.	Artillery, mortar, rocket, spray.
10	Fog oil, SGF2	Like petroleum oil	Prolonged exposure can irritate lungs and throat.	Subject to atmospheric conditions.	Smoke generator, grenade, pot.
11	White phosphorus, WP	Like burning matches.	Smoke is harmless in field concentration; solid particles burn flesh.	Subject to atmospheric conditions.	Artillery, bomb, grenade, mortar, rocket.
12	Plasticized white phosphorus, PWP [5]	Like burning matches.	Same effect on body as WP	2–3 minutes	Artillery, bomb, grenade, mortar, rocket.

See footnotes at end of table.

Table 2-33. Characteristics of Chemical Agents—Continued

1	1 Name and symbol	2 Odor	3 Effect on body	4 Persistency effect	5 Possible dispersion methods
	Signaling smokes				
13	Green smoke, GS	Acrid		Subject to atmospheric conditions.	Artillery, bomb, grenade.
14	Red smoke, RS	Acrid		Subject to atmospheric conditions.	Artillery, bomb, grenade.
15	Violet smoke, VS	Acrid		Subject to atmospheric conditions.	Artillery, bomb, grenade.
16	Yellow smoke, YS	Acrid		Subject to atmospheric conditions.	Artillery, bomb, grenade.

[1] Requires protective clothing and mask.
[2] Requires mask; protective clothing required if there is danger of liquid concentrations.
[3] Requires mask.
[4] Mask required in dense concentrations.
[5] Secondary tactical classification is antipersonnel agent; agent also has incendiary effect.

Table 2-34. Characteristics of Chemical Munitions

1	1 LIN	2 Munition	3 Agent symbol	4 Weight of filled munition (lb)	5 Burning time (min)	6 Radius of burst (m)	7 Standard color coding system: Number and color of bands	8 Standard color coding system: Base (primary use)
		Hand grenades						
2	J77626	Gren hand, green-smoke, M18	GS	1.20	1	NA	None	Light-green background; black lettering.
3	J77763	Gren, hand, incd, TH3, AN-M14	TH3	2.00	1/2	NA	None	Light red; black lettering.
4	J78757	Gren, hand, riot con, type CS1, M25A2	CS1	0.50	NA	5	1 red	Gray; red lettering.
5	J79133	Gren, hand, red-smoke, M18	RS	1.20	1	NA	1 light green	Olive drab; light-green lettering.
6	J79270	Gren, hand, riot, CN1, ABC, M25A2	CN1	0.50	NA	5	1 red	Gray; red lettering.
7	J79544	Gren, hand, riot, CS, M7A3	CS	1.00	1/4 to 1/2	NA	1 red	Gray; red lettering.
8	J79681	Gren, hand, smoke, ABC, AN-M8	HC	1.50	2	NA	None	Light green; black lettering.
9	J79818	Gren, hand, violet-smoke, M18	VS	1.20	1	NA	1 light green	Olive drab; light-green lettering.
10	J79955	Gren, hand, yellow-smoke, M18	YS	1.20	1	NA	1 light green	Olive drab; light-green lettering.
11	J80092	Gren, hand and rifle, smoke, WP, M34	WP	1.50	1	35	1 yellow	Light green; light-red lettering.
		Flamethrower						
12	K67817	Ignition cyl, flamethrower, M1	NA	0.10	1/10 to 1/5	NA	None	Light red; black lettering.

		Incendiaries							
13	C39059	Burster, incd, fld, M4	Incd	2.25	NA	35	1 yellow	Light red; black lettering.
14	F52132	Crypto equip destroyer, incd, TH4, M1A2, M2A1.	TH4	34.00	1	NA	None	Light red; black lettering.
15	G33515	Docu destroyer, emerg, incd, M3	Incd	117.00	20	NA	None	Light red; black lettering.
16	H40472	File destroyer, emerg, incd, M3	Incd	117.00	20	NA	None	Light red; black lettering.
		Landmine						
17	M48959	Mine, gas, persistent, VX, 2-gal, ABC and M23.	VX	22.75 (unfuzed)	NA	NA	3 green, 1 yellow.	Gray; green lettering.
		Smokepots and signals						
18	T52025	Sig, gnd, green-smoke, prcht, M128E1	GS	1.16	1/4	NA	None	Light green; black lettering.
19	T52162	Sig, gnd, red-smoke prcht, M129E1	RS	1.16	1/4	NA	None	Light green; black lettering.
20	T84505	Smokepot, HC, 30-lb, M5	HC	33.00	12 to 22	NA	None	Light green; black lettering.
21	T84657	Smokepot, fltg, HC, M4A2	HC	38.00	10 to 15	NA	None	Light green; black lettering.
		Fire starter						
22	U30201	Starter, fire, NP3, M2	NP3	0.03	4	NA	None	Light red; black lettering.
		Rockets						
23	S03725	Rkt, gas, nonpersistent GB, 115-mm, M55	GB	55.00	NA	NA	3 green, 1 yellow.	Gray; green lettering.
24	S03862	Rkt, gas, persistent, VX, 115-mm, M55	VX	56.00	NA	NA	3 green, 1 yellow.	Gray; green lettering.
		81-mm mortar						
25	D50165	Ctg, 81-mm, smoke, WP M370	WP	9.34	NA	20 to 30	None	Light green; light-red lettering.
		90-mm gun						
26	D51535	Ctg, smoke, WP, 90-mm gun, M313	WP	23.64	NA	15 to 30	None	Light green; light-red lettering.
27	D51672	Ctg, 90-mm, smoke, WP, M313C	WP	23.57	NA		None	Light green; light-red lettering.
		105-mm howitzer						
28	D54275	Ctg, 105-mm, gas, HD, M60	HD	43.27	N1	NA	2 green	Gray; green lettering.
29	D54412	Ctg, smoke, WP, 105-mm how, M60	WP	34.83	NA	20 to 40	None	Light green; light-red lettering.
30	D54960	Ctg, green-smoke, BE, 105-mm how, M84	GS	30.48	1 to 4	NA	None	Light green; white lettering.
31	D55097	Ctg, smoke, HC, BE, 105-mm how, M84	HC	32.86	1 to 4	NA	None	Light green; white lettering.
32	D55234	Ctg, red-smoke, BE, 105-mm how, M84	RS	30.68	1 to 4	NA	None	Light green; white lettering.
33	D55508	Ctg, yellow-smoke, BE, 105-mm how, M84	YS	30.29	1 to 4	NA	None	Light green; white lettering.
34	D56878	Ctg, gas, nonpersistent, 105-mm how, M360	GB	35.59	NA	NA	3 green	Gray; green lettering.
35	----------	Canister, green-smoke, 105-mm shell, M2	GS	40.30	2	NA	None	Light green; black lettering.

Table 2-34. Characteristics of Chemical Munitions—Continued

1	2	3	4	5	6	7	8
							Standard color coding system
1 LIN	Munition	Agent symbol	Weight of filled munition (lb)	Burning time (min)	Radius of burst (m)	Number and color of bands	Base (primary use)
36	Canister, red-smoke, 105-mm shell, M2	RS	40.50	2	NA	None	Light green; black lettering.
37	Casister, smoke, HC, 105-mm shell, M1	HC	42.70	3	NA	None	Light green; black lettering.
38	Canister, violet-smoke, 105-mm shell, M2	VS	40.30	2	NA	None	Light green; black lettering.
39	Canister, yellow-smoke, 105-mm shell, M2	YS	40.10	2	NA	None	Light green; black lettering.
	Miscellaneous						
40 D41048	Ctg, 40-mm, red-smoke fill, for lchr, M79	RS				None	Bright red; black lettering.
41 D41052	Ctg, 40-mm, riot con, CS fill, for lchr	CS		NA		1 red	Gray; red lettering.
42 D59344	Ctg, gas, persistent, HD, 4.2-in mort, M2A1	HD	23.50	NA		2 green	Gray; green lettering.
43 D59481	Ctg, smoke, WP, 4.2-inch mort, M328	WP	28.66	NA	20 to 50 [a]	None	Light green; light-red lettering.
44 E42210	Cluster canister, tac CS, 130-lb, E159	CS	130			1 red	Gray; red lettering.
45 E42460	Cluster frag bomb, incapacitating M43	BZ				2 red	Gray; red lettering.
46 L43914	Lchr and 35-mm ctg, tac CS, 16-tube, E8	CS	33.5			1 red, 1 brown	Gray; red lettering.
	120-mm gun						
47 P69501	Proj, 120-mm, smoke, WP-T, M357	WP	50.30	NA	50 [a]	None	Light green; light-red lettering.
	155-mm howitzer						
48 P72789	Proj, gas, persistent, HD, 115-mm how, M110.	HD	94.00	NA		2 green	Gray; green lettering.
49 P73063	Proj, green-smoke, BE, 155-mm how, M116B1.	GS	86.44	1/2 to 4	NA	None	Light green; white lettering.
50 P73200	Proj, smoke, HC, BE, 155-mm how, M116B1	HC	94.35	1 to 4	NA	None	Light green; white lettering.
51 P73337	Proj, red-smoke, BE, 155-mm how, M116B1	RS	86.44	1/2 to 4	NA	None	Light green; white lettering.
52 P73611	Proj, yellow-smoke, BE, 155-mm how, M116B1.	YS	86.44	1/2 to 1/4	NA	None	Light green; white lettering.
53 P73885	Proj, gas, nonpersistent, GB, 155-mm how, M121A1.	GB		NA	(b)	3 green	Gray; green lettering.
54 P74022	Proj, gas, persistent, VX, 155-mm how, M121A1.	VX		NA	(b)	3 green	Gray; green lettering.
55	Canister, violet-smoke, 155-mm shell, M3	VS	86.40	1 to 3	NA	None	Light green; black lettering.
56	Canister, violet-smoke, 155-mm shell, M4	VS	86.40	1/2 to 3	NA	None	Light green; black lettering.
57	Canister, yellow-smoke, 155-mm shell, M3	YS	86.40	1 to 3	NA	None	Light green; black lettering.
58	Canister, yellow-smoke, 155-mm shell, M3	YS	86.40	1/2 to 3	NA	None	Light green; black lettering.
59	Canister, green-smoke, 155-mm shell, M4	GS	86.44	1 to 3	NA	None	Light green; black lettering.
60	Canister, green-smoke, 155-mm shell, M4	GS	86.40	1/2 to 3	NA	None	Light green; black lettering.
61	Canister, red-smoke, 155-mm shell, M3	RS	86.40	1 to 3	NA	None	Light green; black lettering.
62	Canister, red-smoke, 155-mm shell, M4	RS	86.40	1/2 to 3	NA	None	Light green; black lettering.
63	Canister, smoke, HC, 155-mm shell, M1	HC	95.10	2 to 4	NA	None	Light green; black lettering.
64	Canister, smoke, HC, 155-mm shell, M2	HC	94.35	1 to 4	NA	None	Light green; black lettering.

		8-in. howitzer						
65	P75392	Proj, gas, nonpersistent, GB, 8-in. how, M426.	GB		NA	(b)	3 green	Gray; green lettering.
66	P15529	Proj, gas, persistent, VX, 8-in. how, M426	VX		NA	(b)	3 green	Gray; green lettering.
		Rocket warheads						
67	Y25286	Whd sec, 762-mm rkt, gas, nonpersistent, GB, M190.	GB	1,716.00	NA	(b)	3 green, 1 yellow	Gray; green lettering.
68	Y26314	Whd, 2.75-in. rkt, smoke	WP		NA		1 brown	Light green; light-red lettering.
69		Whd, 2.75-in. rkt, colored smoke			NA		1 brown	Light green; black lettering.
70		Whd sec, GM, gas, nonpersistent, GB, M212	GB	2,069.99	NA	(b)	3 green, 1 yellow	Gray; green lettering.

[a] For antipersonnel effect.
[b] Information is classified.

2-32. General

a. The civil-military operations staff function is comparable to those for operations and logistics. The primary concern of the civil-military operations staff section is planning, coordination, and staff supervision of political, economic, social, and psychological aspects of military operations. The section has staff responsibility for internal development asistance activities, civil affairs, and psychological operations.

b. For psychological operations and civil affairs troop units in a type of field army, see table 1-3. No combined civil-military operations or civil affairs/psychological operations units are organized.

2-33. Psychological Operations

Psychological operations are all the political, military, economic, and ideological actions, including propaganda and other psychological actions, planned and conducted to create in foreign groups the emotions, attitudes, or behavior to support a military plan in the achievement of national objectives. Psychological operations include both propaganda and nonpropaganda activities.

a. Propaganda Operations. Production and dissemination of propaganda media require technical specialists and specialized equipment normally supplied by psychological units. These units are organized from TOE 33-500 and other cellular TOE as dictated by the specific mission and environment.

(1) *Radio and television broadcasting.* The radio production team in TOE 33-500, or similar indigenous or table of distribution teams, can produce up to 8 hours of original radio programs per day in support of propaganda operations. This capability depends on the type of programing (table 2-35). The radio production teams often require broadcast-quality audio circuits (6-9 khz) between the central studio complex and remote transmitter sites. Other TOE teams are provided to supervise or control indigenous radio and television stations.

(2) *Printed media.* Leaflets, newssheets, magazines, and posters are produced by psychological operations printing teams from TOE 33-500. The capabilities of these teams are shown in table 2-36. A production unit means one sheet, 8 by 10½ inches, one side only, and one color. A 3- by 6-inch leaflet or equivalent is one sheet, 3 by 6 inches, printed one color on each side. Shipping weights of selected printed media are given in table 2-37. The shipment of large quantities of printed media frequently poses problems for logistic planners, since paper is heavy per unit volume and propaganda media are often shipped on a high-priority basis to exploit a fleeting vulnerability.

Table 2-35. Psychological Operations Radio Production

1	1 Type of programing	2 For 1 hour of programing— Writing and translating [1]	3 For 1 hour of programing— Studio production [2]
2	Music with comments	30	3
3	News	48	3
4	Commentary	72	3
5	Educational and informative documentary.	90	4
6	Interviews and discussion		30
7	Drama	120	8

[1] Man-hours for writing new material plus translation to or from English.
[2] Total hours studio is used for setup and production.

b. Nonpropaganda Operations. These measures include actions that influence the opinions or behavior of target groups. Examples of nonpropaganda psychological operations are individual conduct, cover and deception, rewards, civic action, elections, and certain tactical operations, such as a show of force.

2-34. The Role of Civil Affairs

The role of civil affairs is to support the accomplishment of any of the military commander's missions that affect the interrelationships between the military forces and the civil authorities and/or the population in any area in which military forces are present. Execution of civil affairs operational missions contributes to accomplishment of the combat mission by supporting the commander's tactical plans with political, economic, and sociological measures that impact on the civilian element of a friendly or enemy country. The civil affairs plan of a command should be designed to provide both the physical and the psychological circumstances that will permit and encourage favorable response from the civilian population. For details on civil affairs, see FM 41-10.

2-35. Civil Affairs Organization

a. Important considerations in structuring a civil affairs force include—

(1) The mission to be accomplished.

Table 2-36. Printed Media Production (Maximum)

1	2	3	4	5
Team	Press(es)	Production units (per hr)	Production units (per 24-hr day)*	3- by 6-inch lesflets or equivalent (per day)*
Light printing	Duplicating machine, offset, Multilith 1250W (Printing plant, special warfare, transportable.)	10,000	200,000	350,000
Medium printing	*a.* Printing press, offset, rotary, special warfare type II *b.* Multilith 1250. (Printing plant, special warfare, semitrailer-mounted.)	50,000	1,200,000	3,850,000
Heavy printing	*a.* Printing press, offset, rotary, special warfare type III (2 ea). *b.* Printing press, offset, 19- by 25-inch maximum sheet (2 ea). *c.* Duplicating machine, offset, Multilith 1250W (1 ea).	150,000	3,000,000	9,050,000

*Includes maintenance and preparation (make ready) time.

Table 2-37. Printed Media Shipping Weights

1	2	3
Description	Quantity	Weight (lb)
3- by 6-inch leaflets; 20-pound bond paper.	1,000	1.9
	Box of 55,000	108.0
5¼- by 8-inch leaflets; 60-pound book paper.	1,000	5.3
	Box of 20,000	108.0
8- by 10½-inch newssheets; 20-pound bond paper.	1,000	9.0
	Box of 5,000	47.0
17- by 22-inch posters; 60-pound book paper.	1,000	50.0
8- by 10½-inch magazines, 32 pages; 50-pound book paper.	1,000	145.0

(2) The civilian situation.

(3) The international context in which combat forces are operating.

(4) The type of deployment based on the size and nature of the civilian population.

b. The concept of civil affairs organization is cellular and permits both economy of personnel and the structuring of a unit to an area or a mission. The organization must have a flexible structure so that it can advise, assist, coordinate, and supervise—

(1) Intercommand movement of displaced persons, evacuees, and refugees; available civilian supplies; and civilian transportation equipment.

(2) Development of army-wide requirements for the support of the population and local economy.

(3) Distribution of the available labor force for maximum utilization by profession, technical specialty, and skills.

(4) Area pacification programs.

(5) Population and resources control plans.

(6) Civic action programs.

(7) Rural and urban redevelopment plans and programs.

c. Whenever feasible, civil affairs units, operating under the supervision of the local G5, are allocated areas of responsibility based on political boundaries. When this is not practical, the areas should coincide with tactical boundaries.

2-36. Civil Affairs Activities in the Combat Zone

Civil affairs units initiate actions in an area when it comes under the control of friendly military forces. In forward areas, civil affairs activities support tactical operations. Certain activities, such as restoration of public order and safety, control of refugees and displaced persons, and provision of emergency relief to the indigenous population, may receive primary attention during the early stages of combat. As the situation becomes static, these activities will share importance with such functional specialties as public health, public works and utilities, civilian supply, civil information, transportation, and labor. In a static situation, or when political entities may be consolidated, consideration should be given to more liberal policies in the control of the local inhabitants under the provisions of applicable treaties or agreements and in conformance with

US objectives. It is essential to establish or maintain an indigenous government at all levels and to confirm, as soon as possible, its degree of authority. Prime effort will be the prevention of civilian interference with and the fostering of civiian support of military operations.

2–37. Displaced Persons, Evacuees, and Refugees

a. General. Effective control of the movement of civilians is of primary importance. Disorganized masses seriously impair the movement of military units, endanger security, and threaten the health of the military force. To prevent interference with military operations by the movement of the local populace, planners must consider the care, control, and disposition of displaced persons, evacuees, and refugees.

b. Planning. Detailed planning for the care and control of displaced persons, evacuees, and refugees should include such matters as—

(1) The authorized extent of migration and evacuation.

(2) Location and establishment of camps.

(3) Standards of care.

(4) Status and ultimate disposition of refugees and displaced persons from allied, neutral, or enemy countries.

(5) The extent of local government authority over nonnational civilians.

(6) Designation of routes for refugee movement.

(7) Civil affairs units to supervise camp operations.

c. Evacuation.

(1) *General.* When possible, the rearward evacuation of communities in forward areas should be avoided. Such evacuation—

(*a*) Removes civilians from areas where they can maintain themselves.

(*b*) Provides a ready audience for enemy propaganda.

(*c*) Arouses resentment.

(*d*) Complicates military control of the civilians' movements.

(*e*) Increases the difficulties of maintaining adequate security.

(*f*) Necessitates the use of military transport and the expenditure of additional food, fuel, clothing, and medical supplies.

(*g*) Creates epidemic conditions and decreases availability of facilities to support military operations.

(2) *Evacuation planning.* The number of civilians that must be evacuated in specific situations will vary. Planners may, however, develop workable estimates using the factors listed below.

(*a*) *Transportation.* Use civilian transportation when available.

(*b*) *Distance.* Move only the minimum distance.

(*c*) *Fallout.* Avoid possible fallout areas.

(*d*) *Screening.* Screen and document evacuees as soon as possible.

(*e*) *Identification.* Provide each evacuee with an identification card.

(*f*) *Briefing.* Tell the evacuees why they are being moved.

(*g*) *Impedimenta.* Determine the amount each person is allowed to take.

(*h*) *Rations.* Issue rations for a short move at the time of departure or en route.

(*i*) *Priority.* Determine categories and timing of evacuations from the mission.

(*j*) *Assembly areas and camps.* Use existing civilian facilities to the maximum.

(*k*) *Medical care.* Use civilian personnel when available.

(*l*) *Religious needs.* Where possible, make available the required religious facilities.

(*m*) *Duration.* Return evacuees as soon as possible.

(*n*) *Return.* Include return plans in the evacuation plan. For additional information on evacuation, see FM 41–10.

CHAPTER 3

COMBAT SUPPORT—SIGNAL AND ENGINEER

Section I. SIGNAL COMMUNICATIONS

3–1. General

a. The data in this section are for use as general guides. The technical nature of signal operations and varying security measures require that these data be applied only as recommended by the unit signal officer after modification to local field conditions and in view of the tactical situation.

b. Signal troop units found in a type of field army are in table 1–3.

c. Signal construction factors are in paragraph 7–16.

d. Characteristics of target acquisition and combat surveillance equipment are in FM 101–10–3.

e. The following publications govern signal communications:

(1) Pertinent sections of the unit standing operating procedure (SOP) set forth the general principles under which the unit signal system will operate. Usually, the SOP is governed by the provisions of the SOP of the next higher headquarters and, in turn, serves as a guide for that of a subordinate headquarters.

(2) The standing signal instructions (SSI) explain the use of items included in the signal operation instructions (SOI). SSI at various command echelons are identical or similar in content. Instructions that are identical in several commands are prepared and distributed by the highest common command when such centralized preparation is feasible.

(3) SOI contain the specific technical directions for the operation of the various means of signal communications. They include separate items providing such information as telephone directory code names and numbers, radio call signs and frequencies, unit code and ciphers, and pyrotechnic signals. Because changes in items of SOI occur frequently, paragraph 5 of the field order specifies the current index.

(4) Joint Army-Navy-Air Force Publications (JANAP) and Allied Communication Publications (ACP) contain joint and combined instructions, methods, and procedures pertaining to communication planning and operations.

(5) Details on signal orders, records, and reports are in FM 24–16.

3–2. Users Served by the Signal Communication System

The military signal communication system in a theater of operations provides service for the following:

a. Signal communications in the combat zone.

(1) Division.
(2) Corps.
(3) Field army.
(4) Army group.

b. Signal communications in the communications zone (COMMZ) (FM 11–23).

(1) Theater army support command.
(2) Personnel command.
(3) Supply and maintenance command.
(4) Engineer command.
(5) Transportation command.
(6) Medical command.
(7) Area support command.
(8) Interzonal services.
(9) Other command headquarters.

c. Communication facilities as required for—

(1) Air defense.

(2) Coordination of Army and Air Force activities, including facilities for the request of air support.

(3) Coordination of Army and Navy activities.

(4) Military police activities, including traffic control.

(5) Personnel replacement systems.

(6) Intelligence and counterintelligence activities.

(7) Civil affairs.

(8) Psychological operations.

(9) Press, public relations, and special services activities.

(10) Guided-missile installations and activities.

(11) Stability operations and unconventional warfare.

(12) Interallied signal communications.

(13) Electronic warfare.

(14) Meteorological service.

(15) Signal security activities.

(16) Air traffic control.

(17) Air navigation systems.

(18) Identification, friend or foe, systems.

(19) Automatic data processing systems.

(20) Military highway communications.

(21) Petroleum, oil, and lubricant (POL) supply.

3–3. Field Army Communication System

a. General. The field army communication system (FACS) provides the field army commander a reliable signal communication system with which to influence the tactical operations of subordinate units. The system also provides signal communications to combat support and combat service support units, which enable them to react rapidly and keep pace with the combat forces. The FACS consists of a command communication system and an area communication system, which are provided by the army signal brigade assigned to the field army. Each subordinate organization of the field army is authorized sufficient signal personnel and equipment to install, operate, and maintain both a command communication system and an area communication system. The equipment and techniques of all systems are compatible, so that there is no interface problem throughout the field army area.

b. Command Communication System. The command communication system is developed along command lines, from senior headquarters to each subordinate headquarters, and connects with adjacent field army headquarters and allied force headquarters or both. The system interconnects echelons of field army headquarters, such as corps, field army artillery, separate division or brigade supporting field army headquarters, and other designated units.

c. Area Communication System. The area communication system provides long-distance signal communication links on an area basis for combat support and combat service support units. It also acts as a backup or alternate system for the command communication system when this system is disrupted by displacement of tactical headquarters, enemy action, natural disasters, or other causes. The area communication system is not limited to the boundaries of the units that it serves, but is established along several longitudinal axes with multiple lateral interconnections between signal centers. The signal centers have sufficient communication facilities to enable the movement of command posts from one location to another without disruption of the overall system and to provide the maximum number of alternate routes for message handling to reduce the probability of interruption of communications between major units.

3–4. Communications Center

a. Function. The function of the communications center (COMMCEN) is to transmit, receive, and deliver messages by the most reliable means. The figures in the tables in this paragraph and in those in paragraph 3–5 apply to COMMCEN operations and are based on World War II experience. Under present and future concepts of operations, the accuracy of these figures may vary.

b. Cryptographic Operations. Table 3–1 is computed from afteraction reports of selected units in the European Theater of Operations (ETO) during World War II. It includes messages sent by radio, teletypewriter, and miscellaneous means.

c. Precedence. Table 3–2 shows the nomenclature for classes of precedence. It was compiled from afteraction reports in the ETO during World War II and has been changed to conform to present usage.

Table 3–1. Cryptographic Operations

	1	2	3	4	5
1	Item	Division	Corps	Field army	Army group
2	Average code groups per month.	225,000	500,000	750,000	1,800,000

d. Speed of Transmission. Table 3-3 shows the average speed of transmission for various message media.

Table 3-2. Classes of Precedence (Percentage)

	1	2	3	4	5
1	Item	Flash	Immediate	Priority	Routine
2	Percentage of all messages (field army headquarters).	2	36	23	39

Table 3-3. Speed of Transmission

	1	2
1	Method of transmission	Approximate transmission rate (WPM)[1]
2	Panels (15 code groups per hour)-----	0.25.
	CW manual telegraph (wire or radio, one-way): [2]	
3	Average operator (hand printed)---	12–15.
4	Skilled operator (typewritten)------	25–40.
	Teletypewriter (wire or radio, one-way):	
5	Average operator (keyboard operation)----------	25–40.
6	Tape operation (on one telegraph circuit)----------	60 or 100.
7	Tape operation (on one voice circuit, 16 tape circuits).	960 or 1,600.
	Facsimile (wire or radio, one-way, weather mapsize copy or two 8 by 10½ pages in 20 minutes):	
8	Average text per page (400 words)----------	40.
9	Completely filled page, no margins or blank space (1,000 words).	100.
	EAM data cards (wire or radio, one-way, fully punched, 80 columns or 13 words per card):	
10	On a 60-WPM telegraph circuit--	39.
11	On a 100-WPM telegraph circuit-	65.
12	On a 3-kilohertz voice circuit (11 cards per minute).	143.
13	Maximum on voice circuit (4 by 11 cards per minute).	572.
	Fieldata messages (wire or radio, one-way, 8 bits per character):	
14	Paper tape on telegraph circuit---	60 or 100.
15	Paper tape on a 3-kilohertz voice circuit.	Up to 600.
16	Magnetic tape on average voice circuit.	Up to 1,500.
17	Magnetic tape on special voice circuit.	Up to 3,000.
18	Magnetic tape on 48-kilohertz, 12 voice-channel group.	Up to 24,000.
19	Magnetic tape on 1-megahertz video circuit.	Up to 500,000.
	Telephone (or voice on wire or radio, one-way):	
20	Push-to-talk operation (radio-telephone).	80–120.
21	Average talker----------	100–150.
22	Fast talker reading clear text----	150–250.
23	Enciphered code group using phonetic alphabet.	15–20.

[1] One word equals 5 characters plus a space.

[2] Simplex, half-duplex, one-way-at-a-time, or one-way automatic-reversible operation speeds are the same as for one way. The total operation speed for both directions of full-duplex operation is equal to twice that of one-way operation.

3-5. Means of Signal Communications

a. General.

(1) *Military messages.* Military messages are transmitted by—

(*a*) Messenger, including scheduled and special foot, motor, and aircraft messengers and officer couriers.

(*b*) Wire circuits, including telephone, teletypewriter, and facsimile.

(*c*) Visual, including flags, panels, lamps, and pyrotechnics.

(*d*) Sound, including whistles, horns, loudspeaker systems, and small-arms fire.

(*e*) Radio circuits, including teletypewriter, voice, continuous wave, facsimile, and data and special transmission.

(*f*) Ancillary devices, such as data processing and transmission facilities and special communication devices.

(2) *Use of signal communication means.* Messenger, wire, and radio are used for communications within and between divisions, corps, field army, and higher headquarters. Besides these means, visual and sound systems are used in air-ground signaling, in amphibious operations, for emergency communications within small units, and as warning signals.

Table 3-4. Radio Traffic

1	Item	2 Armored division	3 Infantry division	4 Corps	5 Field army	6 Army group
2	Average messages per month	2,400	200	500	9,500	3,800
3	Average code groups or words per month		35,000	85,000	163,000	650,000

b. Radio.

(1) *General.* The traffic handled by radio—exclusive of messages handled by radio-relay equipment installed as part of or in lieu of the wire net—depends on the type of unit and the rate of movement. In general, radio forms a standby means of communications during static conditions when its operation would provide information subject to enemy interception and analysis. However, in fast-moving situations when it is difficult to extend wire lines rapidly enough and when units disperse on a wide front, radio becomes a major means of communications.

(2) *Radio traffic.* Table 3–4 contains radio traffic data based on selected units in the ETO during World War II.

c. Television. Military television is currently limited to noncombat applications in the continental United States, the COMMZ, and United States Army, Vietnam (e.g., conference, training, and entertainment).

d. Wire.

(1) *General.* Wire communication networks generally provide a more secure means of electrical transmission of messages than radio. Relative security depends on the geographical location of the net, the tactical situation, local security measures, the type of equipment being used, and the type of conductor employed in the line. The transmission of classified messages in the clear over these circuits is resorted to only when the urgency of the tactical situation outweighs the security requirements.

(2) *Telephone.* Each headquarters has enough telephone facilities to satisfy normal operating requirements, provided proper use is made of written messages for traffic not adapted to telephonic transmission. Table 3–5 shows the average number of calls per day handled by switchboards in major headquarters in the ETO during World War II.

(3) *Teletypewriter.* Table 3–6 shows the average number of teletypewriter messages handled by various types of headquarters in the ETO during World War II.

Table 3-5. Telephone Traffic

1	Item	2 Division	3 Corps	4 Field army	5 Army group
2	Calls per day	2,000	5,000	12,500	18,000

Table 3-6. Teletypewriter Traffic

1	Item	2 Division	3 Corps	4 Field army	5 Army group
2	Messages per month.	750	4,000	11,500	28,000

(4) *Construction.* Paragraph 7–16 contains figures on permanent and semipermanent wire construction.

(*a*) Table 3–7 shows the rates of wire-line construction.

(*b*) Table 3–8 shows the rates of construction for field wire, cable, and open wire laid to next subordinate headquarters by selected units in the ETO during World War II.

Table 3-7. Rates of Wire-Line Construction

1	Type of wire	2 Foot troops	3 Reel trucks	4 Signal construction battalion
2	Field wire	2½ kmph per 3-man team.	5–8 kmph per 6-man team.	
3	Spiral-4 cable (on existing support).		1½ kmph per 8-man team.	
4	Open wire (10-wire pole line).			48 km per week.

Table 3-8. World War II Experience Data on Wire-Line Construction

	1	2	3	4
1	Kilometers per month of—	Division	Corps	Field army
2	Field wire	700	------	--------
3	Cable and field wire	1,100		2,100
4	Open wire			800

(*c*) Table 3–9 shows the average rates of repair of wire lines by a division signal company over a 6-month period in the ETO during World War II.

e. Comparison Between Radio-Relay and Wire-Circuit Installation Times. Figure 3–1 shows a comparison between radio-relay and wire-circuit installation times, including site survey and selection, travel time, equipment, and antenna, when all sites are accessible to vehicles. Wire facilities are based on a 12-hour day, considering losses due to loading, travel, supply, and vehicle maintenance; capability is for an eight-man team.

f. Messenger.

(1) Table 3–10 lists the rates of travel of various types of messengers, with no consideration to traffic restrictions, climate, or weather.

(2) Each headquarters receives message deliveries. Motor messenger carries the bulk of messenger traffic. Table 3–11 indicates the capabilities of motor messenger service available to units.

Table 3-9. Rates of Wire-Line Repair

	1	2	3	4
1	Item	Daylight	Night	Average time out day and night
2	Elapsed time in minutes	70	120	95

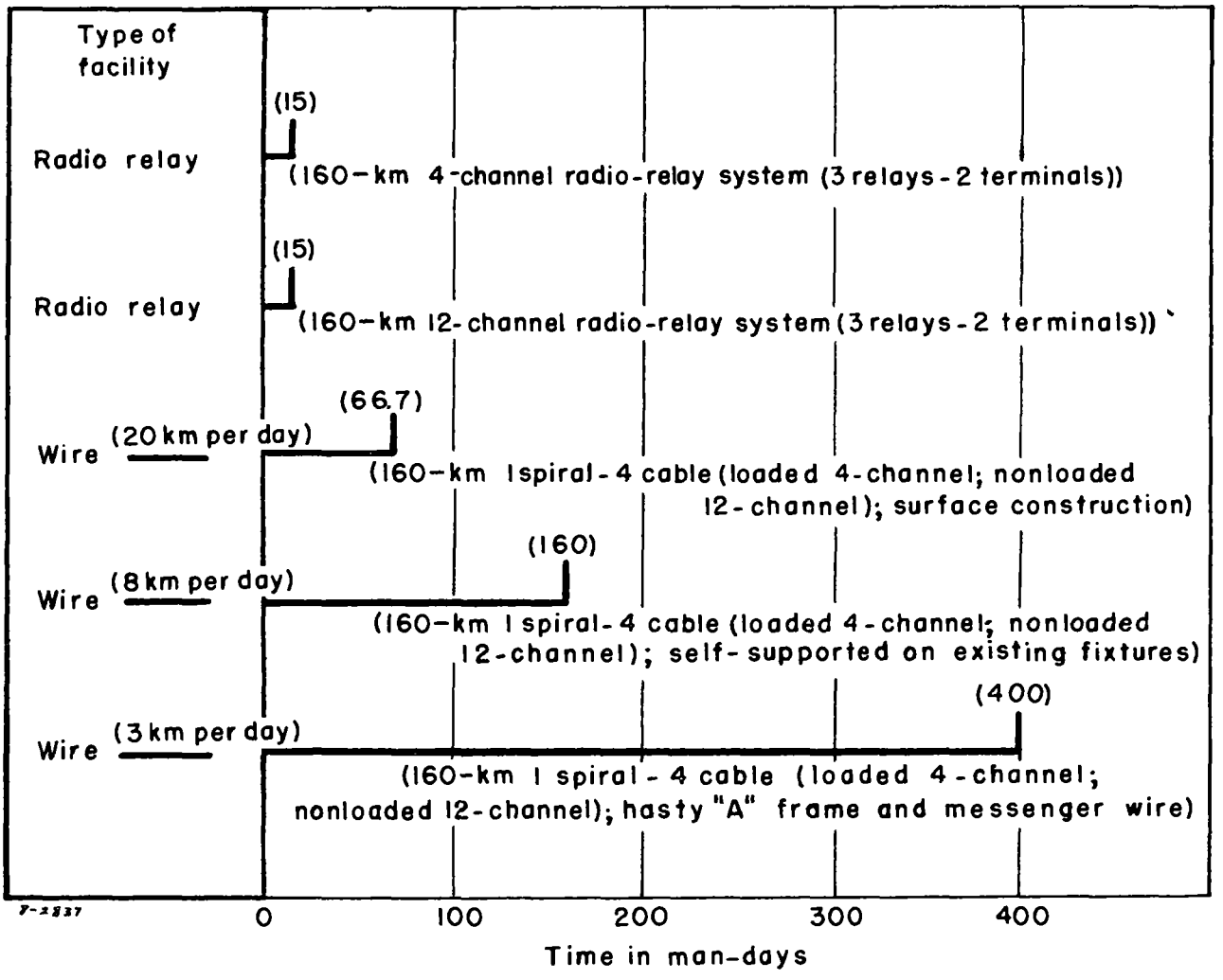

Figure 3–1. Radio-relay and wire-circuit installation times.

Table 3-10. Rates of Travel of Messengers

1	1 Kind of messenger	2 Rate of travel (kmph) Day	3 Rate of travel (kmph) Night
2	Dismounted (runner)	5-8	3-6
3	Motor	40-65	24-50
	Aircraft:		
4	Fixed-wing	145-260	145-260
5	Rotary-wing	96-160	96-160

Table 3-11. Messenger Traffic

1	1 Item	2 Division	3 Corps	4 Field army
2	Kilometers of route per month.	11,265	48,280	144,841
3	Pouches and messages	17,000	50,000	150,000

(3) Accounting for messages in the COMMCEN by pouch rather than by individual message increases the quantity of messages that a messenger can transmit and the speed of transmission.

3-6. Special Communication Requirements

a. General. Certain intersectional services require special communication facilities. Whenever possible, these requirements are integrated into the theater army communication system (TACS). Special requirements of these services are presented in *b* through *e* below.

b. Military Railway Service Commnuication Data. A military railway service communication system may consist of an extensive wire system, if acquired through military activities in a theater of operations. It may be advantageous to use the existing wire sytem if it can be rehabilitated easily. In a new system, multichannel radio normally will be provided, with portable radios used for special situations, such as switchyard control between engineer and brakeman.

(1) Communication services must be provided for—

(*a*) Dispatcher to way stations.

(*b*) Way station to way station.

(*c*) Dispatcher to dispatcher.

(*d*) Military railway service headquarters to military superior headquarters.

(2) The services provided in (*c*) and (*d*) above require both telephone and teletypewriter facilities.

c. Military Pipeline Communication Data.

(1) Military pipeline communications may be provided on allocated channels of the TACS. In geographical areas where it is not feasible to use this sytem, a separate radio-relay system will be installed; and, when practicable, it will be integrated with the TACS.

(2) Very high-frequency (VHF) radio facilities are provided at each pumping station, tank farm complex, and district dispatcher's office for communications to airmobile and ground mobile units. This equipment also provides emergency communications between these elements.

(3) High-frequency radio facilities are provided for emergency communications between the chief dispatching station and each district dispatcher.

(4) Equipment associated with the system consists of telephone dispatching systems, teletypewriter sets, simplex and composite sets, telephone and telegraph voice-frequency repeaters, and may include telephone carrier systems.

(5) For planning, 65 percent of the total pipeline communication circuit requirements in an oversea theather will be provided from the TACS. This estimate is based on the assumption that the pipelines and the axes of the TACS generally coincide. The remaining 35 percent of the pipeline communication circuit requirements will be provided by the Signal Corps as separate construction to support the POL system.

d. Military Highway Communication Data.

(1) A military highway communication system usually consists of fixed VHF radio stations located at strategic intervals of from 60 or 80 kilometers. These stations may be adjacent to the traffic control posts (TCP) and highway regulation points or may be at the same location. The fixed radio stations are connected to the nearest theater army signal switching center for access to the integrated TACS. This connection also enables the strategically located highway radio stations, TCP's, and highway regulation points to communicate with one another and with ports, depots, headquarters, and other areas.

(2) The fixed VHF radio stations enable radio-equipped vehicles, normally military police and some transportation or ordnance vehicles, to communicate with the nearest TCP and highway regulation point while moving or stopped. All such radio contact depends on the terrain, location of fixed and vehicular radio sets, and other factors affecting radio transmission.

(3) Besides radio and telephone communications between fixed and vehicular radio stations, telephone and teletypewriter circuits are provided by the open wire or radio-relay facilities between the fixed radio stations serving the TCP's and the highway regulation points.

(4) Signal units operate the fixed radio stations to provide maximum economy of equipment, radio frequencies, speed of service, and efficiency to the various services and units requiring communications along the military highway system. At each fixed radio station, signal personnel also operate a small switchboard, when required, with local telephone connections to the various adjacent services operating the TCP's and the highway regulation points. In some instances, the fixed radio station will be located at or near a theater army signal switching center or a local signal center and will use its switchboard facilities.

e. Air Defense Communication Data.

(1) Air defense artillery (ADA) tactical success depends to a large extent on a reliable communication system. Precise track information on airborne targets and command and control data must be rapidly and accurately exchanged if ADA is to accomplish its assigned tasks.

(2) ADA units in a theater of operations are normally linked together with an electronic fire distribution system (missile monitor). The use of this fire distribution system demands the instantaneous exchange of automatic data link and voice information between various echelons of the air defense command.

(3) As presently established, the FACS does not possess the capabilitie to provide ADA units with a sufficient number of circuits to satisfy their needs. Future proposed increases in the traffic-handling capability of the FACS may make its use in ADA feasible.

(4) A VHF/ultra high-frequency (UHF) radio-relay system is established by signal detachments provided ADA units by attachment of appropriate personnel from TOE 11–500. The equipment is basically the same as that used to establish the FACS and provides generally the same capabilities. VHF/UHF radio-relay facilities are established at each ADA unit, using the missile monitor system and providing the following channels:

(*a*) Automatic data link.
(*b*) Air defense control.
(*c*) Intelligence and radar reporting.
(*d*) Administrative and maintenance.

Table 3–12. Pictorial Facilities of a Field Army

1	2	3	4	5	6	7
Unit	TOE	Ground cameras	Aerial cameras (acft)	Motion-picture cameras	Still-photographic laboratory	Motion-picture laboratory
Corps avn co	1–127G		X		Svc from corps sig bn.	
AAVN co	1–137G		X		Svc from fld army.	
Avn co, abn SF gp	1–307G		X		X	
HHC, corps sig bn	11–16G	X		X	X	Svc from thtr.
Sig spt op co, sig bn, armd, inf, and inf (mech) div	11–39H	X		X	X	Svc from thtr.
HHC, army sig bde	11–102G	X		X	X	Svc from thtr.
Sig co, abn SF gp	11–247G	X		X	X	Svc from thtr.
HHC, MI bn, air recon spt, fld army MID, air recon spt, fld army	30–6G 30–7G	These units have special laboratory equipment for Army reproductions of USAF airphotographs.				
PSYOP teams	33–500G	X		X	X	

(5) If an electronic fire distribution system is not used, the necessary data are exchanged over communication nets established by radios organic to the ADA units. If fire distribution system equipment is available, the TOE radios provide a backup means of communications.

3–7. Signal Pictorial Services

Division, corps, and field army use still- and motion-picture ground photography, air still photography, and still-picture laboratory processing services. Facilities to provide these various services are available in differing degrees, commensurate with the pictorial requirements at these levels of command. Pictorial facilities at division are used extensively for intelligence gathering, historical records, administrative purposes, training, and information. However, each level of command is responsible for providing pictorial support to its subordinate units; when such support is for tactical purposes, requests from subordinate units get priority. Additionally, units from theater army may provide film and equipment and television services. Table 3–12 shows the pictorial facilities of a field army.

3–8. Characteristics of Communications-Electronics Equipment

Table 5–32 provides dimensions and weights for communications-electronics (C–E) equipment. FM 24–19 lists the nomenclature, description, range, and appropriate remarks for each category of C–E equipment.

Section II. ENGINEER SUPPORT

3–9. General

The data in this section are for use as general guides. Their application will vary with local field conditions in each specific tactical situation, based on the recommendation, after reconnaissance, of the unit engineer charged with the task. FM 5–1 contains further details on engineer operations in the field.

3–10. Roads and Bridges

a. Load Capacity of Civilian Bridges. Peacetime design includes high safety factors for unusual loads and deterioration. As a guide for military operations, the assumption is that the ordinary civilian bridge in good condition will carry twice the rated civilian capacity when restrictions are placed on the speed and spacing of vehicles and on the number of lanes in use. However, an engineer officer should first analyze the bridge capacity.

b. Road Capacity. The capacity of the bridge usually limits the capacity of the road thereon.

c. Marking Bridges and Vehicles.

(1) Circular and rectangular signs mark bridges. Circular signs, by means of symbols and numerals, indicate the one-way capacity classification of a bridge, wheeled or tracked class or both, and the capacity classes of a two-lane bridge when used as either a double- or a single-lane bridge. Vertical arrows under two respective one-way and two-way class numbers mark the capacity of two-way bridges. When dual classification of bridges is to be posted, the wheeled and tracked classes are denoted by silhouette-type symbols together with the appropriate class numbers. When desired, rectangular signs located beneath the bridge class signs indicate any other information concerning the bridge, such as height or width limitations. Any bridge class that is a fraction of a whole number is *reduced* to the next *lower* whole number, e.g., 22.7 is reduced to 22. Figure 3–2 illustrates types of bridge markings.

(2) Vehicles are marked with class numbers that represent their effect on the bridge when they cross it; the gross weight of the vehicle and the weight distribution determine this effect. Classification numbers are assigned to all single vehicles in military use having a gross weight in excess of 3 tons and to all trailers in military use having a rated payload of 1½ or more tons. All

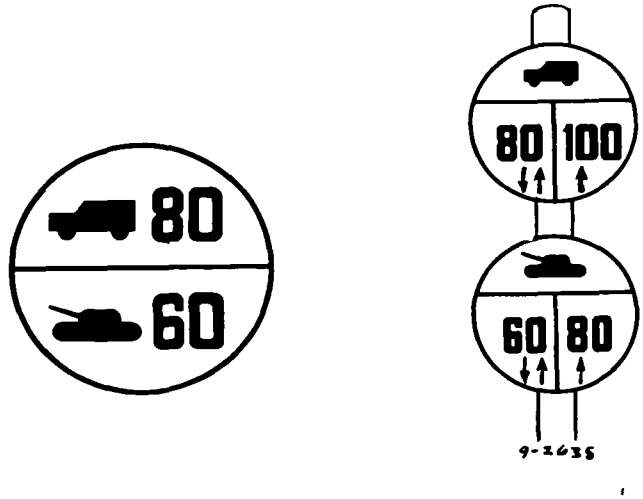

Figure 3–2. Types of bridge classification signs.

single vehicles in excess of 3-ton gross weight carry front class signs only; a side vehicle classification sign is placed on the right side of classified *towing vehicles* and *trailers* of 1½ or more tons. For *combination* vehicles, each leading vehicle in the combination carries a front vehicle classification sign inscribed with the classification number of the combination with the letter C in red above the classification number. Also, each vehicle in the combination carries a side vehicle classification sign inscribed with its classification as a single vehicle. When vehicles and the vehicles that they are towing are less than 30 meters apart and are on one bridge span at the same time, they are classed as combination vehicles. The classification number of nonstandard combinations of vehicles may be obtained as follows:

Combination classification
$= 0.9\ (A + B)$ of $A + B < 60$ or
$= (A + B)$ if $A + B \geq 60$, when—
A = class of first vehicle
B = class of second vehicle

This combination classification number is shown on a temporary front sign. Special-purpose vehicles are equipped with front classification signs or side classification signs, depending on their means of propulsion. FM 5–36 provides more detailed information.

d. Engineer Road Construction. Table 3–13 shows effective man-hours required for personnel of the engineer construction battalion to clear. grub, strip, and rough grade 1 mile of combat road, pioneer type.

Table 3–13. Road Construction (Man-Hours)

	1	2	3
1	Terrain	One-way (4.2m (14 ft))	Two-way (7.3m (24 ft))
2	Flat—prairie	1,500	2,200
3	Rolling	2,000	2,800
4	Hilly—forested	2,500	3,300

3–11. River- and Gap-Crossing Equipment

a. Table 3–14 shows the distribution of river- and gap-crossing equipment organic to divisional and nondivisional units. The infantry division engineer battalion is issued equipment listed either in column 3 or in column 4. The armored and infantry (mechanized) division engineer battalions are issued equipment listed either in column 5 or in column 6. If conventional bridging is issued, the unit is authorized either M4T6 (LIN C25072) or class-60 (LIN C25346) equipment but not both.

Table 3–14. Distribution of River- and Gap-Crossing Equipment in Divisional and Nondivisional Engineer Combat Units

1	1	2	3	4	5	6	7	8	9	10	11	12	13	14
1	LIN	Item	Inf div engr bn (TOE 5–155H)		Armd and inf (mech) div engr bn (TOE 5–145H)		Abn div engr bn (TOE 5–25G)	Engr fltbrg co (TOE 5–78G)	Engr pnl brg co (TOE 5–77G)	Engr aslt brg co, mbl (TOE 5–64G)	Engr co, sep inf bde (TOE 5–107G)		Engr co, sep armd and inf (mech) bde (TOE 5–127G)	
			MAB	Convl	MAB	Convl					MAB	Convl	MAB	Convl
2	B83582	Bt, brg erection, inboard eng, aluminum gas-driven, 27-ft long		8		8		10		3		4		4
3	B83856	Bt, ldg, inflatable, aslt cft, nylon-cloth, 15-man	18	18	18	18		70			9	9	9	9
4	B84404	Bt, recon, pneumatic, 3-man [1]	28	28	32	32	11	10		3	6	6	6	6
5	C20414	Brg, armd-veh-launched, scissor-type, cl 60, aluminum, 60-ft long	6	6	6	6					3	3	3	3
6	C22058	Brg erection set, fxd-brg, highway, pony truss, ptbl, pnl-widened roadway, Bailey-type							1					
7	C23017	Brg, fxd, highway, pony truss, ptbl, pnl-widened roadway, Bailey-type							1					
8	C24935	Brg, fltg, ft						1						
9	C25072	Brg, fltg, highway, aluminum-deck, balk-superstructure		4		4		5				2		2
10	C25346	Brg, fltg, highway, cl 60, 135-ft						5				2		2
11	C25757	Brg, fltg, raft sec, lt, tac	2	2	2	2		6			1	1	1	1
12	C26305	Brg erection set, fltbrg, cl 60, steel- or aluminum-deck, balk- superstructure		4		4		5				2		2
13	H38787	Ferry conversion set, raft, inf spt	2	2	2	2		6			1	1	1	1
14	L43664	Lchr, M60-series, tk chassis, trans 40- and 60-ft brg, type cl 60	4	4	4	4					2	2	2	2
15	N34334	Outboard mtr, gas, 25-bhp	8	8	8	8		24			4	8	8	4
16	U58875	Superstructure, end bay for MAB	8		8					12	4		4	
17	U58878	Superstructure, interior bay for MAB	16		16					24	8		8	

[1] Engr bn, ambl div (TOE 5–215T), has 2 bt; engr cbt bn, army or corps (TOE 5–35G), has 15 bt; engr co, sep abn bde (TOE 5–137G) and sep lt inf bde (TOE 5–207G), has 3 bt ea.

Table 3-15. Characteristics of Assault Boats

1	1 River-crossing means	2 Crew (engr)	3 Maximum load (in addition to crew)	4 Maximum stream velocity (m per sec)	5 Time in minutes for round trip across stream (width) 90m	6 150m	7 300m
	Plastic assault boat:						
2	Paddled	3 men	12 riflemen with individual equipment	1.2	4	6	10
3	25-hp outboard motor, propelled	2 men	12 riflemen with individual equipment	1.5	3	4	5
4		2 men	7 riflemen with individual equipment	2.5	3	4	5
5	Employed as storm boat	1 man	5 riflemen with individual equipment	3.2	3	4	5
	Pneumatic assault boat:						
6	Paddled	3 men	12 riflemen with individual equipment	1.5	4	6	10
7	25-hp outboard motor, propelled	2 men	12 riflemen with individual equipment	3.5	-------	4	5

b. Table 3–15 lists the characteristics of assault boats. For details, see FM 31–60.

c. Table 3–16 lists the characteristics of rafts and ferries. Various size rafts and ferries capable of carrying light tactical vehicles or the heaviest division loads can be constructed from standard river-crossing equipment. When required, preparation or construction of roads and approaches *normally is more time consuming* than that in raft construction. Site preparation time, rather than raft or ferry construction time, normally is the deciding factor in arriving at operational times for rafts or ferries.

Note. Commanders and staff planners must exercise caution in using the construction times listed in table 3–16 (colm 5) to determine operational times for rafts.

d. Table 3–17 shows characteristics of floating bridges. When roads and approaches are required, their preparation or construction *normally is more time consuming* than that in bridge construction.

Note. Commanders and staff planners must exercise caution in using the construction times listed in table 3–17 (colm 3–5) to determine operational times for bridges.

(1) *Light tactical bridge.* Light tactical bridging equipment can be used to assemble either rafts or floating bridges. The bridge can carry up to class-16 loads in currents not exceeding 1.6 meters per second. One set of this equipment provides 13 meters of normal bridging. Sets for constructing light tactical bridges or rafts are located in all float bridge companies except mobile floating assault bridge-ferry (US) (MAB)-equipped units in corps or field army.

(2) *M4T6 bridge.* This standard floating bridge is organic to all float bridge companies except those equipped with the MAB. The M4T6, which can be erected by hand, consists of a continuous roadway of aluminum-alloy deck balk supported by 24-ton pneumatic floats. This bridge provides a means for crossing divisional, corps, and field army loads.

(3) *Class-60 bridge.* The class 60-bridge may be issued in lieu of M4T6 bridging equipment. This bridge must be erected using a crane. It is supported on the same 24-ton pneumatic floats as the M4T6 bridge. The class-60 bridge provides a means for crossing divisional, corps, and field army loads.

(4) *MAB.* The MAB is designed for rapid assembly as either a ferry or a floating bridge. The bridge companies of the armored, infantry, and infantry (mechanized) divisions and the engineer assault bridge company, mobile (TOE 5–64), are equipped with this type of bridging. Each bridge vehicle enters the water from march column, without prior preparation, and can be joined together to form a 149-meter bridge or four six-unit rafts.

(5) *Amphibious river-crossing equipment (French).* The amphibious river-crossing equipment (ARCE) can be used for the rapid assembly of either ferries or floating bridges. The capabilities of the ARCE are parallel to those of the US-designed MAB ((4) above); however, additional time is required to prepare the ARCE for entry into the water. Pneumatic floats must be placed on each side of the bridge and ramp units and then inflated to provide flotation. The bridge companies of the armored, infantry, and infantry (mechanized) divisions in Europe are equipped with this type of bridging. One major difference between the ARCE and the MAB should be noted: the ARCE ramp unit serves only to transport the ramp on land and in the water until the ramp is

	1	2	3	4	5	6	7	8	9	10	11	12	13	14	15	16	17	18
1	Type of raft or ferry	No. of pontoons or floats	Length (m)		Construction time (min)[b]	Construction party	Operating crew	Class and number of power units needed[c]								Type of power unit required	Transportation required. (For raft equip only. Additional needed for const equip and trps.)	
			Overall including ramps	Available for loading[a]				Normal crossing				Risk crossing						
								Stream velocity (m per sec)										
								1.0	1.6	2.3	3.0	1.0	1.6	2.3	3.0		No. of units	Unit
2	Light tactical raft without articulators	4 (3 bay)	14.3	10.0	30	1 plt	1 sqd and outboard motor operators	16 / 16 / 1	16 / 16 / 1	13 / 13 / 2	4 / 4 / 4	20 / 20 / 1	20 / 20 / 1	18 / 18 / 2	8 / 8 / 4	25-hp outboard motor[d]	2	2½-ton cargo truck with 2½-ton pole trailer
		5 (5 bay)	21.1	16.8	35			16 / 16 / 1	15 / 15 / 1	12 / 12 / 2	6 / 6 / 4	19 / 19 / 1	18 / 18 / 1	16 / 16 / 2	9 / 9 / 4		2	
		6 (5 bay)	21.1	16.8	40			18 / 18 / 1	18 / 18 / 1	18 / 18 / 3	13 / 13 / 4[e]	22 / 22 / 1	22 / 22 / 2	22 / 22 / 3	18 / 18 / 4[e]		2	
	Light tactical raft with articulators	4 (3 bay)	18.0	10.0	30			12 / 12 / 1	12 / 12 / 1	12 / 12 / 2	4 / 4 / 3	14 / 14 / 1	14 / 14 / 1	14 / 14 / 2	9 / 9 / 4		2	
		4 (4 bay)	21.4	13.4	35			10 / 10 / 1	10 / 10 / 1	10 / 10 / 2	2 / 2 / 3	12 / 12 / 1	12 / 12 / 1	12 / 12 / 2	6 / 6 / 4		2	
		5 (5 bay)	24.8	16.8	40			9 / 9 / 1	9 / 9 / 1	9 / 9 / 2	6 / 6 / 4	11 / 11 / 1	11 / 11 / 1	11 / 11 / 2	9 / 9 / 4		2	
		6 (4 bay)	21.4	13.4	40			13 / 13 / 1	13 / 13 / 1	13 / 13 / 2	12 / 12 / 4[e]	15 / 15 / 1	15 / 15 / 1	15 / 15 / 2	15 / 15 / 4[e]		2	

1-2260

See footnotes at end of table.

Table 3–16. Characteristics of Rafts and Ferries

1	2	3	4	5	6	7	8	9	10	11	12	13	14	15	16	17	18
1	Type of raft or ferry	No. of pontoons or floats	Length (m)		Construction time (min)[b]	Construction party	Operating crew	Class and number of power units needed[c]								Type of power unit required	Transportation required. (For raft equip only. Additional needed for const equip and trps.)	
			Overall including ramps	Available for loading[a]				Normal crossing				Risk crossing						
								Stream velocity (m per sec)										
								1.0	1.6	2.3	3.0	1.0	1.6	2.3	3.0		No. of units	Unit
3	Class 60	4 Norm	28.2	15.5	70[f] 30[g]	1 plt[f g]	1 sqd and power unit operators	45 40 / 1	45 40 / 1	45 40 / 2	40 35 / 2	55 50 / 1	55 50 / 1	55 50 / 2	50 45 / 3	27-ft bridge erection boat[h]	5	5-ton bridge truck
		5 Reinf	28.2	15.5	80[f] 35[g]			60 55 / 1	60 55 / 1	55 50 / 2	50 45 / 4	70 60 / 1	70 60 / 1	65 60 / 2	60 55 / 4		6	
		6 Reinf	28.2	16.5	90[f] 50[g]			75 65 / 1	75 65 / 1	55 65 / 2	65 60 / 4	90 80 / 1	90 80 / 1	90 80 / 2	80 70 / 4		6	
4	M4[i j] (limited standard)	4	26.5	15.7	70[f]	1 plt	1 sqd and power unit operators	55 50 / 1	55 50 / 1	55 50 / 1	55 50 / 1	60 55 / 1	60 55 / 1	60 55 / 1	60 55 / 1	27-ft bridge erection boat[h]	5	2½-ton bolster truck with 2½-ton bolster trailer
		6 Reinf	26.5	15.7	80[f]			75 70 / 1	75 70 / 1	75 70 / 1	70 65 / 2	80 75 / 1	80 75 / 1	80 75 / 1	80 75 / 2		6	
		7 Reinf	26.5	15.7	85[f]			90 85 / 1	90 85 / 1	90 85 / 1	85 80 / 3	95 90 / 1	95 90 / 1	95 90 / 1	95 90 / 3		7	
5	M4T6[i]	4	26.5	15.7	90	1 plt	1 sqd and power unit operators	55 50 / 1	55 50 / 1	50 45 / 2	40 35 / 3	65 60 / 1	65 60 / 1	60 55 / 2	50 45 / 3	27-ft bridge erection boat[h]	5	5-ton bridge truck
		5 Reinf	27.1	15.3	100			60 60 / 1	60 60 / 1	60 60 / 2	50 45 / 3	75 70 / 1	75 70 / 1	75 70 / 2	70 65 / 3		6	
6	Mobile floating assault bridge-ferry (MAB) (U.S.)	0/2[k]	22.5	8.5	6	None[l]	Amphibious vehicle crews	36/36 / 36	36/36 / 36	36/36 / 36						Self-contained power	2	Self-contained
		1/2[k]	30.5	16.5	8			47/47 / 54	47/47 / 54	47/47 / 54							3	
		2/2[k]	38.4	24.4	10			60/62 / 72	60/62 / 72	55/55 / 72							4	
		3/2[k]	46.3	32.4	12			60/62 / 90	60/62 / 90	60/62 / 90							5	
		4/2[k]	54.2	40.4	12			60/62 / 108	60/62 / 108	60/62 / 108							6	
7	Amphibious river-crossing equipment (ARCE) (French)	2/–[k]	32.0	17.2	15	None[l]	1 man and amphibious vehicle crews	45/50 / 55	45/50 / 50	40/45 / 45						Self-contained power	4	Amphibious bridge vehicles plus two amphibious ramp carriers or one 5-ton tractor with 25-ton low-bed trailer
		3/–[k]	40.0	25.2	20			60/65 / 88	60/65 / 80	55/60 / 71							5	
		4/–[k]	48.0	33.2	25			60/65 / 108	60/65 / 99	55/60 / 89							6	
		5/–[k]	56.0	41.2	31			60/65 / 135	60/65 / 121	55/60 / 108							7	

See footnotes at end of table.

1-2260

Table 3–16.—Continued

	1	2	3	4
1	Operating characteristics of rafts and ferries	Stream width (m)		
		75	150	300
	No. of round trips per hr in currents of 1.6 m per sec in daylight (reduce 50 percent for night or adverse conditions):	Trips per hr		
2	Light tactical raft	8	6	4
3	Class-60 raft	6	4	2
4	M4T6 raft	8	6	4
5	ARCE/MAB	8	6	4
6	No. of rafts that can be used efficiently at one time	1	2	3

[a]Measured from outside edge to outside edge of end pontoons or float saddle beams, except mobile assault ferry, which is measured from ramp joint to ramp joint.

[b]Includes unloading and assembly times only; does not include time for preparation of landing sites or construction of access roads. Times are based on use of trained personnel and no delays.

[c]Capacities are based on loading rafts with center of gravity of loads 6 inches downstream of raft centerline and on properly inflated floats, or conversion from highway travel condition to water entry configuration for ARCE ferry.

[d]27-ft erection boat may be used when pusher connector is lashed to pontoons.

[e]Must be launched upstream of far-shore exit, since power units will not counteract velocity of stream when the raft is loaded.

[f]Truck-crane or equivalent required for assembly time.

[g]Complete bays preassembled in rear area and launched directly from transporting trailer into water at assembly site.

[h]One 19-ft bridge erection boat may be used in current not more than 1.6 m per sec. In 1.6-m-per-sec or more current, two 19-ft boats may be substituted for one 27-ft boat.

[i]Roadway width consists of 18 balk between curbs in 22-balk deck.

[j]Extreme caution is required in loading and unloading vehicles weighing more than 60 tons.

[k]No. of interior bays/no. of ramp bays.

[l]Exclusive of amphibious vehicle crews.

LEGEND

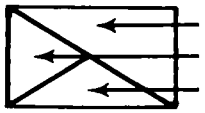

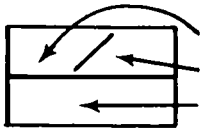

Table 3-16.—Continued

	1		2	3	4	5	6	7	8	9	10	11	12	13	14	15	16	17	18	19	20	21	22	23	24	25
1	Type of bridge		Transportatioo required[a]	Constructioo party[b] / Construction time[c] (hr)			Maintenance crew	Load class[d]																		Traffic capacity and vehicular distance for safe crossing in daylight (except as otherwise noted)[b]
				Stream width (m)				Safe crossing (posted capacity)[e]						Caution crossing[f]						Risk crossing[g]						
								Stream velocity (m per sec)																		
				Up to 80	80–160	160–325		1.0	1.6	2.3	2.6	3.0	3.6	1.0	1.6	2.3	2.6	3.0	3.6	1.0	1.6	2.3	2.6	3.0	3.6	
2	Foothridge, aluminum		1 2½-too truck and 1 2½-ton pole trailer per 77.4 meters of bridge	1plt / ⅓–½	1 plt / ½–⅝	...	1 sqd	← Safe →																		Daylight: 75 men per mn Night: 40 men per min at 2-pace distance[i]
3	Light tactical bridge		2 2½-ton trucks and 1 2½-too pole trailer per 14.4 meters of bridge	1 plt / 1–1½	2 plt / 1½–2½	...	1 sqd	16	16	13	11	8	2	18	18	15	12	9	3	21	21	17	14	11	5	400 vehicles per hr; 30 meters' distance between vehicles[j]
4	M4T6 floating bridge[k]	Normal	1 5-ton truck per 4.9 meters of bridge	1 co / 2–3	2 co / 3–5	2 co to 1 bn / 5–10	1 sqd	50/55	45/55	40/50	35/45	30/40	25/30	60/61	58/59	54/55	49/51	45/47	35/37	68/69	66/67	62/63	59/60	54/56	43/45	400 vehicles per hr; 30 meters' distance between vehicles[j]
		Reinforced	1 5-ton truck per 3.3 meters of bridge					75	75	70/75	65/70	55/60	27/30	80	80	79	73	66/67	43/45	90	90	90	87	81	59/60	
5	Class-60 floating bridge	Normal	1 5-ton bridge truck per 4.9 meters of bridge	1 co / 2–3	2 co / 3–5	2 co to 1 bn / 5–10	1 sqd to 1 plt[m]	60/65	55/65	45[l]/55	40/50	35/45	22/25	65/70	62/67	56/61	52/56	45/49	34/37	75/79	72/77	67/72	62/67	57/62	46/50	400 vehicles per hr; 30 meters' distance between vehicles[j]
		Reinforced	1 5-too bridge truck per 4.9 meters of bridge	1 co / 3–4	2 co / 4–7	2 co to 1 bn / 7–12		65	65	65	65	65	30/35	75	75	75	75	75	47/51	85	85	85	85	85	70/74	
6	M4 floating bridge (limited staodard)	Normal[n]	1 2½-ton bolster truck and 1 2½-ton bolster trailer per 4.9 meters of bridge	1 co / 2–3	2 co / 3–5	2 co to 1 ho / 5–10	1 sqd to 1 plt[m]	60	60	45/50	45	30/35	18/20	68	65	58/59	52/53	44/46	29/31	72	68	61/62	58/59	53/54	37/39	
		Reinforced[o]	1 2½-ton bolster truck and 1 2½-too bolster trailer per 3.3 meters of bridge	1 co / 3–4	2 co / 4–7	2 co to 1 bn / 7–12		95	95	75/80	60/65	45/50	24/27	100	100/99	88/85	75/74	62	35/37	105/100	105/100	101/96	88/85	74/73	45/46	
7	Mobile floatng assault bridge-ferry (MAB) (U.S.)		No. of interior units = bridge length (m) – 20 / 7.92 (plus 2 ramp units)	(P) / ½–⅔	(P) / ⅔–1	(P) / 1–2	(P)	62/62	62/62	55/55	55/55	(Ratings are tentative)															400 vehicles per hr, 30 meters' distance between vehicles[j]
8	Amphibious river-crossing equipment (ARCE) (French)		1 amph hrg veh per 8.0 meters of brg exclusive of 8.0 meters' ramp at each end of brg and 2 amph ramp carriers or 1 5-ton trac w 25-too low-bed tlr	(P) / 1	(P) / 1½–2	(P) / 1 ¾–3	(P)	60/65	60/65	55/60	55/60	(Ratings are tentative)															400 vehicles per hr, 30 meters' distance between vehicles[j]

1-2160

[a] Transportation for bridge equipment only. Additional needed for any construction equipment required and for troops.

[b] Average for trained troops and continuous daylight assembly. Allowances are required for specific situations and the longer spans.

[c] Includes unloading and assembly times in daylight only. Does not include time for construction of access roads, assembly sites, abutments, or anchorages. Does not include time for conversion from highwey traval condition to water entry configuration for the ARCE units. Time is based on use of trained troops and no delays. Average time with 2 assembly sites.

[d] Based on abutment at levels within 12 inches of floating bridge deck level.

[e] Vehicle anywhere on bridge deck between curbs. Speeds up to 40 kmph permitted, but 24 kmph recommended. Vehicle spacing is 30 meters.

[f] Center of vehicle within 12 inches of bridge centerline. Maximum speed is 13 kmph. Vehicle spacing is 50 meters. No stopping, accelereting, or gear shifting.

[g] Center of vehicle within 9 inches of bridge centerline with guide. Maximum speed is 5 kmph. One vehicle on bridge. No stopping, accelerating, or gear shifting.

[h] Traffic capacities are for all traffic forward or rearward.

[i] Reduce capacity 20 percent for currents of from 3 to 3.6 m per sec.

[j] Based on favorable approach and ramp-angle conditions.

[k] Ratings based on 18-balk curbs (166½ in) to 22-balk-wide superstructure.

[l] 60-ton tanks having tread widths of 143 inches or more may cross safely up to 2.3 m per sec.

[m] Depending on length of bridge and general conditions.

[n] Ratings based on use of reinforcing pontoon in end span and 18 balk between curbs (166½ in) in 22-balk-wide superstructure.

[o] Ratings based on use of double deck and span, 100-percent reinforced floating section, and 20 balk between curbs (185 in) in 24-balk-wide superstructure.

[p] Only MAB/ARCE crews are required, plus bank and access road preparation, as needed.

LEGEND

Class for wheeled and tracked vehicles.

Class for wheeled vehicles.

Class for tracked vehicles.

Table 3–17. Characteristics of Floating Bridges

connected to the exterior bridge unit. When the ramps are connected, the ramp carriers disengage and have no ferry load-carrying capability. A four-unit ARCE ferry uses four bridge units and two ramp units. When the MAB is used, a four-unit ferry consists of two interior bays and two end bays.

(6) *M4 floating bridge.* This limited-standard bridge consists of a continuous roadway of aluminum-alloy deck balk supported by aluminum pontoons. Shore connections are made by resting the end balk on abutment sills on the banks or by using one or more trestle spans. Balks are pinned to removable pontoon gunwales, permitting the pontoons to be replaced without disturbing the bridge deck.

e. Table 3–18 provides construction times for M4T6 and class-60 floating bridges. All bridges are constructed at prepared sites with no approach work. An overhead cable and bridge-line anchorage are constructed with each bridge. Hours shown are not working hours only, but straight-through hours because this is normal for bridge building. Estimated reinforcement times for 1,000-foot spans are feasible because this construction is normally a battalion-size job. The size of the maintenance crew depends on the weather and stream conditions. The crew shown is the minimum number of troops under favorable conditions. The figures in the table are based on records of actual experiences. Examination of a time-versus-bridge-length graph will possibly explain some of the incongruities of the figures quoted.

f. Table 3–19 provides the vehicle classification capacities for fixed spans constructed from floating bridge components. In columns 3 through 17, the figure to the left of the divider (/) pertains to wheeled vehicles; the figure to the right pertains to tracked vehicles.

g. Table 3–20, based on information in TM 5–312, provides load capacity data for fixed highway bridges. In columns 2 through 22, the figure to the left of the divider (/) indicates the wheeled load class; the figure to the right indicates the tracked load class.

h. Table 3–21, based on information in TM 5–373, lists the characteristics of railway bridge equipment.

i. Table 3–22, based on information in TM 5–312, provides logistic and construction data for military fixed highway bridges. In line 5, columns 2 through 8, the figure to the left of the divider (/) indicates the number of 5-ton dump trucks; the figure to the right indicates the number of 2½-ton utility pole trailers.

3–12. Field Fortifications

a. Priority of Work. The order in which the various defensive measures are to be performed is expressed as priorities. The assignment of priorities does not prevent simultaneous work on several tasks. After the location of combat emplacement has been fixed. the normal priority is—

(1) Establishing security.

(2) Positioning weapons.

(3) Clearing fields of fire, removing objects, masking observation, and determining ranges to probable target location.

(4) Providing signal communication and observation systems.

(5) Preparing weapon emplacements and individual positions, to include overhead cover, and camouflaging them concurrently.

(6) Laying minefields and preparing important demolitions.

(7) Preparing routes for movement and for supply and evacuation.

(8) Preparing alternate positions.

(9) Preparing obstacles (other than minefields) and less vital demolitions.

(10) Preparing nuclear, biological, and chemical protective shelters, as required.

(11) Preparing deceptive installations in accordance with deception plans of higher headquarters.

b. Works. The figures given in tables 3–23 through 3–26 are for daylight; for work at night, increase labor requirements by 50 percent.

(1) *Personnel and weapon emplacements.* Table 3–23 lists the characteristics of personnel and individual weapon emplacements. Table 3–24 lists the characteristics of crew-served infantry weapon emplacements. Data in these tables are taken from FM 5–15, which should be used if greater detail is required.

(2) *Man-hour requirements.* Four man-hours' labor is required for clearing 100 square yards of brush and a few trees up to 12 inches in diameter; for clearing brush only, 2 man-hours' labor is required.

(3) *Barbed-wire obstacles.*

(*a*) In estimating material requirements, the minimum length of tactical wire entangle-

*Table 3–18. Construction Times for Standard Heavy Floating Bridges**

1	1	2	3	4	5	6	7	8
1	Type of bridge	Type of construction	Approximate construction time (hr)				Construction party	Maintenance crew
			Stream width					
			150-ft	250-ft	500-ft	1,000-ft		
2	M4T6	Norm	2	3	5	50	1 fltbrg co plus 1 engr cbt co	½ sqd up to 500 ft; 1 sqd more than 500 ft.
		Reinf	3	4½	10		1 fltbrg co plus 1 engr cbt co	½ sqd up to 500 ft; 1 sqd more than 500 ft.
3	Cl 60	Norm	2½	3½	5	42	1 fltbrg co plus 1 engr co	½ sqd up to 500 ft; 1 sqd more than 500 ft.
		Reinf	3½	5	10		1 fltbrg co plus 1 engr cbt co	½ sqd up to 500 ft; 1 sqd more than 500 ft.

*Does not include time necessary to clear site or do approach work.

Table 3–19. Load Capacities of Fixed Spans Constructed From Floating Bridge Components

a. Class 60 Bridge

1	1	2	3	4	5	6	7	8	9	10	11	12	13
1	Type of bridge	Type of crossing	Capacities for specified clear span (ft)										
			24	26	28	30	32	34	36	38	40	50	60
2	Cl 60, fxd-span cap	Norm	100/120	95/120	80/115	65/105	60/95	55/85	50/75	45/65	40/60	30/30	20/22
		Caution	100/120	100/120	87/120	75/100	70/105	63/90	58/81	53/75	50/68	36/36	22/25
		Risk	100/120	100/120	100/120	90/120	85/120	75/110	68/100	56/90	60/83	45/50	28/30

b. M4T6 Bridge

1	1	2	3	4	5	6	7	8	9	10	11	12	13	14	15	16	17
1	Type of bridge	Type of crossing	23-ft 4-in. span	Capacities for specified span length and ratio of deck to roadway widths													
				30-ft 0-in. span			38-ft 4-in. span				45-ft 0-in. span						
			22 / 18	22 / 18	22 / 16	24 / 18	22 / 18	22 / 16	24 / 18	26 / 18	20 / 16	22 / 18	22 / 16	24 / 18	24 / 16	26 / 18	26 / 16
2	M4T6 balk, fxd-span cap.	Norm	100/120	65/85	70/90	70/90	35/45	40/50	45/55	50/65	24/25	24/25	30/30	30/30	35/40	35/40	40/45
		Caution	100/120	80/100	80/100	85/105	51/70	51/70	55/75	50/82	35/40	40/46	40/46	43/51	43/51	46/56	46/56
		Risk	100/120	90/110	90/110	95/115	57/78	57/78	62/85	67/90	40/47	45/54	45/54	49/60	49/60	53/66	53/66

Table 3–20. Dual Classification of Panel Bridge, Bailey-Type, M2 (150-inch Roadway) Class, by Type of Construction and Type of Crossing-Posting Classification

1	1	2	3	4	5	6	7	8	9	10	11	12	13	14	15	16	17	18	19	20	21	22
1		Panel bridge																				
		Bailey-type, M2																				
		Single-single			Double-single			Triple-single			Double-double			Triple-double			Double-triple			Triple-triple		
		Norm	Caution	Risk	Norm	Caution	Risk	Norm	Caution	Risk	Norm	Caution	Risk	Norm	Caution	Risk	Norm	Caution	Risk	Norm	Caution	Risk
2	30	30/ 30	42/ 37	47/ 42																		
3	40	24/	36/ 34	40/ 36																		
4	50	24/	33/ 31	36/ 35	75/ 70	83/ 86	88/ 84															
5	60	20/	30/ 29	33/ 32	65/ 65	77/ 73	85/ 79															
6	70	20/	24/	30/ 30	60/ 60	68/ 69	78/ 75															
7	80	16/	20/	24/	50/ 55	60/ 60	66/ 64	85/ 80	95/ 90	100/ 90												
8	90	12/	16/	19/	40/ 45	50/ 50	55/ 55	65/ 65	74/ 75	82/ 82												
9	100	8/	12/	14/	30/ 30	37/ 39	42/ 44	50/ 55	57/ 60	64/ 66	80/ 80	86/ 90	96/ 90									
10	110				20/	30/ 32	34/ 36	35/ 40	47/ 49	52/ 54	65/ 70	72/ 76	80/ 83	90/ 90	100/ 90	100/ 90						
11	120				16/	23/	27/ 30	30/ 35	36/ 41	43/ 45	45/ 55	57/ 61	64/ 68	75/ 80	83/ 90	91/ 90						
12	130				12/	18/	21/	20/	31/ 33	35/ 38	35/ 45	47/ 50	53/ 56	55/ 60	65/ 72	74/ 80	70/ 80	80/ 90	90/ 90			
13	140				8/	14/	17/	16/	24/	29/ 31	30/ 35	39/ 42	44/ 48	45/ 55	57/ 62	64/ 70	70/ 70	80/ 90	88/ 90			
14	150							12/	18/	22/	24/	32/ 35	36/ 40	35/ 45	47/ 51	54/ 58	60/ 60	77/ 85	85/ 90			
15	160							8/	15/	17/	16/	25/	30/ 33	30/ 35	37/ 41	45/ 48	55/ 55	69/ 78	80/ 89	80/ 75	100/ 90	100/ 90
16	170							4/	10/	13/	12/	19/	24/	20/	31/ 34	36/ 40	45/ 50	57/ 64	64/ 74	70/ 70	80/ 90	90/ 90
17	180										8/	15/	18/	16/	24/	29/ 32	35/ 45	48/ 53	55/ 60	55/ 60	66/ 75	77/ 87
18	190													12/	18/	22/	30/ 35	39/ 43	46/ 51	45/ 55	59/ 66	68/ 77
19	200																20/	32/ 36	38/ 43	35/ 40	48/ 52	55/ 62
20	210																16/	25/	31/ 36	24/	38/ 43	46/ 51

Table 3–21. Characteristics of Railway Bridge Equipment

1	1	2	3	4	5	6	7	8	9	10
	Type of bridge	Bridge sets		Shipping data		Maximum speed at Cooper's E–45 loading (mph)	Construction effort (man-hr)	Erection equipment		Steel trestle units
		Procurement	Theater issue	Weight (STON)	Cubage (MTON)			Special sets	Components	
2	Through truss	123-ft span	92-ft 3-in. span			40	No data aval	Sp set for spans 92 ft 3 in. to 123 ft.	Lowering frames, erection derrick, misc equip, equip for sp methods.	T-type: piers 2 ft 8 in. in 1-ft 4-in. increments. For brg seatings, see TM 5–374.
			102-ft 6-in. span			40				
			112-ft 6-in. span			40				
			123-ft 0-in. span	133.66	131.00	40				
			133-ft 3-in. span			40	No data aval 9,000 11,294	Sp set for spans 133 ft 3 in. to 153 ft 9 in.		
			143-ft 6-in. span			20				
			153-ft 9-in. span			10				
		Set A (end posts from sloped to vertical).		1.68	0.50	NA	NA	Sp set consisting of erection frame and erection gantry.		
		Set B—(end posts from square to skew).	Set B	1.77	1.34					
		Set C—(connect 2 spans with sloped end posts).	Set C	0.18	0.14					
		Set D—(connect 2 spans with vertical end posts).	Set D	0.27	0.20					
		Set K—(lengthen span to 153 ft 9 in.)	Set K	38.84	31.78					
3	Wide-flange beam. 27 in.	22-ft span (2 beams)	No data aval	6.10	4.80	40	100	None	No data aval	Various.
		34-ft span (4 beams)		14.40	12.30		150			
		40-ft span (6 beams)		19.00	16.60		210			
	36 in.	35-ft span (2 beams)		12.40	10.50	40	170			
		45-ft span (4 beams)		28.40	24.70		470			
		57-ft span (6 beams)		39.90	35.00		540			
4	Plate girder, 48-in.	56-ft span (girders)	No data aval	31.50	24.10	40	370	None	No data aval	Various.
		80-ft span (4 girders)		66.90	51.80		660			
		100-ft span (6 girders)		117.50	88.60		1,200			

Table 3-22. Logistic and Construction Data for Military Fixed Highway Bridges

1	Item	2	3	4	5	6	7	8	9	10	11	12	13	14
		Panel bridge, Bailey-type, M2						Beam bridges					Truss and girder bridges	
		Effective length of bay, 10 ft						I-beam stringers			WF-beam stringers		Truss	Girder
		Single truss single story	Double truss single story	Triple truss single story	Double truss double story	Triple truss double story	Double truss triple story	Triple truss triple story	30-ft span	60-ft span	27-in. depth	36-in. depth	90-ft span	48-in. depth
2	Weight per bay (STON)	2.76	3.41	4.01	4.66	5.88	6.46	8.29	12.9	35.3	31.2	116.0	49.9	177.0
3	Cubage per bay (MTON)	9.00	11.00	13.00	14.00	18.00	20.00	26.00	15.5	36.0	28.5	105.0	70.7	142.4
4	Type of issue (cl)	II	II	II	II	II	II	II	IV	IV	IV	IV	IV	IV
5	Transportation per bay	3.40/ 1.0	2.20/ 0.70	2.60/ 0.70	3.00/ 0.70	3.80/ 0.90	3.70/ 0.80	5.50/ 0.90	No data aval.		No data aval.		No data aval.	
6	Man-hours to erect 1 bay	58.00	37.00	49.00	63.00	98.00	161.00	281.00	No data aval.		No data aval.		No data aval.	

Table 3-23. Characteristics of Personnel and Individual Weapon Emplacements

1	1	2	3	4	5	6	7	8	9	10	11	12	13	14	15	16	17	18
		Protection afforded				Total construction time in man-hours for construction with D-handle shovels and ordinary carpentry tools					Weight and volume of materials							
											Revetment materials for cover support only				Complete revetment			
						Revetment materials for cover support only		Complete revetment			Corrugated metal construction		Sized lumber construction		Corrugated metal construction		Sized lumber construction	
1	Type of emplacement or shelter	Fortification protection factor (NUCWPN)	Thermal effects (NUCWPN)	Tracked vehicles	Artillery fragments	Corrugated metal construction	Sized lumber construction	Corrugated metal construction	Sized lumber construction	No revetment materials used	Weight (lb)	Volume (cu ft)	Weight (lb)	Volume (cu ft)	Weight (lb)	Volume (cu ft)	Weight (lh)	Volume (cu ft)
2	Improved crater	90	Fair	Virtually none.	Better than in open.	NA	NA	NA	NA	0.5	NA	NA	NA	NA	NA	NA	NA	NA
3	Skirmishers trench	95	Fair	Virtually none	Better than in open.	NA	NA	NA	NA	0.5	NA	NA	NA	NA	NA	NA	NA	NA
4	Prone emplacement	85	Good	Virtually none.	Fair	NA	NA	NA	NA	1.5	NA	NA	NA	NA	NA	NA	NA	NA
5	Open one-man foxhole	65	Very good	Good	Good	NA	NA	3.5	4.5	2.0	NA	NA	NA	NA	190	3.5	240	8
6	Open one-man foxhole with offset.	20	Excellent	Very good	Excellent	9.0	14	10.0	16.0	NA	50	0.6	180	5.5	240	4.0	420	13
7	One-man foxhole with half cover	55	Very good	Fair (—)	Very good	2.5	3	4.5	5.5	NA	10	0.1	20	0.6	200	3.5	260	8
8	One-man foxhole with half cover and offset.	20	Excellent	Very good	Excellent	10.0	14	12.0	18.0	NA	60	0.7	200	6.0	250	4.0	440	14
9	Open two-man foxhole	65	Good	Good	Good	NA	NA	6.0	8.0	3.0	NA	NA	NA	NA	280	5.0	320	10
10	Deepened two-man foxhole	55	Very good	Good	Very good	NA	NA	8.0	10.0	5.0	NA	NA	NA	NA	300	5.5	375	12
11	Two-man foxhole with half cover.	60	Very good	Fair to good.	Very good	4.0	4	8.0	10.0	NA	15	0.2	32	1.0	280	5.0	350	11
12	Two-man foxhole with half cover and two offsets.	15	Excellent	Very good	Excellent	20.0	30	22.0	35.0	NA	120	1.5	400	12.0	380	6.0	700	22
13	Two-man foxhole with half cover and adjoining shelter.	30	Excellent	Good	Excellent	11.0	17	13.0	22.0	NA	100	1.2	560	18.0	460	7.0	880	28
14	Open fighting trench (25-ft long).	85	Good	Fair	Fair	NA	NA	28.0	32.0	21.0	NA	NA	NA	NA	490	8.0	710	22
15	Fighting trench with full cover (25-ft long).	70	Excellent	Fair	Very good	27.0	29	35.0	40.0	NA	240	4.0	360	11.0	730	12.0	1,060	33

Table 3-24. Characteristics of Crew-served Infantry Weapon Emplacements

1	1	2	3	4	5	6	7	8	9	10	11	12	13	14	15	16	17	18
	Type of emplacement or shelter	Protection afforded				Total construction time in man-hours for construction with D-handle shovels and ordinary carpentry tools					Weight and volume of materials							
											Revetment materials for cover support only				Complete revetment			
						Revetment materials for cover support only		Complete revetment			Corrugated metal construction		Sized lumber construction		Corrugated metal construction		Sized lumber constr	
		Fortification protection factor (NUCWPN)	Thermal effects (NUCWPN)	Tracked vehicles	Artillery fragments	Corrugated metal construction	Sized lumber construction	Corrugated metal construction	Sized lumber construction	No revetment materials used	Weight (lb)	Volume (cu ft)	Weight (lb)	Volume (cu ft)	Weight (lb)	Volume (cu ft)	Weight (lb)	Volume (cu ft)
2	Open horseshoe-type M60 machinegun emplacements.	70	Good	Fair	Fair to good.	NA	NA	5	7	2	NA	NA	NA	NA	280	5.0	450	14
3	Open 2 one-man foxhole-type light machinegun emplacement.	65	Very good	Good	Good	NA	NA	6	7	4	NA	NA	NA	NA	530	10.0	640	20
4	Horseshoe-type machinegun emplacement with full cover.	55	Very good	Fair	Very good	9	11	11	14	NA	190	4.0	250	7	720	13.0	890	27
5	2 one-man foxhole-type machinegun emplacement with half cover and adjoining shelter.	30	Excellent	Good	Excellent	15	22	19	28	NA	250	2.5	630	20	520	7.5	850	80
6	Pit-type emplacement for 3.5-in. rocket launcher.	80	Fair	Fair	Fair	NA	NA	5	6	3	NA	NA	NA	NA	101	1.0	160	5
7	81-mm mortar emplacement	85	Good	Virtually none.	Fair	NA	NA	12	NA	NA	NA	NA	NA	NA	210	3.0	NA	NA
8	4.2-in. mortar emplacement	85	Good	Virtually none.	Fair	NA	NA	29	NA	NA	NA	NA	NA	NA	370	6.0	NA	NA
9	Recoilless rifle position (mounted).	80	Fair	Virtually none.	Fair	NA	NA	NA	NA	30	NA	NA	NA	NA	NA	NA	NA	NA

Table 3-25. Wire Entanglement Material Requirements

1	1 Material	2 Approximate weight (kg)	3 Approximate length (m)	4 Number carried by one man	5 Approximate weight of man-load (kg)
2	Reel	47.5	366.0	½	24.0
3	Bobbin	3.5–4.0	27.5	4–6	14.5–24.5
4	Standard barbed-wire concertina	25.0	15.2	1	25.0
5	Expedient barbed-wire concertina	13.5	6.1	1	13.5
6	Screw pickets, long	4.0	1.6	4	16.3
7	medium	2.7	0.81	6	16.3
8	short	1.8	0.53	8	14.5
9	extra-long	7.25	2.4	3–4	21.8–29.0
10	U-shaped pickets, long	4.5	1.5	4	18.1
11	medium	2.7	0.81	6	16.3
12	short	1.8	0.61	8	14.5
13	extra-long	7.7–10.5	2.13	2	15.4–20.8
14	Wooden pickets, long	5.4–7.25	1.5	3	16.3–21.7
15	short	1.4–2.7	0.75	8	11.0–21.7

ments for a defensive position is one and one-fourth times the frontage; minimum protective wire is five times the frontage. The length of tactical wire entanglements for a deliberate defense is five times the frontage; protective wire is six times the frontage.

(*b*) Table 3–25 lists the requirements for wire entanglement materials and is based on data in FM 5–34.

(*c*) Table 3–26 lists the materials required for constructing 275 meters of expedient concertina wire entanglements.

3–13. Minefields

a. General. For detailed information on mine warfare, see FM 20–32 and FM 20–32A.

b. Standard Landmines. Table 3–27 provides data on standard landmines. (See also FM 5–34.)

c. Minefield Estimates. Table 3–28 may be used for initial estimates of materiel, transportation, and labor requirements to emplace various minefields. The table is based on a standard pattern (three strips for protective, eight for defensive, and nine for barrier minefields). No safety factor for loss or damage to mines and fuzes in transport is included in the data. Normally, there is a 10-percent allowance for such loss.

d. Minefield Clearance. Table 3–29 may be used for initial estimates of time and materiel requirements for clearing or breaching minefields.

Table 3-26. Material Requirements for Construction of 275 Meters of Expedient Concertina Wire Entanglements

1	1 Type of concertina	2 Standard barbed wire (400-yd reels)	3 Number 10 wire (100-lb coils)	4 Number 16 wire (10-lb coils)
2	Double-belt	23	1	1
3	Triple-belt	34	1	1

Table 3-27. Standard Landmines

1	1 LIN	2 Type	3 Unit weight (lb)	4 Number per container	5 Gross weight (lb)	6 Cubage (cu ft)
2	M45945	Apers, nm, M14	0.25	90	44	1.73
3	M46082	Apers, M16A1	8.0	4	45	0.77
4	M46493	Apers, M18A1	2.5	6	53	1.84
5	M47863	At, HE, hv, M15	31.0	1	49	1.17
6	M48000	At, HE, nm, hv, M19	28.0	2	71	1.57
7	M48137	At, HE, hv, M21	18.75	4	90	4.14
8	M48822	Cml, 1-gal, HD-filled*	11.0	10	115	2.0
9	M48959	Cml, 2-gal, ABC-M23, VX-filled	22.75	3	115	3.8

Table 3-28. Manpower, Materiel, and Transportation Requirements for Emplacement of Minefields

1	Item	Units per 1,000 meters of minefield			Nuisance mining	
		Protective [a]	Defensive 1-4-8 [b]	Barrier 3-4-8 [b]	Harassing per kilometer [b]	Route mining per kilometer
2	Antitank mines	500.0	1,632.0	4,564.0	4.0	30.0
3	Metallic (M15)	(125.0) [c]	(1,306.0) [c]	(3,651.0) [c]		
4	Nonmetallic (M91)		(326.0)	(913.0)	(1.0)	[d]
5	Mine, shaped-charge (M21)	(375.0)			(3.0)	(25.0)
	Antipersonnel mines:					
6	Blast (M14 or M25)	1,000.0	12,601.0	12,601.0	15.0	175.0
7	Fragmentation (M16A1)		6,194.0	6,194.0	25.0	325.0
8	Directional (M18A1)	1,000.0			5.0	20.0
9	Firing devices		[e] 164.0	[e] 1,460.0	[f] 2.0	[f] 10.0
10	Trip flares (M49)	100.0	100.0	100.0		
11	Barbed wire (400-yd reel) [g]		10.6	11.6		
12	Pickets, long		140.0	150.0		
	Manpower: [h]					
13	Man-hours	370.0	2,420.0	3,213.0	8.0	71.0
14	Platoon hours (30 men)	12.3	80.7	107.1	0.27	2.37
15	Company-days (3 plt, 10 hr per day)	0.4	2.7	3.6	0.009	0.08
	Tonnages:					
16	Short tons	10.83	74.27	142.37	0.42	2.296
17	Measurement tons	16.43	81.44	161.86	0.23	2.340
	Trucks required:					
18	2½-ton (M35)—4 tons or 407 cu ft	2.7	18.6	35.6	0.1	0.6
19	5-ton (M54)—6 tons or 513 cu ft	1.8	12.4	23.7	0.07	0.38
20	5-ton (M51)—7½ tons or 135 cu ft	4.9	24.2	48.0	0.07	0.7

[a] No irregular outer edge (IOE) in protective field.
[b] IOE cluster composition for defensive and barrier minefields is 1-2-2.
[c] Reduce number of mines in defensive and barrier minefields 50 percent when using M21 mines in place of M15 mines.
[d] 20 percent of M15 and M19 boobytrapped with 2 devices.
[e] 5 percent of M15 and M19 boobytrapped with 2 devices.
[f] 100 percent of M19 boobytrapped with 2 devices. M21 cannot be boobytrapped with devices.
[g] Sides and rear of minefield only.
[h] Based on laying rate of 4 antitank, 8 antipersonnel fragmentation, or 16 antipersonnel blast mines per man-hour.

Table 3-29. Minefield Clearance (Average Time and Materiel Requirements)

1	Method	Width of cleared lane (m (yd))	Man-hours required per 91.44 meters (100 yd)	Remarks
	Manual			
2	Location by probing	0.914 (1.0) (footpath).	15.0-20.0	See note.
3	Removal by rope or explosives	3.657 (4.0) (vehicle lane).	35.0-40.0	See note.
4	Location by detector, assisted by probing	22.86 (25.0) 3.657 (4.0) (vehicle lane).	200.0-225.0 25.0-30.0.	See note.
	Explosives			
5	Demolition snake, MM3A1	2.74-3.65 (3.0-4.0).	0.75	Employment time only. 90-100 hours required for assembly of M3A1.
6	Cable, antipersonnel, M1	0.914 (1.0) (footpath).	3.0-4.0	Cable, antipersonnel, M1 is not effective against antitank mines.
7	Bangalore torpedo	0.914 (1.0) (footpath).	3.0-4.0	See note.

Note. Based on average conditions of visibility and moderate enemy activity and normal US countermeasures, i.e., screening of enemy observation and counter-battery fires against hostile artillery or other weapons covering the field.

Table 3–30. Average Requirements for Artificial Obstacles (400 Square Kilometers)

1	Item and unit	2	3	4	5	6	7	8	9	10	11	12	13
		Defensive operations				Retrograde operations				Offensive operations			
		Easy movement	Moderate movement	Difficult movement	Very difficult movement	Easy movement	Moderate movement	Difficult movement	Very difficult movement	Easy movement	Moderate movement	Difficult movement	Very difficult movement
	Minefields												
2	Barrier (km)	10.3	7.8	2.6	2.6	1.0	0.8	0.5	0.3	0.3	0.2	0.1	0.1
3	Defensive (km)	5.2	4.0	2.5	1.3	0.4	0.3	0.1	0.1	0.2	0.1	0.1	0.1
4	Protective (km)	0.3	0.2	0.1	0.1	0.5	0.4	0.3	0.1	0.5	0.4	0.3	0.1
	Nuisance mining												
5	Harassing (sq km)	70.0	55.0	35.0	20.0	250.0	180.0	150.0	75.0				
6	Facility denial (each)	70.0	85.0	100.0	100.0	55.0	65.0	65.0	65.0	7.0	7.0	6.0	6.0
7	Route mining (km)	45.0	35.0	25.0	12.0	115.0	100.0	70.0	45.0				
	Obstacles												
8	Highway bridges (each)	40.0	35.0	30.0	15.0	35.0	30.0	20.0	15.0	4.0	4.0	3.0	2.0
9	Railroad bridges (each)	3.0	3.0	3.0	2.0	3.0	3.0	3.0	2.0				
10	Tunnels (each)				1.0				1.0				
11	Abatis (each)	7.0	15.0	25.0	30.0	6.0	8.0	12.0	14.0	1.0	1.0	1.0	1.0
12	Road craters (each)	75.0	68.0	68.0	66.0	28.0	28.0	30.0	36.0	1.0	1.0	1.0	2.0
	Barbed-wire entanglements												
13	Double apron 4/2 pace (km)	25.0	25.0	25.0	25.0	2.5	2.5	2.5	2.5				
14	4-strand protective (km)	10.0	10.0	10.0	10.0	1.0	1.0	1.0	1.0				
15	Triple concertina (km)	6.5	6.5	6.5	6.5	0.5	0.5	0.5	0.5				
	Materiel												
16	Antitank mines (each)	58,117.0	44,478.0	29,953.0	15,678.0	10,577.0	8,841.0	6,075.0	4,012.0	2,030.0	1,360.0	842.0	742.0
	Antipersonnel mines:												
17	Fragmentation (each)	118,132.0	93,914.0	63,469.0	34,996.0	59,647.0	51,013.0	36,567.0	25,253.0	4,017.0	2,679.0	1,900.0	1,700.0
18	Blast (each)	198,270.0	153,820.0	100,874.0	52,538.0	42,911.0	37,024.0	23,987.0	17,078.0	6,741.0	4,228.0	2,892.0	2,692.0
19	Firing devices, assorted (each)	16,761.0	12,844.0	8,722.0	4,569.0	3,396.0	2,837.0	2,007.0	1,315.0	499.0	337.0	187.0	187.0
20	Trip flares	3,655.0	3,275.0	2,855.0	2,475.0	400.0	358.0	300.0	258.0	100.0	70.0	30.0	30.0
21	Explosives (total) (lb)	99,000.0	93,800.0	93,800.0	88,600.0	65,300.0	60,300.0	54,500.0	52,600.0	5,100.0	5,100.0	4,100.0	3,100.0
22	Barbed wire (400-yd reels)	1,214.6	1,172.9	1,126.8	1,084.0	120.0	110.0	110.0	108.7	5.6	3.4	2.3	2.3
23	Concertina coils (each)	1,281.0	1,281.0	1,281.0	1,281.0	98.6	98.6	98.6	98.6				
24	Short tons	2,291.2	1,820.4	1,324.8	826.0	655.3	559.7	415.6	301.4	72.5	49.7	32.9	30.0
25	Measurement tons	2,473.7	1,948.0	1,383.2	827.8	610.1	519.3	372.3	265.5	79.6	53.6	3.7	30.8
	Manpower												
26	Platoon-hours (30 men)	1,981.0	1,600.0	1,174.0	753.5	596.6	512.6	382.6	281.9	63.0	43.0	29.8	27.2
27	Battalion-days (10-hr day, 4 co, 3 plt each)	16.5	13.3	9.8	6.3	5.0	4.3	3.6	2.3	0.5	0.4	0.3	0.2

See footnotes on next page.

Notes: *1*. Terrain types having following characteristics:

a. *Movement*.

(1) *Easy*. Rolling or level, mostly open, trafficable land. (No one obstacle or combination of obstacles comprises more than 25 percent of the area.)

(2) *Moderate*. Low hills, scattered forest, poorly drained land. (Any one type of obstacle or combination of obstacles comprises 25 to 50 percent of the area.)

(3) *Difficult*. High hills, broken forests, poorly drained land. (Any one type of obstacle or combination of obstacles comprises 50 to 75 percent of the area.)

(4) *Very difficult*. Mountains, forests, marshes. (Any one type of obstacle or combination of obstacles comprises 75 percent of the area.)

b. *Obstacles*.

(1) Hills and mountains—steep slopes and rough terrain.

(2) Forests—dense woods with trees that are large enough to stop tanks.

(3) Marsh—wet, swampy, untrafficable ground.

2. Does not include tactical wire.

Table 3-31. Materiel and Manpower Requirements for Individual Barrier Targets

1	1 Target	2 C-4 (lb)	3 TNT (lb)	4 Cratering charge (40-lb)	5 Shaped charge (40-lb)	6 Thermite grenades (each)	7 Squad-hours (10 men)
	Highways						
2	Major bridge (more than 400 ft)		1,200				3.0
3	Minor bridge (up to 400 ft)		800				2.0
4	Tunnel		12,000				5.0
5	Road crater		500	102			12.0
	Railroads						
	Major bridge (more than 400 ft):						
6	Single track		3,000				6.0
7	Double track		4,500				6.0
	Minor bridge (up to 400 ft):						
8	Single track		2,000				4.0
9	Double track		3,000				4.0
10	Tunnel		12,000				5.0
11	Terminal facilities	542	30			43	3.2
12	Rolling stock (locomotive and 30 cars)	6				121	3.2
	Airfields						
13	Runaway (per 1,000 ft)		5,500		25		8.0
	Fuel storage (per tk):						
14	Below ground		400			1	1.0
15	Above ground				1	1	0.2
16	Radar/radio apparatus		30			10	0.4
	POL facilities						
17	Storage and handling	4		15		10	1.2
18	Refining facilities	80				15	0.8
19	Distribution	10				2	0.2
	Electric power denial						
20	Generator		150			10	1.0
21	Transformer station		100			25	1.0
	Telecommunication denial						
22	Telegraph exchange	10				1	0.1
23	Telephone exchange	20				2	0.2
24	Repeater/radio station	40				2	0.2
25	Radio station	40					0.2
26	Radio link terminal	40					0.2
	Waterway denial						
27	Lock	110					0.6
28	Weir		1,000				2.0
29	Levee wall, aqueduct, or siphon			15			2.0
30	Dam (navigation)	500					2.5
31	Inland port facilities	20	20				0.4

e. Artificial Obstacle Requirements. Table 3-30 may be used for initial estimates of types of materiel and manpower requirements for artificial obstacles.

3-14. Demolitions

a. Explosive requirements for various demolition tasks vary widely, depending on the size of the structure, type of construction, type of mate-

Table 3-32. Fording Data

	1	2	3	4
1	Type of traffic	Fordable depth (m (ft))	Minimum width (m (ft))	Maximum desirable slope for approaches (percentage)
2	Ft	1.0 (3.3)	1.0 (3.3) (single file) 2.0 (6.6) (colm of 3's)	100
3	Trks and trkdr arty.	0.6 (2.0)	3.7 (12.0)	33
4	Lt tks	1.0 (3.3)	4.3 (14.0)	50
5	Mdm tks *	1.2 (4.0)	4.3 (14.0)	50

*Depths up to 4.3 meters (14.1 ft) can be negotiated with deep-water fording kit.

rials in the structure, age, location, necessary safety precautions, and other factors.

b. Table 3-31 may be used for initial estimates of materiel and manpower requirements for the more common types of demolition tasks required in creating obstacles. See FM 101-10-3 for classified data and FM 5-25 for unclassified details on demolitions.

3-15. Ford Trafficability

Data in table 3-32 are based on a moderate current (not more than 1.5 meters per second); hard bottom; and hard, dry approaches. Suitable waterproofing may materially increase fording depths of vehicles. For streams of high current velocity, the attitude of the tank (lines 4 and 5 in the table) to the current and the length of time the tank is exposed to the current have an appreciable effect on the depth that the tank can ford. Four feet is the design fording depth of modern US tanks. Experience indicates that tanks can ford slightly greater depths for short distances without stalling.

3-16. Load-Bearing Capacity of Ice

The strength of ice varies with the structure of the ice, the purity of the water from which it forms, the cycle of formation (freezing, thawing, and refreezing), temperature, snow cover, and water currents. Tables 3-33 and 3-34 are based on the characteristics of good-quality waterborne ice. They may be used as guides until actual load tests are made to determine the load-bearing capacity of the ice.

Table 3-33. Ice Load-Carrying Capacity for Sleds

	1	2
1	Ice thickness (cm (in))	Gross sled weight (tons)
2	15.0 (6.0)	1
3	17.5 (7.0)	2
4	23.0 (9.0)	5
5	33.0 (13.0)	10
6	40.0 (16.0)	15
7	46.0 (18.0)	20

Table 3-34. Ice Load-Carrying Capacity for Personnel and Equipment

	1	2	3	4
1	Type of load	Gross weight (tons)	Minimum ice thickness (cm (in))	Minimum distance between loads (m (yd))
2	Soldier on skis or snowshoes	0.1	3.0 (1.2)	5.0 (5.5)
3	Soldier on foot	0.1	5.0 (2.0)	5.0 (5.5)
4	Infantry (col of 2's)		7.6 (3.0)	7.3 (8.0)
5	Infantry (col of 4's)		10.0 (4.0)	10.0 (11.0)
6	Wheeled-vehicle loads up to	3.5	23.0 (9.0)	15.0 (16.5)
7	Wheeled-vehicle loads up to	6.0	30.0 (12.0)	20.0 (22.0)
8	Wheeled-vehicle loads up to	10.0	40.0 (16.0)	25.6 (28.0)
9	Wheeled-vehicle loads up to	15.0	61.0 (24.0)	30.0 (33.0)
10	Tracked-vehicle loads up to	3.5	20.0 (8.0)	15.0 (16.5)
11	Tracked-vehicle loads up to	10.0	30.0 (12.0)	20.0 (22.0)
12	Tracked-vehicle loads up to	12.5	40.0 (16.0)	25.6 (28.0)
13	Tracked-vehicle loads up to	25.0	61.0 (24.0)	40.0 (44.0)
14	Tracked-vehicle loads up to	45.0	71.0 (28.0)	50.0 (55.0)
15	Tracked-vehicle loads up to	60.0	81.0 (32.0)	60.0 (66.0)

CHAPTER 4

COMBAT SERVICE SUPPORT—PERSONNEL

Section I. INTRODUCTION

4–1. General

a. Combat Service Support. Combat service support is the assistance provided operating forces primarily in the fields of administrative services, chaplain service, finance, legal service, maintenance, medical support, military police support, supply, transportation, and other logistic services.

b. Coordination.

(1) Close coordination between combat and combat service support planning is essential because combat service support has a decisive influence on combat operations.

(2) Planning for combat and combat service support is concurrent. Combat service support planners must have information sufficiently in advance of a combat operation to arrange for combat service support. This information consists of strategic and tactical planning data needed for the preparation of practicable plans.

c. Units Providing Combat Service Support. Units providing combat service support at direct support and general support levels are discussed in this chapter and in other portions of the manual as follows:

(1) Personnel and financial administrative support—paragraphs 4–3, 4–4, and 4–5.

(2) Army medical units—paragraph 4–27.

(3) Ammunition service—paragraphs 5–10 and 5–11.

(4) Supply—paragraph 5–42.

(5) Transportation service—chapter 6.

(6) Engineer support—paragraphs 2–20 and 7–17.

(7) Maintenance service—paragraph 7–1.

4–2. Outline

The following is an outline of subject matter in this chapter that pertains to personnel administration:

a. Personnel and Financial Administrative Support. Paragraphs 4–3, 4–4, and 4–5 describe briefly the functional systems and organizations that provide general and direct personnel and financial administrative support in a theater of operations and furnish references for details on these services and organizations.

b. Personnel Losses and Replacements. Paragraphs 4–6 through 4–11 provide information to assist staff officers in estimating personnel losses and replacement requirements for—

(1) Combat zone forces of division or larger size organizations.

(2) Communications zone (COMMZ) forces.

(3) Total theater of operation forces (nonnuclear). FM 101–10–3 contains classified data on estimation of losses and requirements for replacements in a theater of operations when the enemy employs nuclear weapons.

c. Evacuation and Hospitalization of Patients. Paragraphs 4–12 through 4–27 provide information on admission, disposition, and evacuation of patients to and from medical facilities within a theater of operations.

d. Prisoners of War. Paragraphs 4–28 through 4–34 provide bases for estimates of prisoners of war and civilian and military internees through use of crime rates and experience data from World War II and the Korean War.

e. Personnel Services. Paragraphs 4–35 through 4–38 furnish—

(1) Bases for estimates of decorations through use of data tables derived from World War II and the Korean War and for estimates of mail through use of data tables derived from World War II, Korean War, and Vietnam experience.

(2) Chaplain planning factors.

(3) Legal service planning factors.

Section II. PERSONNEL AND FINANCIAL ADMINISTRATIVE SUPPORT

4-3. General

a. Personnel and finance combat service support systems and organizations in a theater of operations use automatic data processing equipment to provide responsive support to user requirements and management needs. Commanders and their staffs execute personnel management and financial maters by exception through extensive use of summary automatic data processing equipment reports and other printouts. Centralized and controlled personnel recordkeeping minimizes recordkeeping at unit level. Personnel and finance general support and direct support units provide support to both COMMZ and combat zone commands. Details on adjutant general (AG) and comptroller and financial management areas are in FM 12-2, FM 14-3, and FM 29-6.

b. The AG functional systems operated by personnel and administrative general support and direct support organizations in a theater of operations include personnel recordkeeping, personnel management and actions, assignment of replacements, casualty reporting, administrative services, postal services, and special services.

c. The finance functional systems in a theater of operations operated by finance direct support and general support personnel pertain to finance and accounting and include—

(1) Administering pay (military personnel, civilian personnel, civilian internees, local nationals, and prisoners of war).

(2) Processing and paying travel allowances.

(3) Administering commercial accounts.

(4) Operating forward service finance teams and currency exchange facilities.

(5) Furnishing financial support to dependents under specific conditions.

(6) Administering appropriations and funds.

(7) Preparing data required for Army management and budget administration.

4-4. Personnel and Administrative Support Organizations

a. Personnel Command (TOE 29-111). The personnel command (PERSCOM) of a theater army support command (TASCOM) provides general personnel and administrative support to direct support activities in the COMMZ and the combat zone. These activities include personnel, administrative, prisoner of war/civilian internee, graves registration (GRREG), confinement and rehabilitation, crime laboratory, and chaplain services. As a composite activity of related personnel and administrative functions, the personnel and administration center of the PERSCOM is organized and equipped to operate as the focal point of all aspects of the personnel and administrative system, which extends vertically from company level in the field army through the theater army. In this role, the personnel and administration center provides prompt and accurate response to requirements for personnel; discipline, law and order; and GRREG data from the Department of the Army (DA), theater army staff elements, and subordinate commands and is the administrative link, or interface, between these commands. The PERSCOM provides general support personnel and administrative services to theater army through the following organizations:

(1) Personnel and administration center (TOE 29-112), which functions as a carrier unit for the operating personnel of the center.

(2) Automatic data processing unit (TOE 29-540), which provides essential computer services to the personnel and administration center.

(3) Replacement regulating organization (TOE 12-560), which provides replacement regulating elements at points of entry to or exit from the theater army in support of direct support replacement regulating detachments throughout the theater of operations and direct support replacement regulating services to COMMZ organizations.

(4) Postal service organization (TOE 12-550), which provides mail processing at mail terminals located at points of entry to or exit from the theater and the in-transit regulating terminals that distribute bulk mail to or from Army post offices in specific geographical areas; postal finance and supply services at the theater army postal finance and supply depot; and theater postal locator services.

(5) Special services organization (TOE 12-18), which employs recreation and entertainment teams to establish and operate rest areas and leave and recreation centers in the theater of operations and to stimulate, develop, and maintain the mental and physical well-being of military personnel through their participation in planned recreational and morale activities.

(6) GRREG organizations, which conduct op-

erations for search and recovery of remains; operate central collecting points for remains, personal effects depots, and military cemeteries; provide personnel to support oversea mortuary operations, when required; and coordinate the evacuation of remains from the field army area and the COMMZ to the continental United States (CONUS) when a concurrent return-of-remains policy is in effect. The GRREG organizations include a GRREG group (TOE 10-292), GRREG battalions (TOE 10-296), and GRREG companies (TOE 10-297). The type and number of GRREG organizations employed depend on the situation existing in a specific theater of operations.

(7) Chaplain general support detachment (TOE 16-4), which operates theater-wide chaplain general support activities, plans for and supervises religious retreat centers; provides instructions and materials for lay leaders and information for radio and television networks; and operates a professional and educational religious library and briefing service for all chaplains.

(8) Military police organizations, whic provide services for the evacuation, processing, administration, and internment of prisoners of war and civilian internees; the confinement and rehabilitation of US military prisoners; and crime laboratory services. Military police organizations include a military police prisoner of war brigade (TOE 19-282), a military police battalion, stockade, or rehabilitation training center (TOE 19-316); and a crime laboratory team (TOE 19-500).

b. Personnel and Administration Battalion (TOE 12-66).

(1) *Army or corps support brigade.* The personnel and administration battalion, army or corps support brigade, provides direct support personnel and administrative services to personnel of nondivisional units (other than separate brigades) of the field army or corps support brigade and to independent corps. The battalion headquarters forms the nucleus of a personnel service center, a functional control center that is coordinated with the personnel and administration center, PERSCOM. Direct support personnel and administrative service organizations assigned to the personnel and administrative battalion, army or corps support brigade, include—

(*a*) Personnel service company (TOE 12-67), which acts as custodian of military personnel records and provides centralized personnel management and actions in direct support of nondivisional elements of the army or corps support brigade and the field army.

(*b*) Replacement regulating detachment (TOE 12-560), which provides direct support to nondivisional elements of the army or corps support brigade and to the field army in the command, control, and limited administration of individual and unit replacements and rotatees within its assigned area of responsibility in the combat zone.

(*c*) Administrative service detachment (TOE 12-570), which provides centralized administrative service support (volume reproduction) and unclassified records library services for all nondivisional units (other than separate brigades) located in its assigned area of responsibility.

(*d*) Army post office (TOE 12-550), which provides direct postal support, to include mail distribution, dispatch, and postal finance services, to individuals and to nondivisional units (other than separate brigades) in its assigned area of responsibility.

(*e*) Special services detachment (TOE 12-18), which establishes and controls leave and recreation centers and rest areas within specific areas of assignment.

(*f*) Band (TOE 12-207), which provides appropriate music for military ceremonies and recreational activities.

(2) *Area support command.* The personnel and administration battalion, area support command (ASCOM), provides direct personnel and administrative support on an area basis to all theater army and TASCOM nondivisional troops located in the COMMZ. This battalion consists of a headquarters and headquarters detachment, a variable number of personnel service companies, and an administrative service detachment. These organizations provide essentially the same services in their areas of responsibility as those described in (1) above. A personnel services directorate at group level in the ASCOM coordinates chaplain, postal, bank, law and order, special services, and miscellaneous personnel services.

c. AG Company, Armored, Infantry, and Infantry (Mechanized) Division Support Commands/ AG Section, Administration Company, Airborne and Airmobile Division Support Commands, and Separate Brigades. These units provide direct support personnel and administrative services to personnel and units of divisions and separate brigades, to include personnel recordkeeping actions

and management, replacement regulation, administration, special services, and postal services.

4-5. Finance and Accounting Organizations

a. Finance General Support Group (TOE 14-4). This unit performs the combined duties of an operating agency and an installation accounting element for the theater army. The finance general support group records all transactions accomplished in theater army to facilitate the preparation of theater army financial data reports required for Army management and budget administration.

b. Finance Service Organization (TOE 14-500). These cellular teams perform either finance direct support or general support when the capabilities of the finance general support group or the finance direct support company are not sufficient for theater army needs or when lines of communications are not adequate.

c. Finance Direct Support Company, Armored Infantry, and Infantry (Mechanized) Division Support Commands/Finance Section, Administration Company, Airborne and Airmobile Division Support Commands, and Separate Brigades. These units provide military pay and financial administrative direct support to organic units of divisions and separate brigades.

Section III. LOSSES AND REPLACEMENTS

4-6. Loss

A personnel loss is any reduction in the assigned strength of a unit. A loss is caused primarily by enemy action, disease, accidents, and administrative action. The rate of loss varies with the theater of operations, climate, terrain, the condition and state of training of troops, type of activity, the enemy, and numerous other factors. Each division and corps has its own loss experience dependent on its own situation. Loss rates by armor service and by military occupational specialty (MOS) within corps and division vary with the exposure of the particular category of personnel to the various causes of losses.

a. Categories of Losses. Personnel losses are recorded in three general categories:

(1) *Battle,* which are those losses incurred in action, including—

(*a*) Wounded or injured in action, to include those who died of wounds and died of injuries received in action.

(*b*) Killed in action.

(*c*) Missing in action or captured by the enemy.

(2) *Nonbattle,* which are those losses not directly attributable to being in action, regardless of when sustained, including—

(*a*) Nonbattle dead.

(*b*) Nonbattle accident/injury.

(*c*) Nonbattle missing.

(*d*) Sick/disease.

(3) *Administrative,* which are those losses including—

(*a*) Transfers from the unit.

(*b*) Absent without leave.

(*c*) Desertion.

(*d*) Rotation of personnel.

(*e*) Discharges.

b. Gross Losses. Besides those killed, captured, or missing, gross losses include personnel evacuated to hospitals and dropped from the rolls of their units. In all units in the theater army, any man hospitalized or evacuated to a hospital is dropped from unit rolls and carried on the rolls of theater training, transient, and patient strength, which is not chargeable against the authorized theater strength.

c. Net Losses. Net losses are gross losses less personnel returned to duty within the theater. Net losses are computed only at theater level and are used as a basis for estimates of personnel required from the CONUS to maintain theater strength.

d. Loss Experience.

(1) Factors and figures that appear in the tables of this section are based primarily on World War II and Korean War experience and will not necessarily apply during another war. For planning, loss experience of past wars is modified by evaluating new factors applicable to new conditions. As a war progresses, every echelon of command gradually builds up loss experience that more accurately reflects the current conditions. Even the most complete and accurate figures relating to past wars cannot be relied on as valid for any future war. With experience as a basis, good judgment and sound knowledge of principles are used to develop new experience tables applicable to new conditions. Administrative losses are

based on changing policies and, except for the confinement rates for military prisoners, are not adaptable to the establishment of loss tables based on experience. Therefore, experience tables for administrative losses, other than confinement, are not included in this manual. Paragraphs 4–28 through 4–34 contain experience tables for losses to confinement.

(2) Since the disease rate is a large part of the nonbattle loss rate, the overall loss rate has seasonal variations and depends on the region where the force is operating. Generally, disease losses can be expected to exceed battle losses over an extended period by as much as 3 to 1. On occasions, the ratio may reach 6 to 1 or greater. The majority of disease cases are not hospital admissions and, therefore, do not contribute to statistics. For example, approximately 10 persons per 1,000 will attend dental clinics daily; they will be noneffective for a portion of that day, but they will not be reflected in daily admission rates. However, these disease losses do represent a form of noneffectiveness since they can markedly decrease the ability of an individual or a unit to perform a mission.

4–7. Nuclear Loss Estimates

a. General. The enemy's use of nuclear weapons against US forces results in increased battle losses. Battle losses from nuclear weapons may be divided into the following two general categories:

(1) Battle losses sustained when a military unit is destroyed. Such losses are so great that individual replacement is not feasible. Replacements for these battle losses are provided for by unit replacement.

(2) Battle losses sustained when units are on the periphery of the area of damage. Replacements for battle losses in this category come from survivors of destroyed units and from personnel in the individual replacement system.

b. Factors Influencing Losses. No valid experience data exist from which loss experience tables can be compiled. The problem of estimating the number of replacements (both unit and individual) required to replace losses to nuclear weapons involves many variable factors. Among the more important of these factors are—

(1) Frequency of enemy employment of nuclear weapons.

(2) Types and yields of weapons employed.

(3) Types of targets selected for nuclear weapon attack.

(4) Effectiveness of enemy target location system.

(5) Accuracy of enemy delivery means.

(6) Protective measures adopted by own forces.

c. Effect of Nuclear Attack. Nuclear attack on the CONUS with the attendant damage, contaminations, and fallout introduces new elements that will affect the magnitude of disease and nonbattle injury rates among survivors. A preliminary gross estimate that may be used in planning for nuclear warfare indicates that a multiplying factor of 2.8 is applied to the nonbattle admission rate as shown for the CONUS.

d. Estimation of Battle Losses. Effective battle loss estimation requires an aggressive effort on the part of all agencies, particularly intelligence agencies, to provide specific data to eliminate the variable factors outlined in *b* above or to permit reasonable assumptions concerning these variable factors. The validity of battle loss estimation is directly proportional to the degree of refinement that can be made in these factors. FM 101–10–3 contains classified information pertaining to nuclear battle losses under conditions of nuclear warfare.

4–8. Unit Replacements

Each theater army is authorized separate units to employ as replacements for units that may become ineffective. DA determines the numbers and types of units furnished, based on the recommendations of the theater commander.

4–9. Combat Zone Estimates

a. General. The procedures and data in this paragraph apply to the estimation of nonnuclear losses. Because of the possible nuclear battle losses and the effect that such losses may have on tactical operations, nuclear battle losses are estimated separately. (See FM 101–10–3.)

b. Purpose of Estimate. Personnel loss estimates at corps and division are used to anticipate the effect of losses on the tactical plan for the handling of replacements in the commands. The estimates have to indicate the strength at any given time, the losses anticipated for a specific situation, and the distribution of these losses by arm or service and MOS. Combat estimates are of two types—short-period (5 days or less) and long-period (more than 5 days). Estimates at field army are used for the same purposes as at corps

Table 4–1. Daily Personnel Losses a Percentage of Strength

1	General type of operation for the force as a whole	Division in contact			Divisions in corps and field army reserve			Nondivisional units, corps and field army [1]		
		Battle loss (percentage)	Nonbattle loss (percentage)	Total (percentage)	Battle loss (percentage)	Nonbattle loss (percentage)	Total (percentage)	Battle loss (percentage)	Nonbattle loss (percentage)	Total (percentage)
2	Covering and security force action	0.9	0.3	1.2	0.3	0.3	0.6	0.3	0.1	0.4
	Attack:									
3	Meeting engagement	2.4	0.3	2.7	0.3	0.3	0.6	0.4	0.1	0.5
4	Of a position—1st day	3.8	0.3	4.1	0.4	0.3	0.7	0.5	0.1	0.6
5	Succeeding days	1.9	0.3	2.2	0.3	0.3	0.6	0.4	0.1	0.5
6	Of a fortified zone—1st day	6.3	0.3	6.6	0.5	0.3	0.8	0.7	0.1	0.8
7	Succeeding days	3.2	0.3	3.5	0.4	0.3	0.7	0.5	0.1	0.6
	Defense:									
8	Meeting engagement	1.5	0.3	1.8	0.3	0.3	0.6	0.3	0.1	0.4
9	Of a position—1st day	1.9	0.3	2.2	0.3	0.3	0.6	0.4	0.1	0.5
10	Succeeding days	1.0	0.3	1.3	0.3	0.3	0.6	0.3	0.1	0.4
11	Of a sector—1st day	3.2	0.3	3.5	0.4	0.3	0.7	0.5	0.1	0.6
12	Succeeding days	1.6	0.3	1.9	0.3	0.3	0.6	0.4	0.1	0.5
13	Inactive situations [2]	0.7	0.3	1.0	0.3	0.3	0.6	0.3	0.1	0.4
14	Pursuit	1.3	0.3	1.6	0.3	0.3	0.6	0.3	0.1	0.4
15	Retirement and delaying action	0.7	0.3	1.0	0.3	0.3	0.6	0.3	0.1	0.4

[1] Use divisional loss rates for units attached to a division.
[2] Forces in contact—neither side attacking.

and division. Additionally, estimates are used as a basis for allocation of available replacements and to inform higher headquarttrs of anticipated replacement requirements. Field army and corps headquarters use both short-period and long-period estimates. Divisions normally use only short-period estimates.

c. Factors. In calculation losses, two major factors are considered:

(1) Loss rates applicable to the specific situation are expressed as percentage of strength or as number per thousand of average strength of any given period. In compilation and use of loss data, units whose loss rates are about the same because of similar operating conditions are grouped together.

(2) Loss rates are applied to the strength of the particular command under consideration. Two different strengths are used:

(*a*) *Authorized strength* is table of organization and equipment (TOE) strength plus additional personnel authorized by higher headquarters. Authorized strength is used in long-range planning and in cases of unknown or rapidly fluctuating assigned strength.

(*b*) *Assigned strength* includes all personnel carried as assigned on the unit's roster. Assigned strength is used, when known, in long-period estimates if it differs materially from authorized strength and if it will remain reasonably stable during the estimated period.

Table 4–2. Distribution of Battle Losses by Branch (Divisions)

1	Branch	Infantry division (percentage)	Armored division (percentage)	Airborne division (percentage)
2	Infantry	93.0	62.0	85.6
3	Artillery	2.4	3.6	6.9
4	Armor	2.0	23.1	0.0
5	Engineers	1.5	3.3	3.9
6	All others	1.1	8.0	3.6

d. Short-Period Estimates (Periods Not in Excess of 5 Days).

(1) *General.* Tables 4–1 and 4–2 provide percentages by type of action and by combat arm or branch. Table 4–1 is not used for loss estimates for a period greater than 5 days.

(2) *Distribution of infantry battle losses by selected MOS within an infantry division.* Personnel losses of maneuver battalions most seriously affect the combat effectiveness of an infantry division. A total of 87.4 percent of the infantry battle losses occurs among riflemen and weapon crewman (and closely allied specialists), who constitute the larger portion of the infantry division assault battalions' strength. In stability opera-

tions, maneuver battalions may experience a substantial increase in the loss rate among noncommissioned officers.

(3) *Distribution of nonbattle losses.* Nonbattle losses in each branch are in the same proportion to the total nonbattle losses as the strength of that branch is to the total strength of the unit.

(4) *Example.* Calculate the total nonnuclear losses of a type of infantry division in the first 3 days of the defense of a position and determine the number of infantry riflemen and weapon crewmen who become battle losses.

(*a*) *Total losses.*

Authorized strength of division	17,423
Assigned strength of division (assumed), beginning o first day	15,341
Losses, first day, defense of position (2.2 percent × 15,341 (table 4–1, line 9, colm 4))	338
Assigned strength, end of first day	15,003
Losses, second day, defense of position (1.3 percent × 15,003 (table 4–1, line 10, colm 4))	195
Assigned strength, end of second day	14,808
Losses, third day, defense of position (1.3 percent × 14,808 (table 4–1, line 10, colm 4))	193
Assigned strength, end of third day	14,615
Total losses, 3 days (338+195+193)	726

(*b*) *Battle losses.*

First day, defense of position (1.9 percent × 15,341 (table 4–1, line 9, colm 2))	291
Second day, defense of position (1.0 percent × 15,003 (table 4–1, line 10, colm 2))	150
Third day, defense of position (1.0 percent × 14,808 (table 4–1, line 10, colm 2))	148
Total battle losses	589

(*c*) *Infantry battle losses.*

Infantry battle losses (93.0 percent × 589 (table 4–2, line 2, colm 2))	548
Infantry riflemen and weapon crewmen battle losses (87.4 percent (*d*(2) above) × 548)	479

e. Long-Period Estimates—Combat Zone (Periods in Excess of 5 Days).

(1) *Monthly personnel losses.* Tables 4–3 and 4–4 provide percentages of personnel losses for World War II and the Korean War respectively.

(2) *Types of battle losses as percentage of total battle losses.* Table 4–5 contains percentages for types of battle losses. Table 4–6 contains percentages for losses by branch within corps and

Table 4–3. Personnel Losses (World War II) (All Theaters)

	1	2	3
1	Troops	Battle losses (percentage per month)	Nonbattle losses (percentage per month)
2	Infantry divisions in combat zone.	10.00	8
3	Armored divisions in combat zone.	8.00	7
4	Corps and field army nondivisional troops in combat zone.	1.25	3

Table 4–4. Personnel Losses (Korean War) [1]

	Infantry Divisions					
	1	2	3	4	5	6
1	Type of operation	Battle losses per division per day [2]	Battle losses per division—percentage per month [2]	Status distribution (percentage)		
				Killed	Wounded	Missing
	Offensive:					
2	Against main enemy force	67	11.2	14.6	83.2	2.3
	Against delaying force:					
3	Organized	26	4.3	18.2	69.2	12.2
4	Partly disorganized	12	2.0	18.8	75.9	5.3
5	Against fortified hill positions	34	5.7	17.5	79.4	3.1
	Defensive:					
6	Against main enemy force	77	12.8	25.2	68.8	6.2
7	Main pressure on non-US units	35	5.8	16.1	70.6	13.2
8	Withdrawal	119	19.8	15.2	44.5	40.2
9	Positional warfare	6	1.0	18.6	75.0	6.4

[1] Based on experience 25 June 1950 to 25 July 1953.
[2] Based on assumed average divisional strength of 18,000.

Table 4-5. Types of Battle Losses as Percentage of Total Battle Losses

1	1 Battle losses	2 Infantry divisions (percentage)	3 Armored divisions (percentage)	4 Corps and field army nondivisional units (percentage)
2	Killed	16.5	18.0	16.0
3	Wounded	70.0	72.0	84.0
4	Captured and missing	13.5	10.0	(*)

*Negligible.

Table 4-6. Distribution of Battle Losses by Branch Within Corps and Larger Units in the Combat Zone as Percentage of Total Battle Losses

1	1 Branch	2 Percentage: World War II	3 Percentage: Korean War
2	Infantry	81.9	81.1
3	Artillery	4.5	
	Field	(3.6)	5.7
	Air defense	(0.9)	
4	Armor	6.6	5.3
5	Corps of Engineers	3.2	
6	Army Medical Service	2.8	
7	Signal Corps	0.2	
8	Quartermaster Corps	0.1	
9	Ordance Corps	0.2	7.9
10	Transportation Corps		
11	Chemical Corps	0.3	
12	Military Police Corps	0.1	
13	Miscellaneous	0.1	

Note. The percentage figures given in the World War II portion of thia tahle are the field hattle loss distribution as reported through data processing unit channels, European Theater of Operations, for the period 6 June 1944 through 31 March 1945. The figure for armor comhines the percentsge originally reported as armored forces (2.9 percent), tank destroyer (1.4 percent), and cavalry (2.3 percent). In actual operations, the distribution of hsttle losses hy hranch varies with the composition of the force, type of operation, etc.

larger units. For distribution of losses by branch within divisions, table 4-2 applies. For distribution of nonbattle losses, *d*(3) above applies.

(3) *Example.* Calculate the number of replacements required to bring 1st Corps to authorized strength and to maintain it at that strength in combat for 15 days, assuming no nuclear losses. Given—

Unit	*Authorized strength*	*Assigned strength*
Three infantry divisions	52,419	44,780
One armored division	18,057	15,604
Corps nondivisional troops	46,101	38,322
Total corps	116,577	98,706

(*a*) *Replacements needed now.*

Authorized (116,577)—assigned (98,706)	17,871

(*b*) *Estimated losses, 15 days.*

Infantry divisions (table 4-3, line 2):	
Battle losses (½ × 10.0 percent × 52,419)	2,621
Nonbattle losses (½ × 8.0 percent × 52,419)	2,097
Armored division (table 4-3, line 3):	
Battle losses (½ × 8.0 percent × 18,057)	722
Nonbattle losses (½ × 7.0 percent × 18,057)	632
Corps nondivisional troops (table 4-3, line 4):	
Battle losses (½ × 1.25 percent × 46,101)	290
Nonbattle losses (½ × 3.0 percent × 46,101)	692
Total losses for 15 days	7,054

(*c*) *Total replacements required.*

Replacements needed now	17,871
Losses for 15-day period	7,054
Total	24,925

f. Special Estimates for Airborne Operations.

(1) Personnel losses for forces conducting an airborne assault operation may be established by applying the applicable daily loss rates from table 4-7 to the assigned strength of units actually committed to the operation.

Note. Rates in this table are for planning purposes only. The rates for each airborne operation differ. The rates in this table are useful as a guide only or for use in practicing estimate procedures.

(2) *Example.* Calculate the number of nonnuclear losses that will be sustained by the 102d Airborne Division on D-day and D+1. Takeoff times and H-hour are on D-day. Computations for followup echelon are omitted from this example. Strength of the division (13,484) is echeloned as follows:

Unit	Strength
Assault echelon	11,571
Followup echelon	868
Rear echelon	1,045
Airhead—first day (table 4-7, line 2, colm 4):	
Assault echelon (11,571 × 9.6 percent)	1,111
Airhead—second day (table 4-7, line 2, colm 7):	
Assault echelon (11,571—1,111 × 2.3 percent)	241
Total losses D-day and D+1	1,352

g. Special Estimates for Amphibious Operations.

(1) Nonnuclear personnel losses for amphibious forces establishing a beachhead may be estimated by applying the applicable daily loss rates from table 4-8 to the assigned strength of units actually committed in the beachhead or en route thereto.

Table 4–7. Special Estimates for Airborne Operations

1	1 Type of operation and type of forces committed	2 First day (includes en route and in airbead) (percentage) Nonbattle loss	3 Battle loss	4 Total	5 Succeeding days (percentage)[1] Nonbattle loss	6 Battle loss	7 Total
	Airborne assault operation:						
	Airborne or infantry division and attached troops:						
2	Assault echelon (parachute and/or assault aircraft)[2]	0.3	9.3	9.6	0.3	2	2.3
3	Follow echelon	0.3	2.5	2.8	0.3	2	2.3
4	Corps troops	0.3	1.5	1.8	0.3	1	1.3
	Air-landed operation (inside secured airhead):						
5	Airborne or infantry division and attached troops (to include replacements committed to combat upon arrival)[3].	0.3	4.3	4.6	0.3	2	2.3
6	Corps troops	0.3	1.5	1.8	0.3	1	1.3

[1] Upon linkup or when forces in the objectives area are firmly established, rates and methods given in d or e above for an infantry division are applicable.
[2] For planning purposes and in the absence of experience factors, casualty figures for air-landed assault forces are assumed to be the same as for parchute assault forces.
[3] If not committed to combat, assess losses as for corps troops.

Table 4–8. Special Estimates for Amphibious Operations

1	1 Force	2 Phase I—Forces en route: Daily at sea[1] Nonbattle and battle loss (percentage)	3 Landing Battle loss (percentage)	4 Phase II—Forces in beachhead: First day Nonbattle loss (percentage)	5 Battle loss (percentage)	6 Total (percentage)[2]	7 Succeeding days[2] Nonbattle loss (percentage)	8 Battle loss (percentage)	9 Total (percentage)
	Assault forces:[4]								
2	Divisions and attached troops	0.5	1.3	0.3	5.3	5.6	0.3	1.5	1.8
3	Corps and field army troops	0.5	1.0	0.3	3.0	3.3	0.3	1.0	1.3
	Followup forces:[5]								
4	Divisions and attached troops	0.5	0.5				0.3	1.5	1.8
5	Corps and field army troops	0.5	0.5				0.3	1.0	1.3

[1] Rates in tbis column include both battle and nonbattle losses en route and are distributed by arm or service in the same proportion to tbe total losses as the strength of eacb arm or service is to the strength of the total force bcing transported.
[2] After beachbead is secure and forces are building up for the breakout (phase III), the rates and methods given in table 4–1 or tables 4–3 and 4–4 apply. The rates in tbis table apply only until the beachhead is firmly established.
[3] Losses are distributed as given in d(3) above for nonbattle losses; table 4–2 or table 4–6 above for battle losses by arm or service; table 4–5 above for battle losses by category (killed, wounded, captured, and missing).
[4] Assault forces in this table are those units who make their landing in the face of enemy opposition at or near the beachhead. For purposes of computing total division rates, tbe assumption is that an assault division lands 1 brigade by helicopter behind the beaches and 1 brigade over the beaches, followed by the reserve brigade and tbe remainder of the division.
[5] Followup forces in this table include tbose landing over beaches secured by otber friendly forces.

Note. Rates in this table are for planning purposes only. The rates for each amphibious operation differ. The rates in this table are for use as a guide only or for use in practicing estimate procedures.

(2) The amount and the type of reinforcement required by divisions making amphibious landings differ for each operation because the force must organize to fit the mission, the area of operations, the lift available. and the enemy situation.

(3) *Example.* Calculate the total of nonnuclear losses that will be sustained during an amphibious operation by 1st Corps on D—1, D-day, and D+1. Computations are tabulated in table 4–9.

Unit	Assigned strength
1st Infantry Division	15,606
2d Infantry Division	15,606
3d Infantry Division	15,606
Nondivisional troops, assault echelon	22,632
Nondivisional troops, followup echelon	36,415
Total 1st Corps	105,865

Total 1st Corps will sail at assigned strength. On D-day the 1st and 2d Infantry Divisions will assault the beach in a helicopter and waterborne assault. The 3d Infantry Division and nondivisional troops in the followup echelon will land on D+1.

(*a*) D—1 (losses at sea):

1. Assault divisions.

31,212 × 0.5 percent (table 4–8, line 2, colm 2) ---- 156

2. Nondivisional assault troops.

22,632 × 0.5 percent (table 4–8, line 3, colm 2) ---- 113

3. Followup division.

15,606 × 0.5 percent (table 4–8, line 4, colm 2) ---- 78

4. Nondivisional followup troops.

36,415 × 0.5 percent (table 4–8, line 5, colm 2) ---- 182

5. Total 1st Corps D—1 losses.

1+2+3+4 ---- 529

(*b*) D-day:

1. Assault landings.

(a) *Assault divisions.*

(31,212—156) × 1.3 percent (table 4–8, line 2, colm 3) ---- 404

(b) *Nondivisional assault troops.*

(22,632—113) × 1.0 percent (table 4–8, line 3, colm 3) ---- 225

2. Nonbattle losses.

(a) *Assault divisions.*

(31,212—156—404) × 0.3 percent (table 4–8, line 2, colm 4) ---- 92

(b) *Nondivisional assault troops.*

(22,632—113—225) × 0.3 percent (table 4–8, line 3, colm 4) ---- 67

3. Battle losses (forces in beachhead).

(a) *Assault divisions.*

(31,212—156—404) × 5.3 percent (table 4–8, line 2, colm 5) ---- 1,624

(b) *Nondivisional assault troops.*

(22,632—113—225) × 3.0 percent (table 4–8, line 3, colm 5) ---- 669

4. Losses at sea.

(a) *Followup division.*

(15,606—78) × 0.5 percent (table 4–8, line 4, colm 2) ---- 78

(b) *Nondivisional followup troops.*

(36,415—182) × 0.5 percent (table 4–8, line 5, colm 2) ---- 181

5. Total 1st Corps D-day losses.

1+2+3+4 ---- 3,340

(*c*) D+1:

1. Landing losses.

(a) *Followup division.*

(15,606—78—78) × 0.5 percent (table 4–8, line 4, colm 3) ---- 77

(b) *Nondivisional followup troops.*

(36,415—182—181) × 0.5 percent (table 4–8, line 5, colm 3) ---- 180

2. Beachhead losses.

(a) *Assault divisions.*

(31,212—156—404—92—1,624) × 1.8 percent (table 4–8, line 2, colm 9) ---- 521

(b) *Nondivisional assault troops.*

(22,632—113—225—67—669) × 1.3 percent (table 4–8, line 3, colm 9) ---- 280

(c) *Followup division.*

(15,606—78—78—77) × 1.8 percent (table 4–8, line 4, colm 9) ---- 277

(d) *Nondivisional followup troops.*

(36,415—182—180) × 1.3 percent (table 4–8, line 5, colm 9) ---- 469

3. Total 1st Corps D+1 losses.

1+2 ---- 1,804

4–10. COMMZ Estimates

a. In estimating the nonnuclear gross losses for all ground troops in the COMMZ, battle losses are considered negligible, and nonbattle losses are calculated at 0.5 percent per month. Arm or service distribution is determined by applying this nonbattle loss percentage to the strength of each arm or service in the command considered. When air superiority is lacking, the theater army planner must develop battle loss rates. Experience data for such rates do not exist.

b. Before a planner can estimate losses to nuclear weapons, he needs certain information on enemy capabilities (para 4–7). If he cannot obtain specific information, he makes assumptions. By

Table 4–9. Worksheet Form—Personnel Loss Estimates—Amphibious Operations

1	1	2	3	4	5	6	7	8	9	10
	Forces	D − 1			D-day			D + 1		
		Rate (percentage)	Strength	Losses	Rate (percentage)	Strength	Losses	Rate (percentage)	Strength	Losses
	Phase I—force at sea:									
2	Assault divisions	0.5	31,212	156						
3	Nondivisional assault troops	0.5	22,632	113						
4	Followup division	0.5	15,606	78	0.5	15,528	78			
5	Nondivisional followup troops	0.5	36,415	182	0.5	36,233	181			
	Landing:									
6	Assault divisions				1.3	31,056	404			
7	Nondivisional assault troops				1.0	22,519	225			
8	Followup division							0.5	15,450	77
9	Nondivisional followup troops							0.5	36,032	180
10	Total—phase I			529			888			257
	Phase II—forces in beachhead:									
	Assault divisions:									
11	Nonbattle losses				0.3	30,652	92	1.8	28,936	521
12	Battle losses				5.3	30,652	1,624			
	Nondivisional assault troops:									
13	Nonbattle losses				0.3	22,294	67	1.3	21,558	280
14	Battle losses				3.0	22,294	669			
15	Followup division							1.8	15,373	277
16	Nondivisional followup troops							1.3	35,872	489
17	Total–phase II						3,340			1,804

Table 4–10. Theater Losses

1	1	2	3	4	5	6	7	8	9
	Type of loss	Gross loss	Net losses (by evacuation policy)						
			15 days	30 days	60 days	90 days	120 days	150 days	180 days
2	Sick/disease and nonbattle accident injuries	1.62	0.61	0.28	0.15	0.11	0.08	0.05	0.05
3	Battle casualties	0.78	0.69	0.60	0.47	0.41	0.37	0.35	0.33
4	Killed	(0.14)	(0.14)	(0.14)	(0.14)	(0.14)	(0.14)	(0.14)	(0.14)
5	Wounded/injured in action	(0.55)	(0.46)	(0.37)	(0.24)	(0.18)	(0.14)	(0.12)	(0.10)
6	Captured and missing in action	(0.09)	(0.09)	(0.09)	(0.09)	(0.09)	(0.09)	(0.09)	(0.09)

Note. Factors expressed as number per 1,000 strength per day.

applying target analysis methods to selected critical target areas, he can evolve a basis for estimating nuclear losses. (See FM 101–10–3.)

4–11. Theater Estimates—Nonnuclear

a. General. The wide range of nonnuclear loss rates pertinent to potential US Army areas of operations makes infeasible the presentation of a single set of loss factors for worldwide application. Table 4–10 (European data base), however, illustrates what can be done in formulating a theater-level estimating tool using the admission to hospital rates shown in paragraphs 4–16 through 4–24. This table is designed for rough, quick estimates only and not as a substitute for factors carefully chosen to fit the specific assumptions and conditions of a particular operational plan. Nonbattle dead and missing are considered negligible for purposes of this estimate. (See FM 101–10–3 for theater estimates—nuclear.)

b. Estimation of Losses. Losses may be estimated by using table 4–10 or by—

(1) Determining battle casualty and nonbattle casualty losses of combat zone troops (para 4–9).

(*a*) Divisional.

(*b*) Nondivisional.

(2) Determining nonbattle accident/injury or troops in the COMMZ (para 4–10).

(3) Adding (1) and (2) above.

Section IV. EVACUATION AND HOSPITALIZATION

4–12. Classification of Patients

a. The term "patient" includes all sick, injured, or wounded personnel receiving medical care or treatment. For purposes of discussion herein, only those patients who require hospitalization or who are excused from performing military duty and not returned to duty within the calendar day of admission to a medical treatment facility are considered. Patients may be classified in several ways, depending on the purpose for which classification is made. It is important to note that not all casualties or nonbattle losses are *patients.*

b. In making estimates of patients or in computing hospital bed requirements, patients are usually classified by cause of disability into *sick/disease, nonbattle accident/injury,* and *wounded or injured in action.* The latter group falls in the category of battle losses.

c. Patients may be classified as *hospital* patients or *quarters* patients.

d. In calculating evacuation requirements, patients may be classified by—

(1) Severity of disability as *ambulatory* and *litter* patients.

(2) Suitability for evacuation as *evacuable* and *nontransportable* patients.

(3) Suitability for evacuation by air.

4–13. Admission Rate

The incidence of disease, injury, and wounding usually is expressed in the Military Services in terms of the number of admissions per 1,000 average strength per year. The admission rate may be for all causes, for all diseases, for all nonbattle accidents/injuries, or for all battle wounds or injuries. For purposes of planning for hospitalization requirements, the admission rate is expressed most conveniently as a *rate of admission to hospital* per 1,000 strength per day.

4–14. Sick/Disease and Nonbattle Accidents/Injuries

Sick/disease and nonbattle accident/injury cases among combat troops of a seasoned command, except in a particularly unhealthful region, may be expected to produce a rate of admission to medical treatment facilities (hospital and quarters combined) of about 3 per 1,000 per day (0.3 percent per day). This *average* rate can be expected at certain seasons of the year, without epidemics, to reach 0.5 percent or even more. As an estimate for planning, *one-third* of these patients may be expected to remain under treatment in their own organization (at aid stations) or in the division clearing stations *if there is no interference with the primary mission of reception, treatment, and evacuation of patients.* About two-thirds of the sick/disease and nonbattle accident/injury cases may be evacuated from the division area.

4–15. Wounded or Injured in Action

a. In estimating battle injuries and wounds, many variable factors must be considered. These include types of troops, their location in the theaters, types of engagement, and enemy capabilities. For this reason, it is desirable in such estimates to separate all troops in a theater into groups having approximately the same casualty rate and to compute the patients separately for each group on the basis of their numerical strength. For example, in a given theater the troops may be grouped into combat divisions, other ground troops in the combat zone, Air Force troops, and troops in the COMMZ. Each of these groups will have a different battle injury and wound rate, and the total patients in the theater will depend on the relative strength of each group.

b. In estimating battle injury and wound patients in a field army, an estimate based on combat divisions engaged usually is more accurate than one based on a rate for the corps or the field army.

c. Considerable variation in battle injury and wound admission rates among Air Force troops occurs, depending on the type of aircraft, type of mission flown, and amount of enemy air resistance. As an overall average, which necessarily must be modified to apply to any special situation, the battle injury and wound admission rate for all air troops can be taken as 0.2 per 1,000 per day. More commonly, casualties in Air Force troops are computed on the basis of the number of mannissions flown.

d. The number of battle injuries and wounds among COMMZ troops, except in special situations, has been negligible in the past. However, in future warfare the possible use of sophisticated conventional weapons and nuclear weapons or

*Table 4-11. Rate of Admission to Hospital per 1,000 Strength per Day**

1	1 Area	2 Sick/disease and nonbattle accidents/ injuries	3 Wounded or injured in action
2	North America	1.36	0.55
3	Europe	1.62	0.55
4	Asia	2.07	0.37
5	Africa	2.87	0.37
6	Middle East	1.96	0.37
7	South America	1.72	0.37

*In using experience factors from theaters of operation, remember that wounded or injured in action rates are not primarily related to geography. In using such rates for planning, the theater must be considered from the standpoint of type of combat, size and organization of forces, and weapon employment.

both in rear areas must be considered in estimating patient workloads.

4-16. Statistics

Table 4-11 indicates estimated hospital admission rates for broad geographical areas based on World War II and Korean War experience and subsequent study of the world health situation. These rates should be used only as a basis for planning gross theater-level medical support. Each rate represents a first-year experience typical of the area involved. (When data are aggregated for greater or lesser periods, the same experience source produces significantly different rates.) The medical planner must modify these rates, using the latest pertinent medical intelligence data, before he applies them in developing medical workloads and bed requirements for a specific plan or campaign.

4-17. Accumulation Factors

In estimating the hospital inpatient workload that will develop in a planned operation, knowledge of the rate at which hospital patients accumulate is necessary. The accumulation factor depends on two considerations. First, the length of treatment time varies considerably according to types of patients admitted. Second, the maximum length of time allowed for patient stay in an oversea hospital is limited by the applicable theater patient evacuation policy. Accumulation factors (table 4-12) indicate how many patients will have accumulated at specified periods of time after the beginning of operations, based on a constant admission rate of one patient per day and a constant, fixed evacuation policy. Separate sets of factors are provided for the different evacuation policies and for separate theater and CONUS accumulation of patients as affected by these evacuation policies.

4-18. Theater Patient Evacuation Policy

a. The theater patient evacuation policy is established by the Secretary of Defense, with the advice of the Joint Chiefs of Staff and on the recommendation of the theater commander. The policy establishes the maximum duration (expressed in days) of fixed hospitalization authorized in the theater. The projected hospitalization period for individual patients is computed from the date of admission to a fixed hospital. The policy does not imply that a patient is held in the theater for the limit of time set. Patients who are not expected to be returned to duty within the specified period will be evacuated from the theater as soon as the appropriate medical authority determines that further evacuation will not aggravate their disabilities.

b. The theater patient evacuation policy specified has direct impact on—

(1) The number and type of medical units required in the COMMZ to support the combat zone.

(2) Medical materiel requirements.

(3) The amount and timing of enginee support.

(4) The volume and type of transportation.

(5) The rate of patients returned to duty.

(6) Theater personnel replacement requirements.

(7) The number of hospital beds required in the CONUS to support the theater. The shorter the theater patient evacuation policy, the fewer the number of fixed hospitals and other supporting resources required in the theater, and the greater the number of hospital facilities required in the CONUS. Generally, for a longer evacuation policy the reverse is true.

c. Subordinate commands may establish intratheater patient evacuation policies in conformance with the theater patient evacuation policy and subject to approval by the theater commander. For example, a short evacuation policy usually is established for the combat zone hospitals so as not to impair their mobility or their capability to accommodate surges of patients. Intratheater patient evacuation policies must be flexible and

Table 4–12. Accumulation Factors (Periods of Estimate in Intervals of 30 Days)*

1	1	2	3	4	5	6	7	8	9	10	11	12
		THEATER FACTORS										
		Evacuation policy										
1	Period of estimate	120–day		90–day		60–day		30–day		15–day		Period of estimate
		Sick/disease and nonbattle accidents/ injuries	Wounded or injured in action	Sick/disease and nonbattle accidents/ injuries	Wounded or injured in action	Sick/disease and nonbattle accidents/ injuries	Wounded or injured in action	Sick/disease and nonbattle accidents/ injuries	Wounded or injured in action	Sick/disease and nonbattle accidents/ injuries	Wounded or injured in action	
2	30	13.43	22.96	13.34	22.39	13.11	21.04	11.40	16.44	7.32	10.80	30
3	60	16.46	33.38	15.95	31.00	14.67	25.57	11.40	16.44	7.32	10.80	60
4	90	17.67	37.36	16.51	32.87	14.67	25.57	11.40	16.44	7.32	10.80	90
5	120	17.94	38.27	16.51	32.87	14.67	25.57	11.40	16.44	7.32	10.80	120
6	150 and over	17.94	38.27	16.51	32.87	14.67	25.57	11.40	16.44	7.32	10.80	150 and over
		CONUS FACTORS										
7	30	0.13	1.55	0.22	2.12	0.45	3.47	2.16	8.07	6.24	13.71	30
8	60	0.76	6.88	1.27	9.26	2.55	14.69	5.82	23.82	9.90	29.46	60
9	90	1.80	13.43	2.69	17.92	4.80	25.22	8.07	34.35	12.15	39.99	90
10	120	3.06	20.35	4.49	25.75	6.33	33.05	9.60	42.18	13.68	47.82	120
11	150	4.05	26.59	5.48	31.99	7.32	39.29	10.59	48.42	14.67	54.06	150
12	180	4.67	31.66	6.10	37.06	7.95	44.36	11.21	53.49	15.29	59.13	180
13	210	5.05	35.86	6.48	41.26	8.32	48.56	11.59	57.69	15.67	53.33	210
14	240	5.29	39.40	6.72	44.80	8.56	52.10	11.83	61.23	15.91	66.87	240
15	270	5.44	42.37	6.87	47.77	8.71	55.07	11.98	64.20	16.06	69.84	270
16	300	5.54	44.89	6.97	50.29	8.81	57.59	12.08	66.72	16.16	72.36	300
17	330	5.60	47.02	7.03	52.42	8.87	59.72	12.14	68.85	16.22	74.49	330
18	360	5.64	48.79	7.07	54.19	8.92	61.49	12.18	70.62	16.26	76.26	360
19	390	5.67	50.26	7.10	55.66	8.94	62.96	12.21	72.09	16.29	77.73	390
20	420	5.70	51.46	7.13	56.86	8.97	64.16	12.24	73.29	16.32	78.93	420
21	450	5.71	52.39	7.14	57.79	8.98	65.09	12.25	74.22	16.33	79.86	450
22	480	5.72	53.14	7.15	58.54	8.99	65.84	12.26	74.97	16.34	80.61	480
23	510	5.73	53.71	7.16	59.11	9.00	66.41	12.27	75.54	16.35	81.18	510
24	540	5.73	54.16	7.16	59.56	9.00	66.86	12.27	75.99	16.35	81.63	540
25	570	5.73	54.52	7.16	59.92	9.00	67.22	12.27	76.35	16.35	81.99	570
26	600	5.73	54.79	7.16	60.19	9.00	67.49	12.27	76.62	16.35	82.26	600
27	630 and over	5.73	55.00	7.16	60.40	9.00	67.70	12.27	76.83	16.35	82.47	630 and over

*Based on constant admission of one per day under stated evacuation policies.

changed as dictated by the tactical situation. This does not imply that a patient is held at each level (combat zone or COMMZ) of medical treatment for the limit of time set. The time a patient spends in the combat zone evacuation chain does not apply to the theater patient evacuation policy time limit. In low-level conflicts, to include stability operations, and when combat zone hospitals (evacuation and field hospitals) have been designated as fixed-bed units, patients may be retained for longer periods. However, this in no way changes the mission of the COMMZ hospitals or the application of the theater patient evacuation policy. The application of any evacuation policy is a management tool in the selection of patients, since evacuation requires close and continuing coordination between all command surgeons concerned. The efficiency of medical support operations depends on the effective distribution of patients to those facilities that are capable of providing the required treatment in the shortest time possible.

(1) *During static situations.* During a slow-moving or stabilized situation, when patients are received at a fairly constant rate, combat zone hospitals may be permitted to approach the rated bed capacity by retaining patients who do not require treatment in a COMMZ general hospital.

(2) *During heavy combat.* When heavy combat causes a large number of patients, the intratheater patient evacuation policy must be adjusted to make available beds for current and anticipated needs; as a result, a lesser proportion of patients admitted is retained for treatment. Evacuation policies may differ among the hospitals in the field army area, depending on their location, facilities, staffs, and the types of patients received. The forward displacement of hospitals temporarily reduces the number of beds available for patients and results in a greater number of patients being evacuated to the COMMZ.

4–19. Dispersion Factor

At any given time, a certain proportion of theater fixed beds will not be immediately available to patients because of "dispersion." (A 20-percent allowance for dispersion generally was used during World War II.) Factors contributing to dispersion are as follows:

a. A certain number of beds must be packed and in transit. The greater the mobility of the troops, the greater the allowance required.

b. Smaller troop units operating at some distance from the main body of troops must be supported by complete hospital units even though these units are not likely to use fully the hospital facilities provided.

c. The general practice of prescribing separate wards for patients of different sexes, cases of contagious diseases, and cases requiring different types of treatment necessitates a safety margin in each ward because the proportion of the various cases will vary from time to time.

d. Factors to be applied to the number of patients to convert to the number of fixed beds required under each specified dispersion allowance are as follows:

Dispersion allowance (percentage)	*Dispersion factor*
5	1.05
10	1.11
15	1.18
20	1.25
25	1.33
30	1.43
35	1.54
40	1.67
45	1.82
50	2.00

4–20. Disposition Factors

The factors in table 4–13, expressed as percentage of total hospital admissions, may be used to develop gross theater-level estimates for disposition of sick/disease and nonbattle accident/injury patients and of battle injury and wound patients for each of the specified theater evacuation policies. Data for detailed calculations of disposition under various policies are in FM 8–55.

4–21. Fixed-Bed Requirements—Basic Data

a. Method. For planning purposes, requirements for fixed beds in a theater of operations can be determined by using a factor of 7 percent of the theater of operation strength. This method is recommended for planning for an entire theater of operations only and is not applicable for individual segments of any theater. Computation of fixed-bed requirements for specific situations, or in cases that require more detailed data, should be made using the method described in succeeding paragraphs.

b. General. To compute bed requirements for any specific situation, certain basic data are necessary. These are—

(1) Time period covered. (Period of estimate, usually 30-day intervals.)

Table 4–13. Disposition Factors

1	1 Evacuation policy	2 Sick/disease and nonbattle accidents/injuries: Died	3 Sick/disease and nonbattle accidents/injuries: Returned to duty	4 Sick/disease and nonbattle accidents/injuries: Evacuated from theater	5 Wounded or injured in action: Died	6 Wounded or injured in action: Returned to duty	7 Wounded or injured in action: Evacuated from theater
2	180-day	0.21	96.85	2.94	2.07	81.76	16.17
3	150-day	0.20	96.71	3.09	2.06	78.81	19.13
4	120-day	0.19	95.08	4.73	2.05	74.55	23.40
5	90-day	0.18	93.39	6.43	2.03	68.11	29.86
6	60-day	0.17	90.59	9.24	1.95	56.05	42.00
7	30-day	0.15	82.35	17.50	1.88	32.12	66.00
8	15-day	0.14	62.36	37.50	1.74	16.52	81.74

(2) Troop strength. (Population covered.)

(3) Daily admission rate. (Rate of generation of patients.)

(4) Experience factors for accumulation of patients, which is dependent on evacuation policy. (Rate of patient-load growth.)

(5) Dispersion factor. (Patient-bed conversion factor.) All experience factors ((4) above) are based on the proportion of those patients admitted to hospital on one day and remaining on each succeeding day. When these daily remaining factors (proportions) are accumulated by intervals of 30 days, the resultant accumulation factors can be used directly, provided the admission rate, troop strength, and evacuation policy are assumed to be constant. However, when any or all elements of admission rate, troop strength, or evacuation policy vary for one or more of the 30-day intervals in the time period covered, the daily remaining factors may be accumulated through a 30-day period, at which time admissions cease, and then diminished each succeeding day thereafter. For tables of factors to be used for such computations and their detailed method of use, see FM 8–55.

4–22. Computations

a. Formula. Given the items of basic data, the fixed-hospital bed requirements for a specific situation, wherein the elements of admission rate, troop strength, and evacuation policy are assumed to be constant during the time period covered, can be computed according to the following formula:

Daily admission rate × Average strength (thousands) × Accumulation factor at time period covered in estimate × Dispersion factor = Fixed beds

Example. Theater A has a troop strength of 500,000. Expected daily admission rates per 1,000 are as follows: sick/disease and nonbattle accidents/injuries, 0.73; conventional battle injuries and wounds, 0.34. Theater evacuation policy is 120 days and the dispersion allowance is 20 percent. How many fixed-hospital beds will be required at the end of 90 days?

	Admission rate		*Troop strength (thousands)*		*Accumulation factor (90 days)*		*Dispersion factor*		*Fixed beds*
Sick/disease and nonbattle accidents/injuries	0.73	×	500	×	17.67	×	1.25	=	8,062
Conventional battle losses	0.34	×	500	×	37.36	×	1.25	=	7,939
Total fixed beds required at the end of 90 days									16,001

In the above example, the accumulation factors were obtained from table 4–12 (para 4–17). The proper accumulation factor is shown on line 4 in both instances—column 2 for sick/disease and nonbattle accident/injury patients and column 3 for battle injury and wound patients. The dispersion factor was obtained from paragraph 4–19*d*.

b. Nuclear, Biological, and Chemical Operations. While the preceding computations afford a relatively sound basis for determining fixed-bed requirements, nuclear, biological, and chemical operations introduce other factors. The experience factors in this chapter have been derived in the presence of a certain pattern of wounding and are related to average admission rates over long periods. The pattern of wounding from nuclear, biological, and chemical munitions probably will alter accumulation factors. Of greatest significance, however, may be the characteristically wide fluctuation of daily admission rates resulting from these munitions. This characteristic may ruin any attempt to employ average admission

rates. The problem will be one of handling recurring peakloads of patients. This problem must be met either by efficient use of theater hospital facilities or by rapid and extensive evacuation to the CONUS. For this reason, the planner may find it more realistic to submit fixed-bed requirements as a feasible percentage of troop strength supported and build the maximum flexibility into the resulting medical service. There are, however, factors and methods for estimating hospitalization and evacuation requirements. For data pertaining to nuclear warfare, see FM 101–10–3.

4–23. CONUS

a. Fixed beds are required in the CONUS for those troops who do not depart for theaters of operations. When new recruits are inducted in large numbers, morbidity tends to be rather high, and beds equal in number to as much as 4 percent of the CONUS strength may be necessary. After the period of training is over, beds equal in number to 3 percent of the CONUS strength may be sufficient.

b. Bed requirements must be computed for those cases evacuated from theaters of operations. These additional beds are estimated on the basis of the expected numbers of evacuees arriving in the CONUS (sick/disease and nonbattle accident/injury and battle injury and wound cases are considered separately) and the average duration of stay of such cases in CONUS hospitals (table 4–14).

c. Using the data given for the problem in paragraph 4–22*a*, the accumulation of theater of operation patients in CONUS hospitals after 90, 150, and 360 days of operation in the theater (under a 120-day evacuation policy) may be determined as follows:

	Daily admission rate		*Troop strength (thousands)*		*Accumulation factors* 90 days	150 days	360 days
Sick/disease and nonbattle accidents/injuries	0.73	×	500	×	1.80	4.05	5.64
Conventional battle losses	0.34	×	500	×	13.43	26.59	48.79
Total patients—							
Sick/disease and nonbattle accidents/injuries					657	1,478	2,059
Conventional battle losses					2,283	4,520	8,294
					2,940	5,998	10,353
Dispersion allowance—							
20 percent				×	1.25	× 1.25	× 1.25
Total beds required					3,675	7,498	12,941

In the above example, the accumulation factors were obtained from table 4–12 (lines 9, 11, and 18 respectively—column 2 for sick/disease and nonbattle accident/injury patients and column 3 for

*Table 4–14. Accumulation of Theater of Operation Patients in CONUS Hospitals (120-Day Evacuation Policy)**

1	1	2	3	4	5	6	7	8
	Cause of admission	Daily hospital admission rate per 1,000	Accumulation of theater patients in CONUS hospitals per 1,000 theater strength after number of days indicated following start of operations in the theater					
			60	90	120	180	260	540
2	Sick/disease and nonbattle accidents/injuries	1.0	0.60	1.07	1.50	3.11	4.08	4.17
3	Wounded or injured in action	0.6	2.05	5.20	8.79	16.32	26.43	28.48
4	Total patients		2.65	6.27	10.29	19.43	30.51	32.65
5	Increase by 28 percent		0.66	1.57	2.57	4.86	7.63	8.16
6	Total beds required		3.31	7.84	12.86	24.29	38.14	40.81

* Based on July to December 1944 ETO admission rates.

Table 4–15. Sick/Disease and Nonbattle Accidents/Injuries Evacuated From Theater

1	1	2	3	4	5	6	7
	Evacuation policy	Percentage during specified interval					
		1–30 days	31–60 days	61–90 days	91–120 days	121–150 days	Total evacuated from theater
2	120-day	0.44	1.73	1.49	0.88	0.19	4.73
3	90-day	0.74	2.83	2.26	0.60		6.43
4	60-day	1.51	5.57	2.16			9.24
5	30-day	7.22	10.08				17.30
6	15-day	26.89	10.61				37.50

Table 4-16. Wounded or Injured in Action Evacuated From Theater

1	1 Evacuation policy	2 Percentage during specified interval: 1-30 days	3 31-60 days	4 61-90 days	5 91-120 days	6 121-150 days	7 Total evacuated from theater
2	120-day	5.15	12.62	4.06	1.34	0.23	23.40
3	90-day	7.07	16.74	5.07	0.98		29.86
4	60-day	11.56	25.84	4.60			42.00
5	30-day	26.90	39.10				66.00
6	15-day	49.99	31.75				81.74

Table 4-17. Capacity of Transportation for Patient Evacuation

1	1 Type of transportation	2 Patients: Ambulatory	3 Patients: or Litter
2	Transport airplane (C-7A) [a]	32	20
3	Transport airplane (C-123) [a]	61	50
4	Transport airplane (C-124) [a]	200	127
5	Transport airplane (C 130) [a]	92	74
6	Transport airplane (C-133) [a]	120	55
7	Transport airplane (C-135) [a]	126	44
8	Transport airplane (C-141) [a]	154	80
9	Army airplane (O-1A, E)	1	
10	Army airplane (U-1A)	9	3
11	Army airplane (U-6A)	4	2
12	Army airplane (U-8D, F)	5	
13	Army airplane (U-21A)	10	3
14	Army helicopter (OH-6A)	2	
15	Army helicopter (OH-13S)	2	2
16	Army helicopter (OH-23G)	2	2
17	Army helicopter (UH-1B)	7	3
18	Army helicopter (UH-1D)	12	6
19	Army helicopter (UH-1H)	14	6
20	Army helicopter (CH-47B, C)	33	24
21	Bus, motor, 37-passenger, convertible.	37	18
22	Truck, ambulance, frontline, ¼-ton, 4x4.	5	3
23	Truck, ambulance, field, ¾-ton, 4x4	8	4
24	Truck, cargo, 2½-ton, 6x6	16	18
25	LARC-5	[b] 25	12
26	LARC-60	125	
27	Railway car, coach (US)	52	
28	Railway car, coach (foreign)	57-72	
29	Pullman car (US)	48	32
30	Sleeping car (foreign)	32	32
31	Ambulance car, ward (US)	27	27
32	Ambulance car, ward (foreign)	24	30
33	Ambulance car, personnel (foreign)	21	21
34	LVT	12	6
35	LVTP-5	34	
36	LVTP-6	20	
37	LCVP	36	[c] 17
38	LCM (6)	120	30
39	LCM (8)	[d] 200	[e] 50
40	LCU	400	100
41	LST	180	120
42	Hospital ship (AH)	802	802

[a] Based on capacity.
[b] No troop seats provided.
[c] Only seven litters if LCVP is to be hoisted aboard for loading.
[d] In addition to litter patients.
[e] In addition to ambulatory patients.

battle injury and wound patients). The dispersion factor was obtained from paragraph 4-19*d*.

d. An allowance to the above figures must be added, when appropriate, for care of Navy, Air Force, and allied military personnel; allied civilians; and prisoners of war. The additional number of fixed beds for such purposes will depend on the particular area involved, and no definite figures can be given.

4-24. Patient Evacuation—Planning Factors

Percentages of personnel evacuated from theater out of admissions during 1 month of operations are shown in tables 4-15 and 4-16.

4-25. Capacity of Transportation

The capacity of selected items of transportation equipment for evacuating patients is shown in table 4-17.

a. Exact figures for Army aircraft in columns 2 and 3 must be computed on maximum gross weight.

b. Cargo vehicles are used only when ambulances are not available.

See footnote at end of table

4–26. Time Elements of Evacuation

Factors for evacuation of personnel (including loading and unloading) are indicated in the subparagraphs below.

a. Litter Squads.

(1) Average terrain, four-man squad—900 meters and return in 1 hour.

(2) Mountainous terrain, six-man squad—370 meters and return in 1 hour.

b. Ambulance, Motor, During Combat in the Division Area. Eight kilometers and return in 1 hour.

c. Aircraft.

(1) Helicopter—80 kilometers one way in 1 hour.

(2) Transport airplane—160 kilometers one way in 1 hour.

(3) Army airplane—120 kilometers one way in 1 hour.

4–27. Army Medical Units

a. For detailed information on Army medical units, see chapter 6, FM 101–10–2. Table 1–4 lists the types of medical units that may be found in a field army.

b. Table 4–18 contains information on hospital density in the theater.

Table 4–18. Evacuation and Hospitalization Factors

	1	2
1	Kind of hospitalization	Quantity required
	Mobile hospitals:	
2	Evacuation, semi-mobile.	2 per division.
3	Mobile army surgical.	1 per division.
4	Fixed-hospital beds in the theater of operations.	7 percent of theater of operation strength

Section V. PRISONERS OF WAR

4–28. General

a. To insure the availability of necessary resources and to make necessary arrangements for the reception, care, use, and disposition of enemy prisoners of war and enemy civilian internees, a planner estimates as closely as possible for a given period or for a specific operation the number of enemy—

(1) Prisoners of war who will be captured.

(2) Civilians who will be interned.

(3) Prisoners of war who will be retained in the theater of operations.

(4) Prisoners of war who will be evacuated from the theater of operations.

b. Extensive nonnuclear warfare experience factors are available on the capture and evacuation of enemy prisoners of war. Based on these experience factors, capture and evacuation rates, expressed as averages, have been developed and incorporated into this section. Nevertheless, planners should remember that prisoners characteristically are not captured at a uniform rate and the averages cited in this section may be altered greatly by such influencing factors as—

(1) Enemy morale.

(2) Avenues of withdrawal open to enemy troops.

(3) Ability of friendly forces to encircle or cut off enemy units.

(4) Type of operation in which friendly forces are engaged, e.g., attack, defense, retrograde.

(5) Operational environment.

(6) Relative strength and sophistication of enemy forces.

(7) Intensity and effectiveness of ideologial indoctrination of enemy troops.

(8) Intensity and effectiveness of friendly psychological operations.

c. Available experience factors regarding the internment and security of enemy civilians do not permit the development of planning factors as reliable as those for enemy prisoners of war. The number of enemy civilians who will be interned in specific situations may vary greatly. Planners may, however, develop workable estimates, using the factors cited in this section, as modified by such considerations as—

(1) Extent to which enemy civil authorities and agencies work with enemy military forces.

(2) Intensity and effectiveness of ideological indoctrination of enemy officials and the general populace.

(3) Intensity and effectiveness of friendly

psychological operations aimed at influencing the enemy civil populace.

(4) Extent to which the enemy populace supports the political and military goals of the enemy government.

4–29. Prisoner of War Capture Rates—Nonnuclear Conditions

a. General. The figures and planning factors presented in this paragraph are based primarily on the experiences of US Army forces in World War II and the Korean War. Of necessity, the experiences represent those of the types of organizations, principally divisions, that existed during those two wars. Present-day infantry, armored, and airborne divisions are sufficiently similar to their predecessor organizations to make these experience factors applicable. In the case of the infantry division (mechanized), organized since the Korean War, the figures and factors cited represent interpolations based on the organizational and operational characteristics of the new organization. Data have not been developed for the airmobile division.

b. Division and Corps Estimates. Using the rates set forth below, estimates may be prepared directly for divisions and certain nondivisional units. By combining appropriate estimates developed from these tables, corps capture rates may be developed.

(1) *Equal force estimates.* When the number of opposing enemy forces and their sophistication are approximately equal to US forces, the average number of enemy prisoners of war who may be expected to be captured per month can be estimated by using the percentage factors in table 4–19.

(2) *Unequal force estimates.* For the preparation of estimates for divisions (or comparable task forces) and corps in selected types of tactical operations against a numerically inferior enemy, the daily rates in table 4–20 may be used. These figures apply to all types of divisions, except the airmobile division and as otherwise indicated, and are based primarily on the experiences of US divisions in World War II and the Korean War against veteran enemy troops. In these instances, the US forces were numerically superior by about 2 to 1.

c. Theater Estimates. For overall estimates at theater under nonnuclear conditions, the factors in table 4–21 may be used. Planners should be fully aware of limitations of these factors. The factors represent averages either derived from World War II and Korean War experience or interpolated from such experience. Since prisoners

Table 4–19. Prisoner of War Capture Rates—Equal Force Estimates

	1	2
1	Troops	Percentage of strength
2	Infantry divisions	1.35
3	Infantry divisions (mechanized)	1.10
4	Armored divisions	0.80
5	Airborne divisions	0.65
	Corps and field army nondivisional units:	
6	Armored cavalry regiments	0.85
	Separate combat brigades:	
7	Infantry brigades	0.90
8	Infantry brigades (mechanized)	0.75
9	Armored brigades	0.55
10	Airborne brigades	0.45
11	Other units	(*)

*Negligible.

Table 4–20. Prisoner of War Capture Rates—Unequal Force Estimates

	1	2
1	Force and operation	Number of prisoners captured per day
2	Average per division in all types of operations.	47
3	Division in attack of a defensive position	50
4	Division in attack of a defensive position with complete surprise attained.	700
5	Division in defense of a position against an unsuccessful enemy attack.	300
6	Infantry division (mechanized) (or task force) in an encirclement operation.	815
7	Armored division (or task force) in an encirclement operation.	1,000

Table 4–21. Prisoner of War Capture Rates

	1	2	3	4	5
		Enemy prisoners of war per month			
				Enemy capitulation	
1	Unit	Defense (US)	Offense (US)	First month	Succeeding month
2	Infantry division	230	3,500	6,000	30,000
3	Infantry division (mechanized).	175	3,550	6,000	30,000
4	Armored division	117	3,600	6,000	30,000
5	Airborne division	155	2,550	6,000	30,000

are not captured at uniform rates, special preparations are made for the reception of unusual numbers when tactical plans contemplate decisive action, such as cutting major routes of withdrawal or driving large enemy forces against an obstacle or when widespread enemy capitulation is anticipated.

4–30. Prisoner of War Capture Rates—Nuclear Conditions

a. Experience factors are lacking on which to base estimates of prisoner of war capture rates under nuclear conditions. Using target analysis methods, however, planners can estimate enemy casualties and determine approximately the number of enemy personnel remaining in the strike area and subject to capture in the exploitation phase.

b. Because the employment of nuclear weapons produces a demoralizing effect on enemy troops, an overall increase in the number of enemy prisoners of war captured can be expected. In the absence of more definitive guidance, planners may apply a multiplier factor of 2 to the rates set forth in paragraph 4–29.

4–31. Evacuation of Prisoners of War From the Theater of Operations

a. The Department of Defense, using recommendations from DA or the Joint Chiefs of Staff, establishes the prisoner of war evacuation policy for the theater of operations. This policy is subject to change as the strategic and tactical situations change. Conceivably, some campaign plans may provide for the retention of all enemy prisoners of war in an active theater; in other situations, all or a major portion of the prisoners may be evacuated from an active theater. The evacuation policies for each major specific campaign are determined early in the planning phases so that the necessary resources for both retention and evacuation may be made available. The evacuation policy in all events must be consistent with the terms of the Geneva Conventions of 1949 and other applicable international agreements.

b. Table 4–22 reflects the number of enemy prisoners of war, expressed in terms of division slice, that will normally be retained in an active theater for labor and associated purposes. The figures in this table are based on empirical data derived from past experience, primarily of US forces in Europe during World War II.

Table 4–22. Retention of Prisoners of War in an Active Theater

	1	2
1	Purpose for retention in theater	Number per division
2	To provide a theater PW labor pool	4,000
3	To provide for PW housekeeping, administration, etc.	2,666
4	Total (division slice)	6,666

4–32. Enemy Civilian Internees

a. Internment. The Department of Defense or DA establishes broad policies on the internment of enemy civilians. In certain limited field operations, such as against an unsophisticated enemy in a stability operation environment, the number of enemy civilians interned may exceed the number of enemy prisoners captured. When military operations result in the movement of large numbers of refugees, potential civilian internees are invariably among the refugees. While no dependable internment rates can be established, the following percentage factors may be used generally in preparing estimates until such time as more specific guidance and information become available:

(1) Factors applicable to the local static population—

When the civilian population is—	*Percentage of the population interned*
Mainly hostile	0.1 to 0.5
Mainly friendly	0.05 to 0.1

(2) Factors applicable to the estimated number of refugees (estimates derived from these factors are added to those developed from the application of the factors in (1) above)—

When the refugees are—	*Percentage of the refugees interned*
Mainly hostile	2 to 5
Mainly friendly	0.1 to 0.5

b. Evacuation. In accordance with the provisions of the Geneva Convention Relative to the Protection of Civilian Persons in Time of War, civilian internees normally are not evacuated from the theater of operations but are retained within the occupied territory. Civilian internees are not evacuated beyond the bounds of the occupied territory except when, for material reasons, avoidance of such displacement is impossible.

4–33. Crime Rates

a. To make the necessary arrangements for the detection, investigation, and disposition of crimi-

nal incidents requires the preparation of an advance estimate of the number of such incidents that will occur within a given time in a command. Experience indicates that there will be little variance in the overall crime rate between peacetime and wartime. In a theater of operations, a variance will exist between the combat zone and the COMMZ, with the bulk of the serious crimes occurring in the latter.

b. Based on extensive statistical data, covering both peacetime and wartime, the average annual crime rate within any command will approximate 37.06 serious crimes per 1,000 military population. This planning factor increases in dependability in direct proportion to the size of the command; and, in a theater of operations, it is best suited for theater-level planning.

c. Crime rate planning factors may be used as the basis for determining the personnel requirements for criminal investigators in a command. Experience shows that one criminal investigator can effectively accomplish an average of 34 criminal investigations per year; therefore, on the average, criminal investigators should be assigned to a command on the basis of one to approximately 1,000 military personnel.

4–34. Military Prisoners

a. General. The confinement, care, employment, and disposition of US military prisoners are command responsibilities that planners should remember in preparing for the conduct and support of tactical operations. The number of US military prisoners that must be guarded, processed, employed, evacuated, and restored to duty is of direct interest and application to planners in arriving at requirements for transportation, construction, and personnel. The factors and figures herein, with respect to nonnuclear conditions, are based on extensive statistical data derived from commands of various types and sizes in a wide range of operational environments. These factors may be applied to a command of any size, but will prove most dependable for theater-level planning. The factors cited for nuclear conditions represent a general increase over the nonnuclear factors, based on the assumption that the employment of nuclear weapons will have an overall demoralizing effect and will create an increased opportunity for crime. Planners must remember that these factors *are not* based on experience and may require extensive alteration in a specific situation.

b. Confinement Rates.

	Conditions	*Percentage of command population*
(1)	Nonnuclear	1
(2)	Nuclear	2

c. Evacuation From the Theater of Operations and Retention Therein. The Department of Defense or DA establishes basic policies regarding the evacuation of US military prisoners from the theater. These policies may change depending on variations in both the strategic and the tactical situations. Normally, US military prisoners who are not restorable to duty, who have been sentenced to punitive discharge, or who have more than 6 months to serve are evacuated to the CONUS. Of all US military prisoners confined in the theater of operations, the following factors expectedly may apply under both nuclear and nonnuclear conditions when normal evacuation policies have been established:

	Nuclear and nonnuclear conditions	*Percentage*
(1)	Evacuated to CONUS disciplinary barracks	34
(2)	Retained in theater rehabilitation training centers	30
(3)	Retained in stockades in the theater	36

d. Restoration Rates. For planning purposes, the following factors regarding the restoration of US military prisoners to duty generally may apply:

	Place of confinement	*Percentage*
(1)	From stockades	100.0
(2)	From rehabilitation training centers	39.0
(3)	From disciplinary barracks	7.7

Section VI. PERSONNEL SERVICES

4–35. Decorations

Table 4–23 contains decoration data per 10,000 troops for a month.

Table 4–23. Decoration Data

	1	2
1	Decoration	Approximate average
2	Distinguished Service Cross	9
3	Distinguished Service Medal	1
4	Silver Star	103
5	Legion of Merit	20
6	Distinguished Flying Cross	6
7	Soldier's Medal	7
8	Bronze Star Medal	565
	Heroism	(270)
	Meritorious Achievement	(295)
9	Air Medal	255
10	Mertorious Service Medal	
11	Commendation Medal	485
12	Purple Heart	1,175

4–36. Mail

Table 4–24 pertains to mail per 10,000 troops per month. Table 4–25 (colm 3–5) pertains to mail per 1,000 troops per month.

4–37. Chaplain Planning Factors

a. When chaplain coverage is provided for a force, personnel planning factors are as follows:

(1) Chaplain positions are authorized for units of the field army in the ratio of 1 for 700 troops or major fractions thereof.

(2) Chaplain positions are authorized all other units in the ratio of 1 for 850 troops or major fractions thereof.

(3) Above authorizations exclude chaplain positions for hospitals and convalescent centers. Planning factors for medical units are contained in AR 570–2.

(4) One primary duty chaplain assistant position is authorized each chaplain position. Additional administrative chaplain assistant positions at staff levels above battalion are authorized by TOE and tables of distribution and allowances.

(5) Additional details on planning facors are in AR 611–101, AR 611–201. and FM 16–5.

b. Chaplain equipment and supply authorizations are based on appropriate TOE's, CTA 50–922, and SB 700–50. Chaplain ecclesiastical equipment and supply are classified as expendable and nonexpendable.

(1) Nonexpendable ecclesiastical items mainly consist of line items authorized in appropriate TOE's as well as items of individual issue in the possession of chaplains. These items normally are carried with the unit chaplain.

(2) The theater or force commander may authorize other nonexpendable ecclesiastical items based on CTA 50–922. Authorization depends on such factors as the mission of the combat forces, their relative stability and the extent of combat activity, the types of personnel (to include prisoners of war and civilian internees) to receive chaplain support, and the amount of permanent or semipermanent chapel construction authorized or the religious facilities available.

(3) Expendable items of ecclesiastical supply are provided in accordance with the number of chaplains and auxiliary chaplains authorized and the number of religious services conducted (to include services conducted for prisoners of war and civilian internees). Authorized peacetime allowances are contained in SB 700–50. Whether some of these items may be procured locally depends on the geographical area. Table 4–26 lists certain expendable ecclesiastical supplies essential in an active theater.

4–38. Legal Services

a. For planning, the workloads indicated in tables 4–27 and 4–28 may be expected in oversea theaters during hostilities. Actual workloads may vary depending on the theater. duration of hostilities, and forces in the theater.

b. Judge advocate general (JAG) service organization detachments (teams) (TOE 27–500) are theater army troops that may be employed to augment organic JAG sections, when needed.

Table 4-24. Mail Data [1] (Based on Needs of 10,000 Troops Per Month)

1	Mail	Wartime			Peacetime					
					Dependents authorized			Dependents not authorized		
		Lb	MTON	STON	Lb	MTON	STON	Lb	MTON	STON
	To the theater:									
	Air—									
2	Official	25,237		12.619	19,156		9.578	26,069		13.034I
3	Personal	114,630		57.315	54,038		27.019	76,462		38.231
	Surface [2]—									
4	Official	8,653	22.652		21,414	56.058		19,137	50.097	
5	Personal	49,036	128.366		53,723	140.636		39,385	103.102	
	To the CONUS:									
	Air—									
6	Official	8,450		4.225	6,534		3.267	7,858		3.929
7	Personal	22,145		11.073	30,564		15.282	17,698		8.849
	Surface [2]—									
8	Official	7,432	19.455		3,769	9.866		1,621	4.243	
9	Personal	21,482	56.236		43,344	113.466		7,094	18.571	

[1] Table was developed by equating lbs of mail transported to and received from Vietnam (wartime), Germany (dependents authorized), and Korea (dependents not authorized), with troop strengths for these countries during FY 69.

[2] Conversion factor for surface mail is 382 lb per MTON. (From US Post Office Department.)

Table 4-25. Postal Services

1	1 Item	2 Lb per man per day	3 STON per 1,000 men per month	4 MTON per 1,000 men per month	5 Sacks or puches of mail per 1,000 men per month
2	Letter mail [a]	0.028	0.421	[b] 2.41	[c] 24.0
3	Parcel post [d]	0.166	2.490	[c] 15.56	----------
4	Postal supplies	0.011	0.171	[f] 0.60	----------
5	Total postal	0.205	3.082	18.57	[g] 124.5

[a] Moved by air.
[b] Computed at 10 pouches per MTON (estimated).
[c] Computed at 185 lb per pouch of mail (estimated).
[d] Volume may be expected to increase 2.3 times during October and November because of Christmas mail.
[e] Computed at 8 sacks per MTON (estimated).
[f] Conversion factor 3.5 MTON/STON (estimated).
[g] Computed at 40 lb per sack of mail (estimated).

Table 4-26. Combat-Essential Expendable Ecclesiastical Supplies

1	1 Item	2 Unit	3 Lb	4 STON	5 Allowances [a]	6 Basis of issue
2	Candles, altar, 100-percent beeswax, 24 per box, 8 per lb	Box	3.0	0.0015	2.0	Per chaplain per quarter
3	Fair linen, altar, white-cloth, 42-in. long, 14 in. wide	Each	(b)	(b)	2.0	As required per chaplain
4	Host, Communion, 1-1/8 in. diam, 125 per pkg, 4 pkg per box	Box	0.5	(b)	(c)	1 Host per communicant
5	Host, Communion, 2-1/2 in. diam, 25 per pkg	Package	0.1	(b)	(c)	As required per using chaplain
6	Hymnbook, song and service, hard-cover, 6-3/4 in. long, 4-7/8 in. wide	Each	0.25	(b)	0.5	Per military person in field unit
7	Religious literature, miscellaneous	Package	50.0	0.025	(d)	Per chaplain per quarter
8	Supplies, kosher, perishable [e]	Case	30.0	0.015	(d)	Per Jewish chaplain per month
9	Juice, grape, sacramental use, 24-pt bottles or cans per case	Case	36.0	0.018	(c)	1 bottle or can per 75 communicants
10	Wine, angelica, white, 12 1/5-gal bottles per case	Case	36.0	0.018	1.0	Per chaplain per quarter
11	Wine, kosher, red, 12 1/5-gal bottles per case	Case	38.0	0.019	1.0	Per 24 Jewish personnel per Passover/ Seder. Plus per Jewish chaplain per quarter.

[a] To these allowances must be added a percentage for breakage, pilferage, spoilage. This percentage will vary depending on climate, type of handling, and shipping and supply security.
[b] Negligible.
[c] As required.
[d] Not applicable.
[e] Transported by air from nearest source of procurement.

Table 4-27. Legal Service Planning Factors—Workload Per 10,000 Men

	1	2	3	4	5
1	Area of responsibility	GCM per month	Claims per month	War crimes incidents per month	Legal assistance matters per month
2	Combat zone	4	25	15	50- 75
3	Communications zone	6	150	10	100-150

Table 4-28. JAG Detachment Workloads

	1	2
1	Unit [1]	Work unit per month
2	JAG claims svc team FA	40-50 claims.
3	JAG war crimes team GA	10-15 incidents.
4	JAG GCM trial team HA	10-15 GCM.
5	JAG GCM trial team HB	20-25 GCM.
6	JAG legal asst team IA	250-300 cases.
7	JAG procurement law teams [2]	

[1] For capabilities, assignment, strength, basis of allocation, etc., of the teams listed in this table, see TOE 27-500 or FM 101-10-2.

[2] See TOE 27-500 or FM 101-10-2.

CHAPTER 5

COMBAT SERVICE SUPPORT—SUPPLY (STANAG 2115)

Note. This chapter is in consonance with NATO STANAG 2115, *Fuel Consumption Unit.*

Section I. SUPPLY

5–1. General

a. Supply. A major portion of the combat service support function concerns the procurement, distribution, and maintenance of all items necessary for the equipment, maintenance, and operation of a military command, including food, clothing, equipment, arms, ammunition, fuel, medical support, materials, and machinery of all kinds.

b. Fundamentals of Supply.

(1) Supply must be responsive in detail, rapid in action, and simple in operation. It must be adjustable to requirements of supported units and capable of satisfying fluctuating demands.

(2) The organization for supply encompasses—

(*a*) A system for stocking during peacetime for wartime requirements of combat-essential items to insure an automatic supply capability to sustain operations pending the establishment of wartime supply procedures or the reestablishment of normal peacetime supply channels. Theater commanders and the Commanding General, US Continental Army Command (CONARC), specify these combat-essential items in accordance with AR 11–8.

(*b*) Personnel and facilities to receive, store, maintain, and distribute or issue supplies and equipment.

(*c*) An action agency at each echelon of supply distribution that responds to requirements by directing issue, calling supplies forward for delivery to user, or placing demands on the higher echelon for action, whichever is most appropriate.

(*d*) Personnel to plan the supply operation and to coordinate or supervise its execution; to assign supply missions; and to recommend or enforce policies, allocations, and priorities.

(3) The supply operation recognizes the potential of automatic data processing equipment. It uses automatic data processing equipment, together with an effective communication system, to compile and transmit supply data and process management information. Additionally, the supply operation includes—

(*a*) A responsive requisitioning system.

(*b*) An inventory control (or supply management) system capable of providing current information on the amount, location, and condition of stocks on hand; of balancing current and anticipated requirements against known assets; and of judiciously disposing of excess stocks.

(*c*) Supply on a functional basis in both the field army and the communications zone (COMMZ).

(*d*) Close coordination and exchange of information with continental United States (CONUS) support systems and provision for the transition from a peacetime environment to a wartime posture.

(*e*) Designation or categorization of mission to relate supply to other combat service support operations and to facilitate assignment of supply responsibilities to specific levels of command. These designations are—

1. Direct support supply, which is the supply support provided to using troops and units. In theaters of operations, direct support supply is essentially customer oriented and retail in nature.

2. General support supply, which is the supply support provided to the direct support system. General support essentially is commodity oriented and wholesale in nature.

5–2. Ten Classes of Supply

The 10 classes of supply are listed in table 5–1. These classes of supply replace the five classes of supply existing at the time of World War II and the Korean War.

Section II. CLASS I AND III SUPPLY

5–3. Characteristics of Class I Supply

Table 5–2 gives characteristics of standard rations and table 5–3 gives time elements. While the figures in table 5–3 are an average for combat conditions, they should be used only in lieu of actual experience. See FM 10–60 for further details.

5–4. Class III Supply

The data in tables 5–4 through 5–10 should be used in estimating petroleum, oil, and lubricant (POL) requirements. Consumption rates for class III (para 5–27) in pounds per man per day and gallons per man per day are based on the following consumption factors:

Equipment	*Basis*	*Table number*
Army aircraft	1 cruise hour	5–4
Vehicles and vehicular equipment.	1 km on solid, dry, level roads.	5–5
Construction equipment.	1 hour normal operating time	5–6
Power units	1 hour normal operating time	5–7
Marine equipment	1 hour normal operating time	5–8
Other equipment	1 hour normal operating time	5–9
Bulk petroleum capacities.	----------	5–10

Table 5–1. Ten Classes of Supply

1	1 Major classification	2 Subclassification [1]
2	I—Subsistence----------	A—Air (in-flight rations). R—Refrigerated subsistence. S—Nonrefrigerated subsistence (less combat rations). C—Combat rations. [2] W—Water (when delivered as a supply item).
3	II—Clothing, individual equipment, tentage, organizational tool sets and tool kits, hand tools, and administrative and housekeeping supplies and equipment.	A—Air. B—Ground support materiel. [3] E—General supply items. F—Clothing and textiles. G—Communications-electronics. K—Tactical vehicles. L—Missiles. M—Weapons. Q—General equipment. P—U.S. Army Security Agency materiel. U—Communications security materiel. T—Industrial supplies. [4] Z—Chemical.
4	III—POL: petroleum fuels; lubricants; hydraulic and insulating oils; preservatives; liquid and compressed gases; bulk chemical products; coolants; deicing and antifreeze compounds, together with components and additives of such products; and coal.	A—Air. H—Bulk petroleum. V—Packaged bulk fuels. J—Packaged petroleum. W—Ground (solid fuels, such as coal and coke).
5	IV—Construction: construction materials, to include installed equipment and all fortification/barrier materials.	----------
6	V—Ammunition: ammunition of all types (including CBR and special weapons), bombs, explosives, mines, fuzes, detonators, pyrotechnics, missiles, rockets, propellants, and other associated items.	A—Air. W—Conventional munitions. N—Special weapons. Y—Biological munitions. Z—Chemical toxic munitions.
7	VI—Personal-demand items (nonmilitary sales items).	----------
8	VII—Major end items: a final combination of end products that are ready for their intended use, e.g., tanks, launchers, mobile machine shops, and vehicles.	A—Air. B—Ground support materiel. [3] D—General-purpose administrative vehicles. G—Communications-electronics. K—Tactical vehicles. L—Missiles.

See footnotes at end of table.

Table 5-1. Ten Classes of Supply—Continued

1	1 Major classification	2 Subclassification [1]
		M—Weapons. N—Special weapons. Q—General equipment. P—U.S. Army Security Agency materiel. U—Communications security materiel. Z—Chemical.
9	VIII—Medical materiel, including medical-peculiar repair parts.	
10	IX—Repair parts (less medical-peculiar repair parts): all repair parts and components, to include kits, assemblies, and subassemblies, reparable and nonreparable, required for maintenance support of all equipment.	A—Air. B—Ground support materiel. [3] D—General-purpose vehicles. E—General supply items. F—Clothing and textiles. G—Communications-electronics. K—Tactical vehicles. L—Missiles. M—Weapons. N—Special weapons. Q—General equipment. P—U.S. Army Security Agency materiel. U—Communications security materiel. T—Industrial supplies. [4] Z—Chemical (repair parts for classes II and VIIZ).
11	X—Materiel to support nonmilitary programs, e.g., agricultural and economic development not included in classes I through IX.	

[1] The ALPHA code for subclassification of classes II, VII, and IX represents materiel category designators used in supply management, with the exception of A (Air), which is used throughout all classes of supply as applicable. ALPHA codes not used as materiel category designators have been assigned to the subclassifications for classes I, III, and V. The subclassification materiel designators (A through Z) may be used in combination with the designated subclassifications, when appropriate and if desired, to definitize further a portion of a class of supply for planning purposes, e.g., use of class V AL to designate ammunition, air missile. Additional codes may be used by the Services to satisfy a specific requirement, e.g., to designate reparable or nonreparable, high-dollar items, or for other selective management purposes. This additional permissive coding is not to be used in lieu of that designated for the major classification and subclassifications.

[2] Includes gratuitous health and welfare items.

[3] Includes power generators and construction, barrier, bridging, firefighting, petroleum, and mapping equipment.

[4] Includes bearings, block and tackle, cable, chain, wire rope, screws, belts, studs, steel rods, plates, and bars.

Table 5-2. Characteristics of Standard Rations

1	Item	Number of units per case	Gross weight per case (lb)	Volume per case (cu ft)	Average weight per unit including packing (lb)	Average calories per unit	Remarks
1		2	3	4	5	6	7
2	Field ration A	[a]	[a]	[a]	6.0	4,600 per ration.	This basic field ration consists of such perishables as fresh and frozen meats, vegetables, and fruits. Its primary use is for stable conditions and static phases of military operations when normal cooking and refrigeration facilities are available. It should be issued in preference to any other type of ration whenever it is available and circumstances permit its use.
3	Standard B ration for Armed Forces.	[b]	[b]	[b]	6.0	4,400 per ration.	Same as the field ration, with nonperishables substituted for perishables. Designed for use where refirigeration facilites are lacking or impracticable but where kitchen and cooking facilities are available. (See SB 10-495.)
4	Meal, combat, individual	12 meals	25	0.83	1.63	1,200 per meal.	Designed for use as individual meal packets or in multiples of three for a complete ration. Not to be used over extended periods.
5	Food packet, long-range patrol	24	29	0.87	0.69	1,000+ per packet.	Issued to troops under combat conditions where resupply may be uncertain for as long as 10 days. Because the packet is designed for individual use, it is suitable for tactical messing, which requires dispersion. Water, preferably hot, is required to reconstitute the dehydrated components of the packet. Eight different menus are available. This packet has been classified as limited-production type.
6	Food packet, survival, general-purpose.	24 packets	20	0.43	0.75	880 per packet.	Contains four food bars, sugar, instant coffee, and soup and gravy bases packed in a rectangular can with a key opener taped thereto. Minimal recommended issue is one-half packet per man per day in hot climates and one packet per man per day in cold climates.
7	Ration, trail, frigid, individual	8 rations	34	1.28	4.0	4,400 per ration.	Designed for use in extremely cold climates by small patrols or trail teams for short periods (1-3 days) when resupply is impossible.
8	Ration supplement, sundries pack (one pack per 100 men).	1	47	1.75			Composed of items necessary to the health and comfort of troops, e.g., essential toilet articles, tobacco, and confections that normally are obtained at an exchange. Made available in theaters of operations for issue pending establishment of adequate service facilities.
9	Ration supplement, aid station (makes 100 8-oz drinks).	1	16	1.01			Designed for use at forward medical aid stations to provide combat casualties with hot, stimulating beverages, which alleviate shock and contribute to patient comfort.

[a] Warehouse storage space per 100 rations (based on 8-ft stack height and including allowances for aisles) is 22 cu ft refrigerated storage, 45 cu ft covered storage, and 33 cu ft open storage.
[b] Warehouse storage space per 100 rations (based on 8-ft stack height and including allowances for aisles) is 26 cu ft covered storage and 40 cu ft open storage.

Table 5-3. Time Elements in Class I Supply

1	1 Work	2 Daylight (min)	3 Dark (min)
2	Unloading of rations for one division at class I distribution point and preparing to distribute to battalions or units of similar size.	120	150
3	Distribution of class I supplies to battalion or unit of similar size by higher echelon at one distributior point	30	30
4	Distribution of class I supplies to separate battalion or unit of similar size by higher echelon	15	15
5	Preparation of 1 day's class I supplies for issue at battalion class I distribution point	30	60
6	Physical distribution by battalion of 1 day's class I supplies (transfer of loads) to kitchen	15	20
7	Unloading of kitchen equipment from trucks, setting up, and being prepared to begin cooking (or vice versa)	20	20
8	Breakdown of subsistence into three meals at kitchen (breakdown accomplished by mess personnel)	15	20
9	Personnel to prepare, cook, and be ready to serve a hot meal, starting with a hot kitchen	120	150
10	Kitchens to prepare a cold noon meal	60	90
11	Serving a hot meal to troops from a kitchen truck with majority of men being served at the truck	45	60
12	Serving a hot meal to troops by carrying parties (when kitchen is located within a 900-meter radius of company).	90	120

Table 5-4. Army Aircraft—POL Data

1	1 LIN	2 Nomenclature	3 Type	4 Fuel: Internal fuel capacity (gal)	5 Fuel: Consumption per cruise hour (gal)	6 Engine oil: Type	7 Engine oil: Consumption per 100 hours (gal)
2	A30111	AIRPLANE OBSERVATION+ 0-1D	AVGAS	42	9.00	II	7.20
3	A30221	AIRPLANE OBSERVATION STOL+ OV-1B	JET	297	126.62	TURBINE	1.00
4	A30271	AIRPLANE OBSERVATION STOL+ OV-1C	JET	297	126.80	TURBINE	1.00
5	A30457	AIRPLANE RECONNAISSANCE UTILITY+ RU-6A	AVGAS	138	19.50	II	17.50
6	A30465	AIRPLANE RECONNAISSANCE UTILITY+ RU-8D	AVGAS	230	31.43	II	30.00
7	A30621	AIRPLANE UTILITY+ U-1A	AVGAS	213	31.00	II	18.00
8	A30671	AIRPLANE UTILITY+ U-6A	AVGAS	138	19.50	II	17.50
9	A30721	AIRPLANE UTILITY+ U-8D	AVGAS	230	31.43	II	27.00
10	A30821	AIRPLANE UTILITY+ U-8F	AVGAS	230	30.00	II	30.00
11	A30971	AIRPLANE UTILITY STOL+ U-10A	AVGAS	60	17.00	II	11.00
12	K30254	HELICOPTER CARGO TRANSPORT+ CH-34C	AVGAS	262	97.00	II	129.00
13	K30291	HELICOPTER CARGO TRANSPORT+ CH-37B	AVGAS	410	166.37	TURBINE	143.00
14	K30378	HELICOPTER CARGO TRANSPORT+ CH-47A	JET	630	350.00	TURBINE	143.00
15	K30645	HELICOPTER OBSERVATION+ OH-6A	JET	62	29.00	TURBINE	0.10
16	K30682	HELICOPTER OBSERVATION+ OH-13E	AVGAS	29	13.70	II	1.30
17	K30702	HELICOPTER OBSERVATION+ OH-13G	AVGAS	42	13.70	II	7.00
18	K30746	HELICOPTER OBSERVATION+ OH-13S	AVGAS	42	15.50	II	7.00
19	K30917	HELICOPTER OBSERVATION+ OH-23D	AVGAS	48	16.10	II	12.00
20	K30961	HELICOPTER OBSERVATION+ OH-23G	AVGAS	46	19.00	II	12.00
21	K31749	HELICOPTER UTILITY+ UH-1B	JET	165	60.55	TURBINE	4.00
22	K31786	HELICOPTER UTILITY+ UH-1D	JET	224	63.20	TURBINE	4.00

Table 5-5. Vehicles and Vehicular Equipment—POL Data

1	1	2	3	4	5	6	7	8
1	LIN	Nomenclature	Type of fuel	Fuel tank capacity (gal)	Fuel consumption (gal per km)	Oil consumption (gal per 100 km)	Gear lube (lb per 100 km)	Greases (lb per 100 km)
2	D10725	CARRIER 81 MILLIMETER MORTAR+ FULL TRACKED (LESS MORTAR).	Diesel	137	0.24	1.30	1.30	NA
3	D10740	CARRIER 107 MILLIMETER MORTAR+ SELF PROPELLED (LESS MORTAR).	MOGAS	137	1.64	1.30	1.30	NA
4	D10990	CARRIER CARGO AMPHIBIOUS+ TRACKED..	MOGAS	65	0.20	NA	NA	NA
5	D11048	CARRIER CARGO+ TRACKED 6 TON.....	Diesel	105	1.64	NA	NA	NA
6	D11401	CARRIER COMMAND AND RECONNAISSANCE + ARMORED.	MOGAS	110	0.49	NA	NA	NA
7	D11538	CARRIER COMMAND POST+ LIGHT TRACKED.	MOGAS	120	1.64	NA	NA	NA
8	D11620	CARRIER FLAME THROWER+.....	MOGAS	85	0.25	NA	NA	NA
9	D12086	CARRIER PERSONNEL FULL TRACKED+ ARMORED.	MOGAS	80	1.63	NA	NA	NA
10	E56577	COMBAT ENGINEER VEHICLE FULL TRACKED+	Diesel	375	2.18	NA	NA	NA
11	E57030	COMBAT VEHICLE MECHANIZED INFANTRY+.	Diesel	375	2.00	NA	NA	NA
12	J96694	GUN ANTIAIRCRAFT ARTILLERY SELF-PROPELLED+ 20MM.	MOGAS	155	0.98	NA	NA	NA
13	J96819	GUN ANTIAIRCRAFT ARTILLERY SELF PROPELLED+ 40 MILLIMETER.	MOGAS	144	1.96	NA	NA	NA
14	J96956	GUN ANTITANK SELF PROPELLED+ 90MM....	MOGAS	155	0.98	NA	NA	NA
15	J97093	GUN FIELD ARTILLERY SELF PROPELLED+ 155MM.	MOGAS	135	2.00	NA	NA	NA
16	J97230	GUN FIELD ARTILLERY SELF PROPELLED+ 175MM.	Diesel	300	2.03	NA	NA	NA
17	K56981	HOWITZER HEAVY SELF PROPELLED+ 8 INCH.	MOGAS	300	2.42	2.50	1.80	1.10
18	K57255	HOWITZER LIGHT SELF PROPELLED+ 105MM	Diesel	135	1.92	2.40	1.60	0.90
19	K57666	HOWITZER MEDIUM SELF PROPELLED+ 155MM.	MOGAS	135	2.00	2.40	1.60	0.90
20	R50543	RECOVERY VEHICLE FULL TRACKED+ LIGHT ARMORED.	Diesel	320	1.89	NA	NA	NA
21	R50680	RECOVERY VEHICLE FULL TRACKED+ MEDIUM.	MOGAS	445	2.79	NA	NA	NA
22	R50817	RECOVERY VEHICLE FULL TRACKED+ HEAVY.	MOGAS	400	1.62	NA	NA	NA
23	V12826	TANK COMBAT FULL TRACKED+ 76MM GUN.	MOGAS	140	0.49	2.30	0.09	0.90
24	V12963	TANK COMBAT FULL TRACKED+ 90MM GUN.	MOGAS	335	0.51	NA	NA	NA
25	V13100	TANK COMBAT FULL TRACKED+ 105MM GUN.	Diesel	375	1.61	NA	NA	NA
26	V13374	TANK COMBAT FULL TRACKED+ FLAME THROWER.	Diesel	335	0.51	NA	NA	NA
27	X38639	TRUCK AMBULANCE+ 1/4-TON 4×4 W/E.....	MOGAS	20	0.03	0.20	0.10	0.10
28	X38913	TRUCK AMBULANCE+ 3/4-TON 4×4 W/WINCH W/E.	MOGAS	24	0.06	0.10	0.20	0.20
29	X38951	TRUCK AMBULANCE+ 1-1/4-TON 4×4 W/E....	MOGAS	24	0.07	0.12	0.20	0.20
30	X38961	TRUCK AMBULANCE+ 1-1/4-TON 6×6 W/E....	Diesel	24	0.06	0.10	0.20	0.20
31	X39050	TRUCK BOLSTER+ 2-1/2-TON 6×6 W/WINCH W/E.	MOGAS	50	0.09	0.20	0.50	0.30
32	X39187	TRUCK BOLSTER+ 5-TON 6×6 W/WINCH W/E.	MOGAS	78	0.22	0.50	0.30	0.30
33	X39392	TRUCK CAMERA MAP REPRODUCTION+ 2-1/2-TON.	MOGAS	50	0.15	0.30	0.50	0.50
34	X39872	TRUCK CARGO+ 3/4-TON 4×4 W/WINCH W/E.	MOGAS	24	0.06	0.10	0.10	0.20
35	X39906	TRUCK CARGO+ 1-1/4-TON 4×4 W/WINCH W/E	MOGAS	24	0.07	0.12	0.20	0.20
36	X39940	TRUCK CARGO+ 1-1/4-TON 6×6 W/E.....	MOGAS	24	0.07	0.12	0.20	0.20
37	X40009	TRUCK CARGO+ 2-1/2-TON 6×6 W/E.....	MOGAS	50	0.15	0.30	0.30	0.50
38	X40214	TRUCK CARGO+ DROP SIDE 2-1/2-TON 6×6 W/WINCH W/E.	MOGAS	50	0.15	0.30	0.50	0.50

Table 5-5. Vehicles and Vehicular Equipment—POL Data—Continued

1	1 LIN	2 Nomenclature	3 Type of fuel	4 Fuel tank capacity (gal)	5 Fuel consumption (gal per km)	6 Oil consumption (gal per 100 km)	7 Gear lube (lb per 100 km)	8 Greases (lb per 100 km)
39	X40420	TRUCK CARGO+ 2-1/2-TON 6×6 XLWB W/ WINCH W/E.	MOGAS	50	0.13	0.26	0.50	0.50
40	X40831	TRUCK CARGO+ 5-TON 6×6 LWB W/E	MOGAS	78	0.22	0.50	0.30	0.30
41	X40931	TRUCK CARGO+ DROP SIDE 5-TON 6×6 W/ WINCH W/E.	MOGAS	78	0.22	0.50	0.30	0.30
42	X40968	TRUCK CARGO+ 5-TON 6×6 LWB W/WINCH W/E.	MOGAS	78	0.22	0.50	0.30	0.30
43	X41105	TRUCK CARGO+ 5-TON 6×6 XLWB W/E	MOGAS	78	0.22	0.50	0.30	0.30
44	X41242	TRUCK CARGO+ 5-TON 6×6 XLWB W/WINCH W/E.	MOGAS	78	0.22	0.50	0.30	0.30
45	X41310	TRUCK CARGO+ 5-TON 8×8 W/E	MOGAS	110	0.22	0.40	0.50	0.60
46	X41327	TRUCK CARGO+ 5-TON 8×8 W/WINCH W/E	MOGAS	110	0.22	0.40	0.50	0.60
47	X41653	TRUCK CARGO+ 8-TON 4×4 W/E	MOGAS	220	0.20	0.50	0.30	0.30
48	X42886	TRUCK CONTACT MAINTENANCE+ 3/4-TON	MOGAS	24	0.07	0.10	0.20	0.20
49	X43238	TRUCK DUMP+ 3/4-TON 4×4 W/WINCH W/E	MOGAS	25	0.06	0.10	0.20	0.20
50	X43434	TRUCK DUMP+ 2-1/2-TON 6×6 W/WINCH W/E	MOGAS	50	0.13	0.30	0.30	0.50
51	X43845	TRUCK DUMP+ 5-TON 6×6 W/WINCH W/E	MOGAS	110	0.22	NA	NA	NA
52	X48815	TRUCK LABORATORY MAP REPRODUCTION+ 2-1/2-TON.	MOGAS	50	0.13	0.30	0.30	0.50
53	X53709	TRUCK MAINTENANCE+ TELEPHONE 3/4-TON 4×4 W/WINCH W/E.	MOGAS	24	0.06	0.10	0.20	0.20
54	X53775	TRUCK MAINTENANCE+ TELEPHONE 1-1/4-TON 4×4 W/WINCH W/E.	MOGAS	28	0.07	NA	NA	NA
55	X53846	TRUCK MAINTENANCE+ TELEPHONE CONSTRUCTION 2-1/2-TON 6×6 W/WN W/E.	MOGAS	50	0.13	0.30	0.30	0.50
56	X53983	TRUCK MAINTENANCE+ EARTH BORER POLE SETTER 2-1/2-T 6×6 W/WN W/E.	MOGAS	50	0.13	0.30	0.30	0.50
57	X54219	TRUCK MAP LAYOUT MAP REPRODUCTION+ 2-1/2-TON.	MOGAS	50	0.13	0.30	0.30	0.50
58	X54257	TRUCK MAP REPRODUCTION+ 2-1/2-TON	MOGAS	50	0.13	0.30	0.30	0.50
59	X54394	TRUCK MAP REPRODUCTION+ 2-1/2-TON W/ DARK ROOM EXT.	MOGAS	50	0.13	0.30	0.30	0.50
60	X55079	TRUCK PHOTOGRAPHIC MAP REPRODUCTION+ 2-1/2-TON.	MOGAS	50	0.13	0.30	0.30	0.50
61	X55216	TRUCK MAINTENANCE+ PIPELINE CONSTRUCTION 2-1/2-TON 6×6 W/WN W/E.	MOGAS	50	0.13	0.30	0.30	0.50
62	X55253	TRUCK PLATE GRAINER MAP REPRODUCTION+ 2-1/2-TON.	MOGAS	50	0.13	0.30	0.30	0.50
63	X55287	TRUCK PLATE PROCESS MAP REPRODUCTION+ 2-1/2-TON.	MOGAS	50	0.13	0.30	0.30	0.50
64	X55627	TRUCK PLATFORM UTILITY+ 1/2-TON 4×4 W/E.	MOGAS	80	0.04	0.10	0.40	0.40
65	X55696	TRUCK PRESS MAP REPRODUCTION+ 2-1/2-TON.	MOGAS	50	0.13	0.50	0.30	0.50
66	X56586	TRUCK STAKE+ 5-TON 6×6 W/WINCH W/E	MOGAS	78	0.15	0.50	0.30	0.30
67	X57271	TRUCK TANK+ FUEL SERVICING 2-1/2-TON 6×6 W/E.	MOGAS	50	0.13	0.30	0.30	0.50
68	X57408	TRUCK TANK+ FUEL SERVICING 2-1/2-TON 6×6 W/WINCH W/E.	MOGAS	50	0.13	0.30	0.30	0.50
69	X58093	TRUCK TANK+ FUEL SERVICING 2500 GALLON 4×4 W/E.	MOGAS	24	0.06	0.10	0.20	0.20
70	X58367	TRUCK TANK+ WATER 1000 GALLON 2-1/2-TON 6×6 W/E.	MOGAS	50	0.13	0.30	0.30	0.50
71	X59189	TRUCK TRACTOR+ 2-1/2-TON 6×6 W/WINCH W/E.	MOGAS	50	0.13	0.30	0.30	0.50
72	X59463	TRUCK TRACTOR+ 5-TON 6×6 W/WINCH W/E	MOGAS	110	0.22	0.40	0.50	0.60
73	X59505	TRUCK TRACTOR+ 5-TON 8×8 W/WINCH W/E	MOGAS	110	0.22	0.40	0.50	0.60

Table 5-5. Vehicles and Vehicular Equipment—POL Data—Continued

1	1 LIN	2 Nomenclature	3 Type of fuel	4 Fuel tank capacity (gal)	5 Fuel consumption (gal per km)	6 Oil consumption (gal per 100 km)	7 Gear lube (lb per 100 km)	8 Greases (lb per 100 km)
74	X59737	TRUCK TRACTOR+ 10T 6×6 W/DUAL MIDSHIP WN W/LOW MTD 5TH WHEEL W/E.	MOGAS	166	0.34	0.40	0.50	0.40
75	X60696	TRUCK TRACTOR WRECKER+ 5-TON 6×6 W/WINCH W/E.	MOGAS	78	0.22	0.30	0.30	0.50
76	X60970	TRUCK UTILITY+ 1/4-TON 4×4 W/WINCH W/E	MOGAS	17	0.03	0.10	0.10	0.10
77	X61244	TRUCK UTILITY+ 1/4-TON 4×4 CARRIER FOR 106 MM RIFLE W/E.	MOGAS	20	0.03	0.20	0.10	0.10
78	X62066	TRUCK VAN+ EXPANSIBLE 2-1/2-TON 6×6 W/WINCH W/E.	MOGAS	20	0.13	0.30	0.30	0.50
79	X62203	TRUCK VAN+ EXPANSIBLE 2-1/2-TON 6×6 W/HYDRAULIC LIFT GATE W/E.	MOGAS	20	0.13	0.30	0.30	0.50
80	X62271	TRUCK VAN+ EXPANSIBLE 5-TON 6×6 W/ HYDRAULIC LIFT GATE W/E.	MOGAS	110	0.22	0.40	0.50	0.60
81	X62477	TRUCK VAN+ SHOP 2-1/2-TON 6×6 W/WINCH W/E.	MOGAS	50	0.14	0.30	0.30	0.60
82	X63025	TRUCK WRECKER+ CRANE 2-1/2-TON 6×6 W/WINCH W/E.	MOGAS	50	0.13	0.30	0.30	0.60
83	X63094	TRUCK WRECKER+ 3/4-TON 4×4 W/E	MOGAS	24	0.06	0.10	0.20	0.20
84	X63162	TRUCK WRECKER+ 2-1/2-TON 6×6 W/WINCH W/E.	MOGAS	50	0.13	0.20	0.30	0.50
85	X63299	TRUCK WRECKER+ 5-TON 6×6 W/WINCH W/E	MOGAS	78	0.22	0.50	0.30	0.30
86	X63436	TRUCK WRECKER+ 10-TON 4×4 W/E	MOGAS	166	0.63	0.60	0.60	0.50

Table 5-6. Construction Equipment—Fuel Data

1	1 LIN	2 Nomenclature	3 Type of fuel	4 Consumption (gph)
2	B01756	AUGER EARTH SKID MOUNTED+ GAS DRIVEN 9 FT BORE DEPTH	MOGAS	3.00
3	E68146	COMP RCP PWR DRVN+ AIR FRAME GAS 15CFM 100 PSI-JOHNSON MDL 252R	MOGAS	0.33
4	E69105	COMP RCP PWR DRVN+ AIR REC GAS DRVN 5 CFM 175 PSI	MOGAS	0.33
5	E69242	COMP RCP PWR DRVN+ AIR REC GAS DRVN 15 CFM 175 PSI	MOGAS	0.62
6	E69790	COMP RCP PWR DRVN+ AIR SKD GAS DRVN 55CFM 100PSI FOR DIV PUR	MOGAS	1.54
7	E70064	COMP RCP PWR DRVN+ TRK 2 WHL PNEU TIRES GAS DRVN 5 CFM 175 PSI	MOGAS	0.29
8	E70201	COMP RCP PWR DRVN+ TRK 2 WHL PNEU TIRES GAS DRVN 8 CFM 175 PSI	MOGAS	0.39
9	E70338	COMP RCP PWR DRVN+ TRLR 2 WHL PNEU TIRES GAS 15 CFM 175 PSI	MOGAS	0.70
10	E70886	COMP RCP PWR DRVN+ AIR WHL GAS DRVN 15 CFM 3500 PSI WTRZD	MOGAS	1.27
11	E71434	COMP RCP PWR DRVN+ AIR TRK GAS DRVN WRTZD 80 CFM 5000 PSI	MOGAS	12.00
12	E72393	COMP RTY PWR DRVN+ AIR SKD GAS DRVN 125 CFM 100 PSI	MOGAS	3.22
13	E72667	COMP RTY PWR DRVN+ AIR TRLR GAS DRVN 210 CFM 100 PSI	MOGAS	5.25
14	E72804	COMP RTY PWR DRVN+ AIR TRLR DSL DRVN 250 CFM 100 PSI	Diesel	5.75
15	E73352	COMP RTY PWR DRVN+ AIR WHL MTD DSL DRVN 600 CFM 100 PSI	Diesel	7.00
16	E73489	COMP RTY PWR DRVN+ AIR TRK GAS 210 CFM 100 PSI	Diesel	5.25
17	E73626	COMP RTY PWR DRVN+ AIR WHBRW FR 2 PNU TIRE GAS DRV 60 CFM 6.5 PSI.	MOGAS	0.63
18	F39241	CRANE WHEEL MTD+ 5 TON 3/8 CU YD DSL 4×4 ROUGH TERRN AIR TRANSPT.	Diesel	3.50
19	F39378	CRANE WHEEL MTD+ 20 TON 3/4 CU YD ROUGH TERRAIN	Diesel	3.50
20	F39515	CRANE-SHOVEL BASIC UNIT CRWLR MTD+ 10 TON 3/4 CU YD	MOGAS	4.20
21	F40474	CRANE-SHOVEL BASIC UNIT CRWLR MTD+ 40 TON 2 CU YD	Diesel	8.50
22	F40611	CRANE-SHOVEL BASIC UNIT CRWLR MTD+ 40 TON 2 CU YD	Diesel	8.20
23	F43077	CRANE WHL MTD+ 7 TON W/BOOM CRANE 24 FT W/BLK TKLE 9 FT	MOGAS	2.75
24	F43414	CRANE-SHOVEL TRK MID+ 20T 3/4 CU YD W/BLK TKLE 20T BC 30FT	MOGAS	4.20

Table 5-6. Construction Equipment—Fuel Data—Continued

1	1 LIN	2 Nomenclature	3 Type of fuel	4 Consumption (gph)
25	F49399	CRUSH AND SCREEN PLANT+ DSL AND ELEC DRVN WHL MTD 75 TPH (ARMY).	Diesel	7.40
26	F50995	CRUSHER JAW+ GAS DRVN WHEEL MTD 15 TPH	MOGAS	4.80
27	G27664	DISTRIBUTOR BITUMINOUS MATERIAL TANK TYPE+ GAS DRVN TRK MTD 800G.	MOGAS	0.31
28	G29945	DITCHING MACHINE+ DSL DRVN WHL MTD LADDER	Diesel	4.50
29	G55186	DRIER-MIXER BITUM-CONCRETE MTRL WHL MTD+ GAS DRVN 3 TON PER HR.	MOGAS	2.50
30	G58563	DRILL MACH WELL PERCUSS SKID MTD+ GAS 6 IN DIA HOLE AT 1000 FT	MOGAS	2.75
31	J74715	GRADER ROAD MOTORIZED+ DSL DRVN AIR TRANSPTBL 6X4	Diesel	4.60
32	J74852	GRADER ROAD MOTORIZED+ DSL DRVN HVY 6X4 FRONT-WHL STEER	Diesel	5.75
33	K04560	HAMMER PILE DRIVER DROP+ 3000 LB	Diesel	1.50
34	K04697	HAMMER PILE DRIVER SELF-POWERED+ DSL DRVN 7000 LB MAX WEIGHT	Diesel	2.50
35	K04834	HAMMER PILE DRIVER SELF-POWERED+ DSL DRVN 12000 LB MAX WEIGHT	Diesel	7.30
36	L21300	KETTLE HEATING BITUMEN+ GAS DRVN SKID MTD 750 GAL	MOGAS	2.75
37	L21437	KETTLE HEATING BITUMEN+ GAS DRVN TRLR MTD 165 GAL	MOGAS	1.25
38	L76351	LOADER SCOOP TYPE+ DSL DRVN 4 WHLS 1-1/2 CU YD	Diesel	4.00
39	L76488	LOADER SCOOP TYPE+ DSL DRVN 4 WHLS 2-1/2 CU YD	Diesel	5.90
40	L76625	LOADER SCOOP TYPE+ DSL 4 WHLS 2-1/2 CU YD W/MULTI SEGMENT BUCKET.	Diesel	5.90
41	M54151	MIXER CONCRETE TRAILER MOUNTED+ GAS DRVN 16 CU FT	MOGAS	1.35
42	M55384	MIXER ROTARY TILLER+ DSL DRVN SELF PROPEL	Diesel	2.75
43	N75124	PAVING MACHINE BITUMIOUS MATERIAL+ GAS DRVN CRWLR MTD 12 FT RN.	MOGAS	2.75
44	N91371	PILE DRIVING RIG+ SKID MTD 65 FT LG	MOGAS	4.50
45	S11068	ROLLER MOTORIZED+ GAS DRIVEN TANDEM 2 ROLLS 5 TO 8 TON	MOGAS	2.75
46	S11479	ROLLER MOTORIZED+ GAS DRVN 10 TON 3 WHL W/SCARIF AND SPRINK	MOGAS	3.75
47	S11616	ROLLER MOTORIZED+ GAS 3 WHL 10 TON W/SPRINK	MOGAS	3.75
48	W77090	TRACTOR FULL TRCKD LOW SPD+ DSL HVY DBP	Diesel	7.80
49	W77364	TRACTOR FULL TRCKD LOW SPD+ DSL HVY DBP W/BULDOZ SCARIF	Diesel	8.20
50	W80515	TRACTOR FULL TRCKD LOW SPD+ DSL LIGHT DBP W/BULDZ SCARIF PCU HYD.	Diesel	4.30
51	W80789	TRACTOR FULL TRCKD LOW SPD+ DSL MED W/ANGLEDOZ SCARIF	Diesel	9.70
52	W83255	TRACTOR FULL TRCKD LOW SPD+ DSL MED DBP W/ANGLEDOZ SCARIF WINCH.	Diesel	9.70
53	W83529	TRACTOR FULL TRCKD LOW SPD+ DSL MED DBP W/BULDOZ W/SCARIF RIPPER.	Diesel	11.80
54	W86063	TRACTOR FULL TRCKD LOW SPD+ MED DBP W/HYD SCRAPER CONTROLS	Diesel	9.70

Table 5-7. Generators—Fuel Data

1	1 LIN	2 Nomenclature	3 Type of fuel	4 Consumption (gph)
2	J35424	GEN ST DSL ENG TM+ 15KW 60CY 3PH AC 120/208 240/416V PU-402/M	Diesel	3.50
3	J35561	GEN ST DSL ENG TM+ 45KW 60CY 3PH AC 120/208 240/416V PU-407/M	Diesel	5.00
4	J35698	GEN ST DSL ENG TRK MTD+ 45KW 60CY 3PH AC 120/208 240/416V PU408M	Diesel	5.00
5	J35835	GEN ST DSL ENG+ 15KW 60CY 3PH AC 120/208 240/416V SKID	Diesel	3.50
6	J35913	GEN ST DSL ENG+ 15KW 60CY 1PH 120/240V 12.5KW 50CY 240/416V SKID	Diesel	3.50
7	J36109	GEN ST DSL ENG+ 30KW 60CY 3PH AC 120/208 240/416V 50CY SKID	Diesel	4.20
8	J36246	GEN ST DSL ENG+ 30KW 60 CY 3PH AC 120/208 240/416 V TO 25KW 50CY	Diesel	4.20
9	J36383	GEN ST DSL ENG TM+ 30KW 60CY 3PH AC 120/208 240/416 50CY PU-406	Diesel	4.20
10	J36931	GEN ST DSL ENG+ 45KW 60CY 3PH AC 120/208 240/416V 50CY PR PWR	Diesel	5.00

Table 5-7. Generators—Fuel Data—Continued

1	1 LIN	2 Nomenclature	3 Type of fuel	4 Consumption (gph)
11	J37205	GEN ST DSL ENG TM+ 45KW 60CY 3PH AC 120/208 240/416V PU-551/M	Diesel	5.00
12	J37342	GEN ST DSL ENG+ 45 KW 400 CY 3PH AC 120/208 240/416V SKID	Diesel	5.00
13	J37753	GEN ST DSL ENG+ 60KW 60CY 3PH AC 120/208 240/416V 50CY SKID	Diesel	6.00
14	J38301	GEN ST DSL ENG+ 60KW 60CY 3PH AC 120/208 240/416 50CY SKID	Diesel	6.00
15	J38712	GEN ST DSL ENG+ 100KW 60CY 3PH AC 120/208 240/416V 50CY SKID	Diesel	8.00
16	J38986	GEN ST DSL ENG+ 100KW AC 120/208 240/416V 3PH 50CY SKID PR PWR	Diesel	8.00
17	J40219	GEN ST DSL ENG+ 300KW 60CY 3PH AC 2400/4160V 50CY BASE	Diesel	16.00
18	J40767	GENERATOR SET GASOLINE ENGINE TRAILER MTD+ PU-236/G	MOGAS	1.40
19	J40904	GENERATOR SET GASOLINE ENGINE TRAILER MTD+ PU-248U	MOGAS	2.40
20	J41041	GENERATOR SET GASOLINE ENGINE TRAILER MTD+ PU-253/U	MOGAS	2.40
21	J41109	GENERATOR SET GASOLINE ENGINE TRAILER MTD+ PU-269	MOGAS	2.40
22	J41178	GENERATOR SET GASOLINE ENGINE TRAILER MTD+ PU-290/MR	MOGAS	2.40
23	J41315	GENERATOR SET GASOLINE ENGINE TRAILER MTD+ PU-294/G	MOGAS	1.40
24	J41452	GENERATOR SET GASOLINE ENGINE TRAILER MTD+ PU-304 MPQ-4A	MOGAS	2.40
25	J41589	GENERATOR SET GASOLINE ENGINE TRAILER MTD+ PU-322/G	MOGAS	0.74
26	J41786	GENERATOR SET GASOLINE ENGINE TRAILER MTD+ PU-332/U	MOGAS	2.40
27	J41819	GENERATOR SET GASOLINE ENGINE TRAILER MTD+ PU-375A/G	MOGAS	2.40
28	J41863	GENERATOR SET GASOLINE ENGINE TRAILER MTD+ PU-378/G	MOGAS	2.40
29	J41931	GENERATOR SET GASOLINE ENGINE TRAILER MTD+ PU-456/G	MOGAS	1.40
30	J42000	GENERATOR SET GASOLINE ENGINE TRAILER MTD+ PU-474/U	MOGAS	2.40
31	J42100	GEN ST GAS ENG TM+ 10KW 60CY 1PH AC 120/240V PU-619/M	MOGAS	2.40
32	J42274	GEN ST GAS ENG+ 0.15KW 60CY 1PH AC 120V SKID	MOGAS	0.15
33	J42411	GEN ST GAS ENG+ 0.15KW DC 7V AND 550V SKID SHOCK MTD PE-162	MOGAS	0.15
34	J42548	GEN ST GAS ENG+ 0.3KW 60CY 1PH AC 120/240V SHOCK MTD PE-214BCD	MOGAS	0.20
35	J42685	GEN ST GAS ENG+ 0.3KW AC 115V 1PH 400CY DC 24 TO 35V	MOGAS	0.20
36	J42822	GEN ST GAS ENG+ 0.4KW AC 1PH 400CY 115V 0.08KW DC 28V SHK PU422U	MOGAS	0.21
37	J42840	GEN ST GAS ENG+ 0.45KW 15 V DC SKID-SHOCK PE 210	MOGAS	0.21
38	J42959	GEN ST GAS ENG+ 0.5KW 60CY 1PH AC 120V SHK	MOGAS	0.25
39	J43096	GEN ST GAS ENG+ 0.5KW 400CY 1 AND 3PH AC 120 120/240 120/208 V	MOGAS	0.25
40	J43233	GEN ST GAS ENG+ 0.5KW 2 WIRE DC 28V SHK	MOGAS	0.25
41	J43918	GEN ST GAS ENG+ 1.5KW 60CY 1PH 2 WIRE AC 120V SHOCK	MOGAS	0.60
42	J44055	GEN ST GAS ENG+ 1.5KW DC 28V SHOCK	MOGAS	0.60
43	J44329	GEN ST GAS ENG+ 2KW DC 12V SHK	MOGAS	0.70
44	J45288	GEN ST GAS ENG+ 2.5KW 60CY 1PH AC 120V SKID SHOCK MTD PE-75-AF	MOGAS	0.74
45	J45699	GEN ST GAS ENG+ 3KW 60CY 1-3PH 120/240V 120/208V SKID SHOCK	MOGAS	0.84
46	J45836	GEN ST GAS ENG+ 3KW 400CY 1-3PH AC 120/208 240 SKD MTD	MOGAS	0.84
47	J46110	GEN ST GAS ENG+ 3 KW DC 28V SKID-SHK	MOGAS	0.84
48	J46384	GEN ST GAS ENG TM+ 3KW 60CY 1-3PH AC 120 240 120/208V PU-617/M	MOGAS	0.84
49	J46795	GEN ST GAS ENG+ 5 KW 60 CY 1 PH AC 120 V BASE MTD PU-286	MOGAS	1.40
50	J47068	GEN ST GAS ENG+ 5KW 60CY 1-3PH AC 120 240 120/208V SKD-SHK MTD	MOGAS	1.40
51	J47480	GEN ST GAS ENG TM+ 5KW 60CY 1-3PH AC 120 240 120/208V PU-618/M	MOGAS	1.40
52	J47617	GEN ST GAS ENG TM+ 5KW 60CY 1-3PH AC 120/240 120/208V PU-620M	MOGAS	1.40
53	J47891	GEN ST GAS ENG+ 5KW 60CY 1 AND 3PH AC 120 120/240 120/208V SKID	MOGAS	1.40
54	J48302	GEN ST GAS ENG+ 5KW 60CY 1PH AC 120V SKID MTD PE-197A	MOGAS	1.40
55	J48713	GEN ST GAS ENG+ 5KW 400CY 1-3PH AC 120 120/240 120/208V SKID	MOGAS	1.50
56	J49055	GEN ST GAS ENG+ 7.5 KW DC 28.5 V WHL MTD	MOGAS	1.50
57	J49261	GEN ST GAS ENG+ 10KW 400CY 1-3PH TO AC 120 120/208V SKD	MOGAS	2.40
58	J49398	GEN ST GAS ENG+ 10KW 60CY 1-3PH AC 120 120/240 120/208V SKID	MOGAS	2.40
59	J51453	GEN ST GAS TURBINE ENG+ 30KW AC 120/208V 3PH 400CY SKID MTD	Diesel	9.50

Table 5-8. Marine Equipment—Fuel Data

1	1 LIN	2 Nomenclature	3 Type of fuel	4 Consumption (gph)
2	B31745	BARGE REFRIGERATED+ NONPROP	Diesel	4.50
3	B83582	BOAT BRIDGE ERECTION INBOARD ENGINE+ ALUMINUM GAS DRVN 27 FT LG.	MOGAS	15.00
4	B83993	BOAT PASSENGER AND CARGO+	Diesel	18.00
5	B84130	BOAT PICKET+ 36 TO 47 FT	Diesel	19.00
6	B84267	BOAT PICKET+ 52 TO 65 FT	Diesel	31.30
7	F35953	CRANE BARGE+ 60 TON	Diesel	19.70
8	F36090	CRANE BARGE+ 89 TO 250 TON	Diesel	168.00
9	L36602	LANDING CRAFT MECHANIZED+ 50 TO 56 FT	Diesel	25.00
10	L36739	LANDING CRAFT MECHANIZED+ 69 FT	Diesel	31.00
11	L36876	LANDING CRAFT UTILITY+ 115 FT	Diesel	38.40
12	R50543	RECOVERY VEHICLE FULL TRACKED+ LIGHT ARMORED	Diesel	1.89
13	R50680	RECOVERY VEHICLE FULL TRACKED+ MEDIUM	MOGAS	2.79
14	R50817	RECOVERY VEHICLE FULL TRACKED+ HEAVY	MOGAS	1.62
15	X70772	TUG+ 200 TO 440 HP	Diesel	25.60
16	X70909	TUG+ 600 TO 650 HP	Diesel	39.80
17	X71046	TUG+ 1200 TO 1530 HP	Diesel	82.70
18	Y00176	VESSEL LIQUID CARGO+	Diesel	80.00

5-5. Weights, Volumes, and Conversion Factors

Weights, volumes, and conversion factors for petroleum products are in table 5-11.

5-6. Estimating Class III Requirements

a. Estimating Solid Fuel Requirements. The factors below are based on the use of coal only, assuming use of no petroleum types of fuel. When firewood or peat is substituted, 2 pounds of such fuel is required in lieu of 1 pound of coal. Factors apply to temperate climate.

(1) *Utilities.*

Item	*Weight*
Space and water heating and cooking, per man per day	4.0 lb
Cooking only, per man per day	1.5 lb
Hospital use, per bed per day:	
Winter	12.0 lb
Summer	5.0 lb
Laundry, fixed, per unit per day	32.0 STON

Table 5-9. Other Equipment—Fuel Data

1	1 LIN	2 Nomenclature	3 Type of fuel	4 Consumption (gph)
2	J30766	GENERAT AND CHARG PL ACETY STLR MTD+ 750 CU FT PER HR	Diesel	3.00
3	J31177	GENERAT/CHRG PL HYDROG-CARB DIOX STLR MTD+ ELEC DRVN COMP (ARMY).	Diesel	15.00
4	K24862	HEATER DUCT TYPE PTBL+ GAS 250000 BTU WHL MTD	MOGAS	2.00
5	K24931	HEATER DUCT TYPE PTBL+ GAS 400000 BTU GAS AND ELEC DRVN BLOWER	MOGAS	3.82
6	K25890	HEATER SPACE+ COAL OR OIL 45000 BTU 18-5/8 IN H	Diesel	0.90
7	K26275	HEATER SPACE+ GAS 60000 BTU	MOGAS	1.00
8	K26301	HEATER SPACE+ MULTIFUEL VAN TYPE 60000 BTU	MOGAS	1.00
9	L48041	LAUNDRY UNIT TRAILER MOUNTED+ EX 30 W 60	MOGAS	6.00
10	L48178	LAUNDRY UNIT TRAILER MOUNTED+ W/G ENG	MOGAS	8.00
11	L48315	LAUNDRY UNIT TRAILER MOUNTED+ SINGLE TRAILER 60 LB CAP	MOGAS	8.00
12	L80632	LOCOMOTIVE DIESEL+ 56-1/2 IN GA 44 TO 80 TON D-FS	Diesel	8.30
13	R65544	REFRIGERATION UNIT MECHANICAL PANEL TYPE+ GASOLINE DRIVEN	MOGAS	1.50
14	R65681	REFRIGERATION UNIT MECHANICAL PANEL TYPE+ GASOLINE DRIVEN	MOGAS	1.50
15	R65818	REFRIGERATION UNIT MECHANICAL PANEL TYPE+ GASOLINE DRIVEN	MOGAS	1.50

Table 5-10. Bulk Petroleum Capacities

1	1	2	3
1	LIN	Type of carrier/container	Amount carried/contained (gal)
		Barges:	
2	B30786	Har and canal	15,000 to 30,000
3	B30923	Coastwise	200,000 to 400,000
4	----------	Navy pon	84,000
		Pipelines:	
5	----------	4-in	304,000 per day
6	----------	6-in	655,000 per day
7	----------	8-in	1,135,000 per day
		Railroad tk cars, petrl:	
8	R03112	Fgn, narrow-gage	6,000
9	R03249	Fgn, broad-gage	10,000
10	R03523	Dom	10,000
		Ships:	
11	----------	Large tanker	2.5 to 11 million
12	----------	Small tanker	600,000 to 2 million
		Stor tks:	
13	V15292	Collapsible, fabric	1,000; 3,000; 10,000; 52,500
14	V15566	Horiz, skid-mtd	600
15	V16696	Bolted steel	10,500; 42,000; 420,000
16	X23327	Transporter, liq, rolling-wheel-type	1,000
17	X57408	Trk, tk, fuel-svc, 2-1/2-ton, 6x6	1,200
18	X59463	Trk, trac, 5-ton, 6x6, with stlr, tk, fuel, 12-ton	5,000

Table 5–11. Weights, Volumes, and Conversion Factors for Petroleum Products

1	1	2	3	4	5	6	7	8	9	10	11	12	13	14	15	16	17
	Product	Packaging	Wt (lb)	Cu ft		Conversion factors		Gal per STON	Gal per LTON	Gal per MTON [1]	Bbl per LTON [1]	Packages per STON	Packages per LTON	Packages per MTON	Cap of veb for carrying filled containers [2]		
				Actual	Planning factor	Gal to lb	Lb to gal								1½-ton tir	2½-ton trk	5-ton trk
2	AVGAS	Bulk				5.90	0.169	339.0	379.7		9.04						
3		55-gal drums [3]	373.0	9.03	11	6.91	0.145	289.4	324.2	187.8		5.36	6.00	3.48	8	14	28
4		55-gal drums [4]	389.0	8.80	11	7.20	0.139	277.8	311.1	192.8		5.14	5.76	3.57	8	13	26
5		55-gal drums [5]	364.0	9.20	11	6.90	0.145	289.9	324.6	181.2		5.49	6.15	3.42	9	14	28
6		5-gal cans [6]	40.5	0.81	1	8.00	0.125	250.0	280.0	200.0		49.40	55.30	40.00	74	124	248
7	Jet fuel (JP–4)	Bulk				6.42	0.156	312.0	349.4		8.058						
8		55-gal drums [3]	399.0	9.03	11	7.39	0.135	270.0	302.4	187.8		5.01	5.61	3.48	8	13	25
9		55-gal drums [4]	415.0	8.80	11	7.68	0.130	260.0	291.2	192.7		4.82	5.40	3.57	8	12	24
10		55-gal drums [5]	392.0	9.20	11	7.40	0.135	270.0	302.4	181.2		5.10	5.71	3.42	8	14	28
11	MOGAS	Bulk				6.11	0.164	327.3	366.6		8.73						
12		55-gal drums [3]	384.0	9.03	11	7.11	0.141	281.2	315.1	187.8		5.21	5.83	3.48	8	13	26
13		55-gal drums [4]	400.0	8.80	11	7.41	0.135	269.9	302.3	192.8		5.00	5.60	3.57	8	13	26
14		55-gal drums [5]	376.0	9.20	11	7.09	0.141	282.1	315.9	181.2		5.32	5.96	3.42	8	14	28
15		5-gal cans [6]	41.6	0.81	1	8.32	0.120	240.4	269.2	200.0		48.10	53.80	40.00	73	121	242
16	Diesel fuel	Bulk				6.99	0.143	286.1	320.5		7.63						
17		55-gal drums [3]	432.0	9.03	11	8.00	0.125	250.0	280.0	187.8		4.63	5.19	3.48	7	12	24
18		55-gal drums [4]	448.0	8.80	11	8.30	0.120	241.0	269.9	192.7		4.46	5.00	3.57	7	12	24
19		55-gal drums [5]	430.0	9.20	11	8.11	0.123	246.6	276.2	181.2		4.65	5.21	3.42	7	12	24
20		5-gal cans [6]	46.0	0.81	1	9.20	0.109	317.4	243.5	200.0		43.50	48.70	40.00	66	109	218
21	Kerosene	Bulk				6.80	0.147	294.1	329.4		7.84						
22		55-gal drums [3]	421.0	9.03	11	7.80	0.128	256.4	287.1	187.8		4.75	5.32	3.48	8	12	24
23		55-gal drums [4]	437.0	8.80	11	8.09	0.124	247.2	276.9	192.8		4.58	5.13	3.57	7	12	24
24		55-gal drums [5]	351.0	9.20	11	6.62	0.151	302.1	338.3	181.2		5.70	6.38	3.42	9	15	30
25		5-gal cans [6]	45.0	0.81	1	9.00	0.111	222.2	248.9	200.0		44.40	49.80	40.00	67	112	224
26	Lub oils	Bulk				7.60	0.132	263.2	294.7		7.02						
27		55-gal drums [3]	472.0	9.03	11	8.58	0.117	233.1	261.0	191.3		4.24	4.75	3.48	7	11	22
28		55-gal drums [4]	488.0	8.80	11	8.87	0.113	225.5	252.5	196.4		4.10	4.59	3.57	7	11	22
29		55-gal drums [5]	462.0	9.20	11	8.56	0.117	233.6	261.7	184.6		4.33	4.85	3.42	7	11	22
30		5-gal cans [6]	49.0	0.81	1	9.80	0.102	204.1	228.6	181.2		40.80	45.70	40.00	62	103	206
31		1-qt cans (12 per case)	35.0	0.88	1							58.00	64.90	40.00	86	143	286
32		1-qt cans (24 per case)	60.0	1.60	2							33.40	37.30	20.00	50	84	168
33		5-qt cans (6 per case)	77.0	1.90	2							26.00	29.10	20.00	39	65	130
34	Greases	25-lb pails	29.0	0.95	1							69.00	77.20	40.00	104	173	346
35		5-lb cans (6 per case)	44.0	1.10	2							45.40	50.90	20.00	69	114	227
	Fog oils:																
36	SGF1	Bulk				7.11	0.140	281.0	314.0		7.49						
37		55-gal drums [3]	438.0	9.03	11	8.11	0.123	246.6	276.2	191.3		4.50	5.02	3.48	7	11	22
38		55-gal drums [4]	588.0	8.80	11	8.40	0.110	238.0	266.6	196.4		4.32	4.84	3.57	7	11	22
39		55-gal drums [5]	421.0	9.20	11	8.10	0.123	246.9	276.5	184.6		4.57	5.12	3.42	7	11	22

See footnotes at end of table.

Table 5-11. Weights, Volumes, and Conversion Factors for Petroleum Products—Continued

1	1 Product	2 Packaging	3 Wt (lb)	4 Cu ft Conversion factors: Actual	5 Cu ft Conversion factors: Planning factor	6 Cu ft Conversion factors: Gal to lb	7 Cu ft Conversion factors: Lb to gal	8 Gal per STON	9 Gal per LTON	10 Gal per MTON [1]	11 Bbl per LTON [1]	12 Packages per STON	13 Packages per LTON	14 Packages per MTON	15 Cap of veh for carrying filled containers [2]: 1½-ton tir	16 Cap of veh for carrying filled containers [2]: 2½-ton trk	17 Cap of veh for carrying filled containers [2]: 5-ton trk
40	SGF2	Bulk				6.99	0.143	286.0	320.0		7.63						
41		55-gal drums [3]	431.0	9.03	11	7.99	0.120	250.3	280.3	191.3		4.54	5.09	3.48	7	11	22
42		55-gal drums [4]	616.0	8.80	11	8.28	0.120	241.5	270.5	196.4		4.39	4.90	3.57	7	11	22
43		55-gal drums [5]	478.0	9.20	11	7.90	0.121	253.1	283.5	184.6		4.68	5.25	3.42	7	11	23

[1] For ocean-shipping, storage, and pipeline computations, bulk petroleum products usually are measured in bbl of 42 gal each or in LTON.

[2] Based on authorized loads in STON. When overloads are authorized, these quantities may be increased to the cubic capacity of the veh or to 100-percent overweight, whichever limit is reached first.

[3] 18-gage standard—weighs 54 lb empty—filled to 54 gal with light products, 55 gal with heavy products. Federal Specification PPP-D-729, Amendment 1.

[4] 16-gage standard—weighs 70 lb empty—filled to 54 gal with light products, 55 gal with heavy products. Federal Specification PPP-D-729, Amendment 1.

[5] 18-gage limited standard—weighs 52 lb empty—filled to 53 gal with light products, 54 gal with heavy products. Federal Specification PPP-D-729.

[6] For planning purposes, wt of MOGAS may be taken as 42 lb and wt of lub oil for engines as 50 lb per 5-gal can, including wt of can. Cans, 5-gal, weigh approximately 11 lb empty.

Note. Factors in this table are based on U.S. gal.

(2) *Steam locomotives.* Table 5–12 includes coal and fuel oil consumption data for steam locomotives. Rate of consumption is designated in pounds either per train-kilometer (tn-km) or per hour.

(*a*) In estimating coal requirements, add 10 percent to the computed rate of consumption to allow for spillage and waste.

(*b*) For general planning, assume operation of switch engines for 20 hours a day; allow 4 hours a day for maintenance.

b. Estimating Liquid Fuel Requirements. Major factors that control liquid fuel requirements in military operations are as follows:

(1) *Displacement.* The average distance that each vehicle moves is determined by measuring the distance that the center of mass moves. Administrative or march movements are computed based on using available road nets. Movements under battle conditions are computed on the basis of selected organizational elements proceeding cross country. Experience tables provide consumption data for moving an organization. For planning, assume that cross-country-battle fuel consumption is at a rate of 2.5 times that given for road movements in the fuel data tables in paragraph 5–7.

(2) *Supply.* During a displacement, certain vehicles of an organization must make round-trip supply hauls. Since these hauls generally are made to supply points at varying distances from the organization, an average round-trip supply distance must be determined. Erperience indicates that daily requirements for supply hauls are about equal to 10 percent of the total organizational consumption per kilometer or displacement multiplied by the average round-trip supply distance. When the organization is not on the move, supply haul requirements are included in the composite requirement described in (4) below and are not computed separately.

(3) *Service.* Supplemental daily requirements exist for movement of vehicles in bivouac areas and on reconnaissance, engine warmup, and abnormal periods of low-gear operation. These items will differ with the nature of the operation, weather, roads, and terrain and they must be estimated in accordance with general conditions. Under average conditions, these requirements can be estimated by using the consumption necessary to move all vehicles in the organization 16 kilometers over roads. This factor applies when the organization is on the march or in combat.

(4) *Housekeeping.* Additional daily requirements exist for administrative vehicles, kitchens, and gasoline-powered equipment and for maintaining and testing engines. When the organization is not on the march, these rquirements are grouped in a composite daily requirement, as noted under each fuel data table in paragraph 5–7. When the organization is on the move, the requirements for administrative vehicles (not supply hauls) and gasoline-powered equipment are absorbed by maintenance, and the testing factor is absorbed by the service factor. However, the kitchen requirement must be added on the basis of a daily consumption per kitchen of 15 gallons of gasoline.

(5) *Wastage.* This factor cover evaporation, spillage, and small combat losses. It applies only to road movement in the combat zone. Its computation is 10 percent of the sum of all other consumption figures.

(6) *Example.* An infantry division (mecha-

Table 5–12. Steam Locomotive Fuel Requirements

	1	2	3	4
1	Type of locomotive	Type of operation	Average rate of consumption	
			Lb per tn-km	Lb per hr
	Coal			
2	2–8–0, 82-ton, std-gage	Road	56	700
3	2–8–0, 90-ton, std-gage	Road	71	950
4	2–8–2, 60-ton, narrow-gage	Road	62	750
	Fuel oil			
5	2–8–0, std-gage	Road	35	450
6	2–8–2, narrow-gage	Road	38	500

nized) (table 5–15), including six infantry battalions (mechanized) and four tank battalions (table 5–18), is to make the following movement: 1st day—150 kilometers in zone to bivouac area at field army rear boundary; 2d day—no movement; 3d day—100 kilometers forward in combat zone; and 4th day—10 kilometers, with 8 kilometers under cross-country-battle conditions for all elements except the division support command (DISCOM). Average round-trip supply distances for the 1st day are 50 kilometers; for the 2d day, 30 kilometers; for the 3d day, 60 kilometers; and for the 4th day, 50 kilometers. Estimate the total number of gallons of diesel and gasoline required for the 4-day period.

Note. Paragraph 5–7 contains supplemental information.

1st day

(*a*) Displacement of 150 km:
1. Diesel requirements:
Multiply 150 km by 178.26 gal per km (from table 5–15, colm 4) and by 447.52 gal per km (for 6 inf bn (mech) and 4 tk bn) (table 5–18, colm 4) ---------- = 93,867
2. Gasoline requirements:
Multiply 150 km by 648.45 and 911.48 gal per km (from same tables, colm 3) ---------- = 233,990

(*b*) Supply requirements:
1. Diesel—multiply 50 km (supply distance) by 62.58 (10 percent of division consumption per km) ------- = 3,129
2. Gasoline—multiply 50 km (supply distance) by 155.99 (10 percent of division consumption per km) --- = 7,799

(*c*) Service requirements:
1. Diesel—multiply 16 km by 625.8 (total division consumption per km) ---------- = 10,013
2. Gasoline—multiply 16 km by 1,559.9 (total division consumption per km) ---------- = 24,958

(*d*) Kitchen requirements:
Gasoline—multiply 15 gal by 119 organic kitchens ---------- = 1,785

2d day

(*e*) Requirements when division is not on the march (from para 5–7*b*(4)):
Gasoline ---------- = 4,000

3d day

(*f*) Displacement of 100 km:
1. Diesel requirements:
Multiply 100 km by 625.8 gal per km = 62,580
2. Gasoline requirements:
Multiply 100 km by 1,559.9 gal per km ---------- = 155,990

(*g*) Supply requirements:
1. Diesel—multiply 60 km by 62.58 (10 percent of division consumption per km) ---------- = 3,755
2. Gasoline—multiply 60 km by 155.99 (10 percent of division consumption per km) ---------- = 9,359

(*h*) Service requirements:
1. Diesel—multiply 16 km by 625.8 gal per km ---------- = 10,013
2. Gasoline—multiply 16 km by 1,559.9 gal per km ---------- = 24,958

(*i*) Kitchen requirements:
Gasoline—multiply 15 gal by 119 organic kitchens ---------- = 1,785

(*j*) To account for wastage:
1. Diesel—take 10 percent of (*f*)*1* + (*g*)*1* + (*h*)*1* above ---------- = 7,635
2. Gasoline—take 10 percent of (*f*)*2* + (*g*)*2* + (*h*)*2* + (*i*) above ------ = 19,031

4th day

(*k*) Displacement of entire division 10 km (with 8 km cross country and 2 km on roads):
1. Diesel requirements:
Multiply 2 km (road displacement) by 625.8 gal per km ---------- = 1,252
2. Gasoline requirements:
Multiply 2 km (road displacement) by 1,559.9 gal per km ---------- = 3,120

(*l*) Displacement of DISCOM:
1. Diesel requirements ---------- = 0
2. Gasoline requirements:
Multiply 8 km (road displacement) by 83.7 gal per km ---------- = 670

(*m*) Displacement of combat units:
1. Diesel requirements:
Multiply 8 km (cross-country-battle displacement) by 625.78 gal per km (division total less DISCOM total) multiplied by 2.5 for cross-country-battle factor (para 5–6*b* (1)) ---------- = 12,516
2. Gasoline requirements:
Multiply 8 km (cross-country-battle displacement) by 1,476.23 gal per km (division total less DISCOM total) multiplied by 2.5 for cross-country-battle factor ---------- = 29,525

(*n*) Supply requirements:
1. Diesel—multiply 50 km (supply distance) by 62.58 (10 percent of division consumption per km) --- = 3,129
2. Gasoline—multiply 50 km (supply distance) by 155.99 (10 percent of division consumption per km) --- = 7,799

(*o*) Service requirements:
1. Diesel—multiply 16 km by 625.8 gal per km ---------- = 10,013
2. Gasoline—multiply 16 km by 1,559.9 gal per km ---------- = 24,958

(*p*) Kitchen requirements:
Gasoline—multiply 15 gal by 119 organic kitchens ---------- = 1,785

(*q*) To account for wastage:
1. Diesel—take 10 percent of (*k*)*1* + (*l*) + (*n*)*1* + (*o*)*1* above ------- = 1,439
2. Gasoline—take 10 percent of (*k*)*2* + (*l*)*2* + (*n*)*2* + (*o*)*2* + (*p*) above = 3,833

(*r*) Total estimate for 4 days:
1. Diesel—add (*a*)*1* + (*b*)*1* + (*c*)*1* + (*f*)*1* + (*g*)*1* + (*h*)*1* + (*j*)*1* + (*k*)*1* + (*l*)*1* + (*m*)*1* + (*n*)*1* + (*o*)*1* + (*q*)*1* ---------- = 219,341
2. Gasoline—add (*a*)*2* + (*b*)*2* = (*c*)*2* + (*d*) + (*e*) + (*f*)*2* + (*g*)*2* + (*h*)*2* + (*i*) + (*j*)*2* + (*k*)*2* + (*l*)*2* + (*m*)*2* + (*n*)*2* + (*o*)*2* + (*p*) + (*q*)*2* ---------- = 555,345

c. Gallons-Per-Man-Per-Day Method of Estimating Petroleum Requirements. The gallons-per-man-per-day method of estimating petroleum requirements is used in the early planning stages when definitive information is not available on the numbers and types of vehicles. Because of the variables in organizational composition, this method seldom is used below field army and never below corps; however, once established for a given theater, the figure may be used for requisitioning purposes. *The gallons-per-man-per-day method is to be used only as a guide, not as a substitute for more exacting computation.* The consumption in gallons per man per day in various theaters necessarily will vary with terrain, climate, ratio between land and amphibious operations, and units using special vehicles and equipment. The figures in table 5–44 should be adjusted to fit each particular area as soon as experience shows any variance between these planning factors and actual usage. To compute estimated petroleum requirements, multiply troop strength by factors listed in table 5–44.

5–7. Fuel Requirements (Field Army Units)

a. Requirements for motor gasoline (MOGAS) and diesel fuel for field army units are tabulated in tables 5–13 through 5–19.

b. Tabulations are governed by the following:

(1) Columns 3 and 4 of each table show the number of gallons of fuel required to move *a specific unit 1 kilometer* (except for Army aircraft, which are not transported on the ground). Although class III A fuel is not considered in moving a unit on the ground, the class III fuel used by the tankers carrying class III A fuel during the move is counted. When multifuel equipment is used, diesel consumption is assumed for those particular items of equipment.

(2) Figures in columns 3 and 4 do not include fuel requirements of equipment that normally does not move under its own power on long marches, e.g., equipment mounted on vehicles, bulldozers, scoop-type loaders, or forklift trucks.

(3) The number of gallons in columns 3 and 4 are multipled by a factor of 2.5 for cross-country-battle conditions. The 10-percent handling factor (para 5–6*b*(5)) is not applied when the cross-country factor is used.

(4) When a unit is not on the march, 4,000 gallons of fuel per division is required for administrative vehicles, kitchens, and gasoline-powered equipment. Daily consumption of gasoline per kitchen is 15 gallons (FM 10–13).

(5) Fuel reserve in vehicles has been computed as two 5-gallon cans per truck, except for ¼-ton trucks and similar small vehicles, which carry one 5-gallon can each, and 2½- and 5-ton wreckers, which carry four 5-gallon cans each.

(6) Columns 9 through 12 represent carrying capacity of all metal tanks, tankers, collapsible drums, and fuel-dispensing vehicles organic to each division. Units authorized airplanes and helicopters use a portion of their bulk fuel-carrying capacity for class III A fuel.

(7) To obtain other POL requirements, multiply the basic fuel amount by the following factors:

Product	*Percentage of fuel*	*Unit of measure*
Engine oil	2	Gallons
Gear lube	1	Gallons
Grease	2	Pounds

(8) Division tables are based on the engineer bridge company with mobile assault bridging equipment.

(9) Column 13 was determined at 150 men per kitchen.

c. Pipeline Requirements. Estimates of daily requirements for a 12-division field army are based on a factor of 7 gallons per man per day. Requirements for this force vary from 3,000,000 to 4,000,000 gallons daily; for an eight-division field army, requirements vary from 2,000,000 to 3,000,000 gallons per day, depending in each instance on the composition of the force and the tactical situation. However, for forces smaller than a 12-division field army, the 7-gallon-per-man-per-day factor tends to vary. When COMMZ

Table 5–13. Armored Division Base (TOE 17H)—Fuel Data

1	Unit	TOE	Fuel required to travel 1 km (gal)		Unit capacity (gal)		Unit gas can capacity (gal)		Bulk fuel (gal)		Total fuel capacity (gal)		Kitchens
			MOGAS	Diesel	MOGAS	Diesel	MOGAS	Diesel	MOGAS	Diesel	MOGAS	Diesel	
2	HHC	17–4H	6.78	0.00	1,835	0	355	0	0	0	2,190	0	1
3	MP co	19–27H	2.16	0.00	1,059	0	315	0	0	0	1,374	0	1
4	Div avn co	17–87H	2.58	0.00	950	0	240	0	0	0	1,190	0	1
5	Sig bn	11–35H	15.18	0.00	5,783	0	1,845	0	0	0	7,628	0	4
6	HHC	11–36H	(2.67)	(0.00)	(984)	(0)	(240)	(0)	(0)	(0)	(1,224)	(0)	(1)
7	Comd op co	11–37H	(4.71)	(0.00)	(1,779)	(0)	(575)	(0)	(0)	(0)	(2,354)	(0)	(1)
8	Fwd comm co	11–38H	(3.54)	(0.00)	(1,401)	(0)	(515)	(0)	(0)	(0)	(1,916)	(0)	(1)
9	Spt op co	11–39H	(4.26)	(0.00)	(1,619)	(0)	(515)	(0)	(0)	(0)	(2,134)	(0)	(1)
10	Engr bn	5–145H	96.17	23.04	12,376	3,000	2,160	160	17,640	4,860	32,176	8,020	6
11	HHC	5–146H	(19.25)	(0.00)	(4,126)	(0)	(580)	(0)	(17,640)	(4,860)	(22,346)	(4,860)	(1)
12	4 cbt engr co (each)	5–147H	(18.27)	(4.36)	(1,686)	(750)	(330)	(40)	(0)	(0)	(2,016)	(790)	(1)
13	Brg co	5–148H	(3.84)	(5.60)	(1,506)	(0)	(260)	(0)	(0)	(0)	(1,766)	(0)	(1)
14	3 bde HHC (each)	17–42H	10.65	1.89	1,532	320	260	0	0	0	1,792	320	1
15	Armd cav sqdn	17–105H	99.48	16.74	13,561	1,600	2,520	0	0	0	16,081	1,600	5
16	HHT	17–106H	(23.69)	(3.78)	(4.136)	(640)	(690)	(0)	(0)	(0)	(4,826)	(640)	(1)
17	3 armd cav trp (each)	17–107H	(24.56)	(4.32)	(2,882)	(320)	(555)	(0)	(0)	(0)	(3,437)	(320)	(1)
18	Air cav trp	17–108H	(2.11)	(0.00)	(779)	(0)	(165)	(0)	(0)	(0)	(944)	(0)	(1)
19	Div arty	6–300H	260.71	123.36	38,736	9,490	6,545	0	0	0	45,281	9,490	25
20	HHB	6–302H	(4.96)	(0.00)	(1,915)	(0)	(545)	(0)	(0)	(0)	(2,460)	(0)	(2)
21	3 FA bn, 155-mm, SP (each)	6–365H	(65.30)	(33.30)	(8,433)	(2,530)	(1,355)	(0)	(0)	(0)	(9,788)	(2,530)	(5)
22	HHB	6–366H	(13.80)	(0.00)	(1,821)	(0)	(315)	(0)	(0)	(0)	(2,136)	(0)	(1)
23	3 FA btry (each)	6–367H	(15.05)	(9.84)	(1,454)	(630)	(230)	(0)	(0)	(0)	(1,684)	(630)	(1)
24	Svc btry	6–369H	(6.35)	(3.78)	(2,250)	(640)	(350)	(0)	(0)	(0)	(2,600)	(640)	(1)
25	FA bn, 8-in, SP	6–395H	(51.31)	(23.46)	(8,890)	(1,900)	(1,205)	(0)	(0)	(0)	(10,095)	(1,900)	(5)
26	HHB	6–396H	(5.33)	(0.00)	(1,105)	(0)	(285)	(0)	(0)	(0)	(1,390)	(0)	(1)
27	3 FA btry (each)	6–397H	(13.37)	(6.56)	(2,081)	(420)	(235)	(0)	(0)	(0)	(2,316)	(420)	(1)
28	Svc btry	6–399H	(5.87)	(3.78)	(1,542)	(640)	(215)	(0)	(0)	(0)	(1,757)	(640)	(1)
29	FA bn, HJ	6–175H	(8.54)	(0.00)	(2,632)	(0)	(730)	(0)	(0)	(0)	(3,362)	(0)	(3)
30	HQ, H&S btry	6–176H	(3.00)	(0.00)	(1,178)	(0)	(340)	(0)	(0)	(0)	(1,518)	(0)	(1)
31	2 FA btry (each)	6–177H	(2.77)	(0.00)	(727)	(0)	(195)	(0)	(0)	(0)	(922)	(0)	(1)
32	DISCOM	29–21H	84.80	0.00	21,667	0	5,245	0	117,600	32,400	144,512	32,400	19
33	HHD	29–2H	(0.90)	(0.00)	(375)	(0)	(105)	(0)	(0)	(0)	(480)	(0)	(1)
34	AG DS co	12–7H	(1.19)	(0.00)	(457)	(0)	(115)	(0)	(0)	(0)	(572)	(0)	(2)
35	Div DPU	29–590H	(1.45)	(0.00)	(257)	(0)	(85)	(0)	(0)	(0)	(342)	(0)	(1)
36	Fin DS co	14–7H	(0.27)	(0.00)	(108)	(0)	(30)	(0)	(0)	(0)	(138)	(0)	(1)
37	Maint bn	29–35H	(47.24)	(0.00)	(11,316)	(0)	(2,330)	(0)	(0)	(0)	(13,646)	(0)	(7)
38	HQ & lt maint co	29–36H	(6.87)	(0.00)	(1,613)	(0)	(465)	(0)	(0)	(0)	(2,078)	(0)	(1)
39	Hv maint co	29–38H	(11.15)	(0.00)	(3,095)	(0)	(440)	(0)	(0)	(0)	(3,535)	(0)	(2)
40	3 fwd spt co (each)	29–37H	(7.43)	(0.00)	(1,848)	(0)	(355)	(0)	(0)	(0)	(2,203)	(0)	(1)
41	Trans acft maint co	55–424H	(6.93)	(0.00)	(1,064)	(0)	(360)	(0)	(0)	(0)	(1,424)	(0)	(1)

42	Med bn	8–35H	(10.05)	(0.00)	(3,725)	(0)	(1,045)	(0)	(0)	(0)	(4,770)	(0)	(4)
43	HQ & spt co	8–36H	(4.11)	(0.00)	(1,529)	(0)	(415)	(0)	(0)	(0)	(1,944)	(0)	(1)
44	3 med co (each)	8–37H	(1.98)	(0.00)	(732)	(0)	(210)	(0)	(0)	(0)	(942)	(0)	(1)
45	S&T bn	29–115H	(23.70)	(0.00)	(5,429)	(0)	(1,535)	(0)	(117,600)	(32,400)	(124,564)	(32,400)	(3)
46	HHC	29–6H	(1.12)	(0.00)	(390)	(0)	(130)	(0)	(0)	(0)	(520)	(0)	(1)
47	S&S co	10–7H	(2.45)	(0.00)	(807)	(0)	(215)	(0)	(0)	(0)	(1,022)	(0)	(1)
48	TMT co	55–87H	(20.13)	(0.00)	(4,232)	(0)	(1,190)	(0)	(117,600)	(32,400)	(123,022)	(32,400)	(1)
49	ADA bn, CHAP/Vulcan, SP	44–325H	49.83	9.45	9,284	1,600	1,860	0	0	0	11,144	1,600	5
50	HHB	44–326H	(2.45)	(1.89)	(948)	(320)	(260)	(0)	(0)	(0)	(1,208)	(320)	(1)
51	2 ADA btry, Vulcan, SP (each).	44–327H	(20 74)	(1.89)	(3,068)	(320)	(530)	(0)	(0)	(0)	(3,598)	(320)	(1)
52	2 ADA btry, CHAP, SP (each)	44–328H	(2.95)	(1.89)	(1,100)	(320)	(270)	(0)	(0)	(0)	(1,370)	(320)	(1)
53	Armd div base total	17H	649.64	178.26	109,847	16,650	21,865	160	135,240	37,260	266,952	54,070	70

Table 5–14. Infantry Division Base (TOE 7H)—Fuel Data

1	1 Unit	2 TOE	3 Fuel required to travel (gal) MOGAS	4 Fuel required to travel (gal) Diesel	5 Unit capacity (gal) MOGAS	6 Unit capacity (gal) Diesel	7 Unit gas can capacity (gal) MOGAS	8 Unit gas can capacity (gal) Diesel	9 Bulk fuel (gal) MOGAS	10 Bulk fuel (gal) Diesel	11 Total fuel capacity (gal) MOGAS	12 Total fuel capacity (gal) Diesel	13 Kitchens
2	HHC	7–4H	3.74	0.00	1,661	0	365	0	0	0	2,026	0	1
3	MP co	19–27H	2.16	0.00	1,059	0	315	0	0	0	1,374	0	1
4	Cbt avn bn	7–75H	6.30	0.00	2,357	0	615	0	0	0	2,972	0	3
5	HHC	7–76H	(2.40)	(0.00)	(901)	(0)	(255)	(0)	(0)	(0)	(1,156)	(0)	(1)
6	Aslt hel co	7–77H	(1.96)	(0.00)	(735)	(0)	(185)	(0)	(0)	(0)	(920)	(0)	(1)
7	Avn GS co	7–78H	(1.94)	(0.00)	(721)	(0)	(175)	(0)	(0)	(0)	(896)	(0)	(1)
8	Sig bn	11–35H	15.18	0.00	5,783	0	1,845	0	0	0	7,628	0	4
9	HHC	11–36H	(2.67)	(0.00)	(984)	(0)	(240)	(0)	(0)	(0)	(1,224)	(0)	(1)
10	Comd op co	11–37H	(4.71)	(0.00)	(1,779)	(0)	(575)	(0)	(0)	(0)	(2,354)	(0)	(1)
11	Fwd comm co	11–38H	(3.54)	(0.00)	(1,401)	(0)	(515)	(0)	(0)	(0)	(1,916)	(0)	(1)
12	Spt op co	11–39H	(4.26)	(0.00)	(1,619)	(0)	(515)	(0)	(0)	(0)	(2,134)	(0)	(1)
13	Engr bn	5–155H	27.27	12.14	11,175	1,125	1,520	60	20,002	2,497	32,697	3,682	5
14	HHC	5–156H	(10.38)	(0.00)	(3,471)	(0)	(540)	(0)	(20,002)	(2,497)	(24,013)	(2,497)	(1)
15	3 cbt engr co (each)	5–157H	(4.35)	(2.18)	(2,066)	(375)	(240)	(20)	(0)	(0)	(2,306)	(395)	(1)
16	Brg co	5–148H	(3.84)	(5.60)	(1,506)	(0)	(260)	(0)	(0)	(0)	(1,766)	(0)	(1)
17	3 bde HHC (each)	7–42H	2.32	0.00	977	0	275	0	0	0	1,252	0	1
18	Armd cav sqdn	17–105H	99.48	16.74	13,561	1,600	2,520	0	0	0	16,081	1,600	5
19	HHT	17–106H	(23.69)	(3.78)	(4,136)	(640)	(690)	(0)	(0)	(0)	(4,826)	(640)	(1)
20	3 armd cav trp (each)	17–107H	(24.56)	(4.32)	(2,882)	(320)	(555)	(0)	(0)	(0)	(3,437)	(320)	(1)
21	Air cav trp	17–108H	(2.11)	(0.00)	(779)	(0)	(165)	(0)	(0)	(0)	(944)	(0)	(1)
22	Div arty	6–100H	83.83	8.45	26,907	740	6,205	0	0	0	33,112	740	26
23	HHB	6–302H	(4.96)	(0.00)	(1,915)	(0)	(545)	(0)	(0)	(0)	(2,460)	(0)	(2)
24	3 FA bn, 105-mm, towed (each).	6–155H	(13.24)	(0.00)	(4,817)	(0)	(1,195)	(0)	(0)	(0)	(6,012)	(0)	(5)

Table 5-14. Infantry Division Base (TOE 7H)—Fuel Data—Continued

1	Unit	TOE	Fuel required to travel 1 km (gal)		Unit capacity (gal)		Unit gas can capacity (gal)		Bulk fuel (gal)		Total fuel capacity (gal)		Kitchens
			MOGAS	Diesel	MOGAS	Diesel	MOGAS	Diesel	MOGAS	Diesel	MOGAS	Diesel	
25	HHB	6-156H	(2.66)	(0.00)	(1,120)	(0)	(360)	(0)	(0)	(0)	(1,480)	(0)	(1)
26	3 FA btry (each)	6-157H	(2.31)	(0.00)	(814)	(0)	(190)	(0)	(0)	(0)	(1,004)	(0)	(1)
27	Svc btry	6-159H	(3.65)	(0.00)	(1,255)	(0)	(265)	(0)	(0)	(0)	(1,520)	(0)	(1)
28	FA bn, 155-mm, towed/8-in., SP.	6-165H	(30.61)	(8.45)	(7,909)	(740)	(1,345)	(0)	(0)	(0)	(9,254)	(740)	(6)
29	HHB	6-166H	(2.32)	(0.00)	(976)	(0)	(330)	(0)	(0)	(0)	(1,306)	(0)	(1)
30	3 FA btry, 155-mm, towed (each)	6-167H	(2.95)	(0.00)	(1,060)	(0)	(180)	(0)	(0)	(0)	(1,240)	(0)	(1)
31	FA btry, 8-in., SP	6-358H	(15.17)	(6.56)	(2,240)	(420)	(220)	(0)	(0)	(0)	(2,460)	(420)	(1)
32	Svc btry	6-169H	(4.27)	(1.89)	(1,513)	(320)	(255)	(0)	(0)	(0)	(1,768)	(320)	(1)
33	FA bn, HJ	6-175H	(8.54)	(0.00)	(2,632)	(0)	(730)	(0)	(0)	(0)	(3,362)	(0)	(3)
34	HQ, H&S btry	6-176H	(3.00)	(0.00)	(1,178)	(0)	(340)	(0)	(0)	(0)	(1,518)	(0)	(1)
35	2 FA btry (each)	6-177H	(2.77)	(0.00)	(727)	(0)	(195)	(0)	(0)	(0)	(922)	(0)	(1)
36	DISCOM	29-1H	80.04	0.00	20,869	0	5,095	0	80,010	9,990	105,974	9,990	18
37	HHD	29-2H	(0.90)	(0.00)	(375)	(0)	(105)	(0)	(0)	(0)	(480)	(0)	(1)
38	AG DS co	12-7H	(1.19)	(0.00)	(457)	(0)	(115)	(0)	(0)	(0)	(572)	(0)	(2)
39	Div DPU	29-590H	(1.45)	(0.00)	(257)	(0)	(85)	(0)	(0)	(0)	(342)	(0)	(1)
40	Fin DS co	14-7H	(0.27)	(0.00)	(108)	(0)	(30)	(0)	(0)	(0)	(138)	(0)	(1)
41	Maint bn	29-15H	(45.12)	(0.00)	(10,638)	(0)	(2,300)	(0)	(0)	(0)	(12,938)	(0)	(6)
42	HQ & lt maint co	29-16H	(6.72)	(0.00)	(1,563)	(0)	(455)	(0)	(0)	(0)	(2,018)	(0)	(1)
43	3 fwd spt co (each)	29-17H	(7.58)	(0.00)	(1,898)	(0)	(365)	(0)	(0)	(0)	(2,263)	(0)	(1)
44	Hv maint co	29-18H	(7.98)	(0.00)	(2,180)	(0)	(345)	(0)	(0)	(0)	(2,525)	(0)	(1)
45	Trans acft maint co	55-89H	(7.68)	(0.00)	(1,201)	(0)	(405)	(0)	(0)	(0)	(1,606)	(0)	(1)
46	Med bn	8-35H	(10.05)	(0.00)	(3,725)	(0)	(1,045)	(0)	(0)	(0)	(4,770)	(0)	(4)
47	HQ & spt co	8-36H	(4.11)	(0.00)	(1,529)	(0)	(415)	(0)	(0)	(0)	(1,944)	(0)	(1)
48	3 med co (each)	8-37H	(1.98)	(0.00)	(732)	(0)	(210)	(0)	(0)	(0)	(942)	(0)	(1)
49	S&T bn	29-5H	(21.06)	(0.00)	(5,309)	(0)	(1,415)	(0)	(80,010)	(9,990)	(86,734)	(9,990)	(3)
50	HHC	29-6H	(1.12)	(0.00)	(390)	(0)	(130)	(0)	(0)	(0)	(520)	(0)	(1)
51	S&S co	10-7H	(2.45)	(0.00)	(807)	(0)	(215)	(0)	(0)	(0)	(1,022)	(0)	(1)
52	TMT co	55-88H	(17.49)	(0.00)	(4,112)	(0)	(1,070)	(0)	(80,010)	(9,990)	(85,192)	(9,990)	(1)
53	ADA bn, CHAP/Vulcan, SP	44-325H	49.83	9.45	9,284	1,600	1,860	0	0	0	11,144	1,600	5
54	HHB	44-326H	(2.45)	(1.89)	(948)	(320)	(260)	(0)	(0)	(0)	(1,208)	(320)	(1)
55	2 ADA btry, Vulcan, SP (each).	44-327H	(20.74)	(1.89)	(3,068)	(320)	(530)	(0)	(0)	(0)	(3,598)	(320)	(1)
56	2 ADA btry, CHAP, SP (each).	44-328H	(2.95)	(1.89)	(1,100)	(320)	(270)	(0)	(0)	(0)	(1,370)	(320)	(1)
57	Inf div base total	7H	374.79	46.78	95,587	5,065	21,165	60	100,012	12,487	216,764	17,612	71

Table 5-15. Infantry Division (Mechanized) Base (TOE 37H)—Fuel Data

1	Unit	TOE	Fuel required to travel (gal)		Unit capacity (gal)		Unit gas can capacity (gal)		Bulk fuel (gal)		Total fuel capacity (gal)		Kitchens
			MOGAS	Diesel	MOGAS	Diesel	MOGAS	Diesel	MOGAS	Diesel	MOGAS	Diesel	
2	HHC	37-4H	6.78	0.00	1,835	0	355	0	0	0	2,190	0	1
3	MP co	19-27H	2.16	0.00	1,059	0	315	0	0	0	1,374	0	1
4	Div avn co	37-87H	2.58	0.00	950	0	240	0	0	0	1,190	0	1
5	Sig bn	11-35H	15.18	0.00	5,783	0	1,845	0	0	0	7,628	0	4
6	HHC	11-36H	(2.67)	(0.00)	(984)	(0)	(240)	(0)	(0)	(0)	(1,224)	(0)	(1)
7	Comd op co	11-37H	(4.71)	(0.00)	(1,779)	(0)	(575)	(0)	(0)	(0)	(2,354)	(0)	(1)
8	Fwd comm co	11-38H	(3.54)	(0.00)	(1,401)	(0)	(515)	(0)	(0)	(0)	(1,916)	(0)	(1)
9	Spt op co	11-39H	(4.26)	(0.00)	(1,619)	(0)	(515)	(0)	(0)	(0)	(2,134)	(0)	(1)
10	Engr bn	5-145H	96.17	23.04	12,376	3,000	2,160	160	17,640	4,860	32,176	8,020	6
11	HHC	5-146H	(19.25)	(0.00)	(4,126)	(0)	(580)	(0)	(17,640)	(4,860)	(22,346)	(4,860)	(1)
12	4 cbt engr co (each)	5-147H	(18.27)	(4.36)	(1,686)	(750)	(330)	(40)	(0)	(0)	(2,016)	(790)	(1)
13	Brg co	5-148H	(3.84)	(5.60)	(1,506)	(0)	(260)	(0)	(0)	(0)	(1,766)	(0)	(1)
14	3 bde HHC (each)	37-42H	10.62	1.89	1,515	320	255	0	0	0	1,770	320	1
15	Armd cav sqdn	17-105H	99.48	16.74	13,561	1,600	2,520	0	0	0	16,081	1,600	5
16	HHT	17-106H	(23.69)	(3.78)	(4,136)	(640)	(690)	(0)	(0)	(0)	(4,826)	(640)	(1)
17	3 armd cav trp (each)	17-107H	(24.56)	(4.32)	(2,882)	(320)	(555)	(0)	(0)	(0)	(3,437)	(320)	(1)
18	Air cav trp	17-108H	(2.11)	(0.00)	(779)	(0)	(165)	(0)	(0)	(0)	(944)	(0)	(1)
19	Div arty	6-300H	260.71	123.36	38,736	9,490	6,545	0	0	0	45,281	9,490	25
20	HHB	6-302H	(4.96)	(0.00)	(1,915)	(0)	(545)	(0)	(0)	(0)	(2,460)	(0)	(2)
21	3 FA bn, 155-mm, SP (each)	6-365H	(65.30)	(33.30)	(8,433)	(2,530)	(1,355)	(0)	(0)	(0)	(9,788)	(2,530)	(5)
22	HHB	6-366H	(13.80)	(0.00)	(1,821)	(0)	(315)	(0)	(0)	(0)	(2,136)	(0)	(1)
23	3 FA btry (each)	6-367H	(15.05)	(9.84)	(1,454)	(630)	(230)	(0)	(0)	(0)	(1,684)	(630)	(1)
24	Svc btry	6-369H	(6.35)	(3.78)	(2,250)	(640)	(350)	(0)	(0)	(0)	(2,600)	(640)	(1)
25	FA bn, 8-in., SP	6-395H	(51.31)	(23.46)	(8,890)	(1,900)	(1,205)	(0)	(0)	(0)	(10,095)	(1,900)	(5)
26	HHB	6-396H	(5.33)	(0.00)	(1,105)	(0)	(285)	(0)	(0)	(0)	(1,390)	(0)	(1)
27	3 FA btry (each)	6-397H	(13.37)	(6.56)	(2,081)	(420)	(235)	(0)	(0)	(0)	(2,316)	(420)	(1)
28	Svc btry	6-399H	(5.87)	(3.78)	(1,542)	(640)	(215)	(0)	(0)	(0)	(1,757)	(640)	(1)
29	FA bn, HJ	6-175H	(8.54)	(0.00)	(2,632)	(0)	(730)	(0)	(0)	(0)	(3,362)	(0)	(3)
30	HQ, H&S btry	6-176H	(3.00)	(0.00)	(1,178)	(0)	(340)	(0)	(0)	(0)	(1,518)	(0)	(1)
31	2 FA btry (each)	6-177H	(2.77)	(0.00)	(727)	(0)	(195)	(0)	(0)	(0)	(922)	(0)	(1)
32	DISCOM	29-11H	83.70	0.00	21,617	0	5,195	0	98,000	27,000	124,812	27,000	18
33	HHD	29-2H	(0.90)	(0.00)	(375)	(0)	(105)	(0)	(0)	(0)	(480)	(0)	(1)
34	AG DS co	12-7H	(1.19)	(0.00)	(457)	(0)	(115)	(0)	(0)	(0)	(572)	(0)	(2)
35	Div DPU	29-590H	(1.45)	(0.00)	(257)	(0)	(85)	(0)	(0)	(0)	(342)	(0)	(1)
36	Fin DS co	14-7H	(0.27)	(0.00)	(108)	(0)	(30)	(0)	(0)	(0)	(138)	(0)	(1)
37	Maint bn	29-25H	(47.24)	(0.00)	(11,316)	(0)	(2,330)	(0)	(0)	(0)	(13,646)	(0)	(6)
38	HQ & lt maint co	29-26H	(6.72)	(0.00)	(1,563)	(0)	(455)	(0)	(0)	(0)	(2,018)	(0)	(1)
39	Hv maint co	29-28H	(10.85)	(0.00)	(2,995)	(0)	(420)	(0)	(0)	(0)	(3,415)	(0)	(1)
40	3 fwd spt co (each)	29-27H	(7.58)	(0.00)	(1,898)	(0)	(365)	(0)	(0)	(0)	(2,263)	(0)	(1)
41	Trans acft maint co	55-424H	(6.93)	(0.00)	(1,064)	(0)	(360)	(0)	(0)	(0)	(1,424)	(0)	(1)
42	Med bn	8-35H	(10.05)	(0.00)	(3,725)	(0)	(1,045)	(0)	(0)	(0)	(4,770)	(0)	(4)

Table 5-15. Infantry Division (Mechanized) Base (TOE 37H)—Fuel Data—Continued

1	1 Unit	2 TOE	3 Fuel required to travel 1 km (gal)		4 Unit capacity (gal)		5 Unit gas can capacity (gal)		6 Bulk fuel (gal)		7 Total fuel capacity (gal)		8 Kitchens
			MOGAS	Diesel	MOGAS	Diesel	MOGAS	Diesel	MOGAS	Diesel	MOGAS	Diesel	
43	HQ & spt co	8-36H	(4.11)	(0.00)	(1,529)	(0)	(415)	(0)	(0)	(0)	(1,944)	(0)	(1)
44	3 med co (each)	8-37H	(1.98)	(0.00)	(732)	(0)	(210)	(0)	(0)	(0)	(942)	(0)	(1)
45	S&T bn	29-65H	(22.60)	(0.00)	(5,379)	(0)	(1,485)	(0)	(98,000)	(27,000)	(104,864)	(27,000)	(3)
46	HHC	29-6H	(1.12)	(0.00)	(390)	(0)	(130)	(0)	(0)	(0)	(520)	(0)	(1)
47	S&S co	10-7H	(2.45)	(0.00)	(807)	(0)	(215)	(0)	(0)	(0)	(1,022)	(0)	(1)
48	TMT co	55-84H	(19.03)	(0.00)	(4,182)	(0)	(1,140)	(0)	(98,000)	(27,000)	(103,322)	(27,000)	(1)
49	ADA bn, CHAP/Vulcan, SP	44-325H	49.83	9.45	9,284	1,600	1,860	0	0	0	11,144	1,600	5
50	HHB	44-326H	(2.45)	(1.89)	(948)	(320)	(260)	(0)	(0)	(0)	(1,208)	(320)	(1)
51	2 ADA btry, Vulcan, SP (each).	44-327H	(20.74)	(1.89)	(3,068)	(320)	(530)	(0)	(0)	(0)	(3,598)	(320)	(1)
52	2 ADA btry, CHAP, SP (each).	44-328H	(2.95)	(1.89)	(1,000)	(320)	(270)	(0)	(0)	(0)	(1,370)	(320)	(1)
53	Inf div (mech) base total	37H	648.45	178.26	109,746	16,650	21,800	160	115,640	31,860	247,186	48,670	69

Table 5-16. Airborne Division Base (TOE 57G)—Fuel Data

1	1 Unit	2 TOE	3 Fuel required to travel (gal)		4 Unit capacity (gal)		5 Unit gas can capacity (gal)		6 Bulk fuel (gal)		7 Total fuel capacity (gal)		8 Kitchens
			MOGAS	Diesel	MOGAS	Diesel	MOGAS	Diesel	MOGAS	Diesel	MOGAS	Diesel	
2	HHC	57-4G	1.53	0.00	708	0	250	0	0	0	958	0	1
3	Cbt avn bn	1-55G	4.29	0.00	1,619	0	495	0	0	0	2,114	0	3
4	HHC	1-56G	(1.50)	(0.00)	(608)	(0)	(210)	(0)	(0)	(0)	(818)	(0)	(1)
5	Aslt hel co	1-57G	(1.65)	(0.00)	(585)	(0)	(155)	(0)	(0)	(0)	(740)	(0)	(1)
6	Avn GS co	1-58G	(1.14)	(0.00)	(426)	(0)	(130)	(0)	(0)	(0)	(556)	(0)	(1)
7	Engr bn	5-25G	9.80	0.00	5,734	0	1,310	0	0	0	7,044	0	4
8	HHC	5-26G	(4.01)	(0.00)	(1,684)	(0)	(440)	(0)	(0)	(0)	(2,124)	(0)	(1)
9	3 engr co (each)	5-27G	(1.93)	(0.00)	(1,350)	(0)	(290)	(0)	(0)	(0)	(1,640)	(0)	(1)
10	Div arty	6-200G	20.37	0.00	10,095	0	2,995	0	0	0	13,090	0	13
11	HHB	6-201G	(2.55)	(0.00)	(1,113)	(0)	(385)	(0)	(0)	(0)	(1,498)	(0)	(1)
12	3 FA bn, 105-mm, towed (each)	6-215H	(5.94)	(0.00)	(2,994)	(0)	(870)	(0)	(0)	(0)	(3,864)	(0)	(4)
13	HQ, H&S btry	6-216H	(2.73)	(0.00)	(1,266)	(0)	(360)	(0)	(0)	(0)	(1,626)	(0)	(1)
14	3 FA btry (each)	6-217H	(1.07)	(0.00)	(576)	(0)	(170)	(0)	(0)	(0)	(746)	(0)	(1)
15	DISCOM	29-51G	20.06	0.00	7,038	0	2,510	0	0	0	9,548	0	14
16	HHC & band	29-52G	(0.54)	(0.00)	(251)	(0)	(75)	(0)	(0)	(0)	(326)	(0)	(1)

17	Med bn	8-65G	(5.64)	(0.00)	(2,574)	(0)	(1,060)	(0)	(0)	(0)	(3,634)	(0)	(4)
18	HQ & spt co	8-66G	(1.77)	(0.00)	(795)	(0)	(325)	(0)	(0)	(0)	(1,120)	(0)	(1)
19	3 med co (each)	8-67G	(1.29)	(0.00)	(593)	(0)	(245)	(0)	(0)	(0)	(838)	(0)	(1)
20	Sup co	10-37G	(1.18)	(0.00)	(445)	(0)	(135)	(0)	(0)	(0)	(580)	(0)	(1)
21	QM air equip spt co	10-337G	(1.92)	(0.00)	(489)	(0)	(135)	(0)	(0)	(0)	(624)	(0)	(2)
22	Admin co	12-157G	(3.77)	(0.00)	(921)	(0)	(305)	(0)	(0)	(0)	(1,226)	(0)	(2)
23	Maint bn	29-55G	(7.01)	(0.00)	(2,356)	(0)	(800)	(0)	(0)	(0)	(3,158)	(0)	(4)
24	HHD	29-56G	(0.21)	(0.00)	(99)	(0)	(35)	(0)	(0)	(0)	(134)	(0)	(1)
25	Gnd maint co	29-57G	(3.18)	(0.00)	(1,444)	(0)	(500)	(0)	(0)	(0)	(1,944)	(0)	(2)
26	Trans acft maint co	55-99G	(3.62)	(0.00)	(815)	(0)	(265)	(0)	(0)	(0)	(1,080)	(0)	(1)
27	Sig bn	11-215G	6.19	0.00	2,916	0	980	0	0	0	3,896	0	4
28	HHC	11-216G	(1.30)	(0.00)	(493)	(0)	(155)	(0)	(0)	(0)	(648)	(0)	(1)
29	Comd op co	11-217G	(2.40)	(0.00)	(1,272)	(0)	(410)	(0)	(0)	(0)	(1,682)	(0)	(2)
30	Spt op co	11-218G	(2.49)	(0.00)	(1,151)	(0)	(415)	(0)	(0)	(0)	(1,566)	(0)	(1)
31	Armd cav sqdn	17-75G	7.77	0.00	3,501	0	1,135	0	0	0	4,636	0	4
32	HHT	17-76G	(3.52)	(0.00)	(1,494)	(0)	(480)	(0)	(0)	(0)	(1,974)	(0)	(1)
33	2 armd cav trp (each)	17-77G	(1.32)	(0.00)	(706)	(0)	(250)	(0)	(0)	(0)	(956)	(0)	(1)
34	Air cav trp	17-78G	(1.61)	(0.00)	(595)	(0)	(155)	(0)	(0)	(0)	(750)	(0)	(1)
35	3 bde HHC (each)	57-42G	1.39	0.00	882	0	230	0	0	0	1,112	0	1
36	MP co	19-67G	1.02	0.00	558	0	170	0	0	0	728	0	1
37	ADA bn, CHAP/Vulcan, towed*.	44-425T											
38	HHB*	44-426T											
39	2 ADA btry, Vulcan, towed (each)*.	44-427T											
40	Abn div base total	57G	75.20	0.00	34,815	0	10,535	0	0	0	45,350	0	47

*Fuel data on this unit are not available.

and tactical air force requirements are added to the field army requirements, the estimated total theater average may be increased to 6,000,000 gallons per day to support a 12-division field army and to 4,000,000 gallons per day to support an eight-division field army. The petroleum system must provide for the reception, storage, maintenance, and distribution and issue of the types and quantities of fuels that these requirements represent. To satisfy this demand, six 8-inch pipelines, or two per corps, are required to support a 12-division force.

Note. In tables 5–13 through 5–18, subordinate unit totals and subtotals are shown in parentheses.

Section III. CLASS V SUPPLY

5–8. Ammunition Service

a. Ammunition service encompasses the supply of conventional and special ammunition; the supply of class V, VII, and IX items peculiar to ammunition and missile systems; and the maintenance of conventional and special ammunition and guided-missile systems. Ammunition service also includes the specialized services closely associated with ammunition, e.g., escort, calibration, and disposal. The scope of ammunition service will vary widely with the type of conflict and with the operational environment in which U.S. forces fight. In peacetime, ammunition service is primarily a maintenance function. During wartime, the tactical arms must fight for protracted periods with the ammunition that is already in the theater of operations at the beginning of hostilities. The capability to fight is related directly to the adequacy of planning ammunition stockage levels and the serviceability of these stocks at the beginning of hostilities.

b. Subsequent paragraphs cover the interrelationship of ammunition service and tactics, the factors that govern the establishment and adjustment of ammunition supply levels, and basic information on ammunition supply and maintenance procedures. This information should provide an insight into ammunition service and promote understanding among tactical and ammunition service commanders.

c. Tables in this section contain logistic planning data for conventional ammunition pertaining to—

(1) Combat vehicle ammunition data (table 5–20).

(2) Estimated expenditures of ammunition.

(*a*) Ammunition per weapon per day, expressed in rounds (table 5–21).

(*b*) Ammunition per type of unit per day, expressed in short tons (STON) (table 5–22).

(3) Field artillery ammunition expenditures.

(*a*) Expenditures in rounds per weapon per hour (table 5–23).

(*b*) Expenditures in STON per battalion per hour (table 5–24).

(*c*) Vietnam expenditures in rounds per weapon per day (tables 5–25 and 5–26).

(4) Basic load.

(*a*) Ammunition basic load guide (table 5–27).

(*b*) Basic load of ammunition—example for an infantry unit (table 5–28).

(*c*) Basic load of ammunition—example for an artillery unit (table 5–29).

(*d*) Above examples are computed by applying the basic load guide (table 5–27) and the weights of ammunition to the weapon densities appropriate to each table of organization and equipment (TOE) unit.

d. FM 101–10–3 contains logistic data on special ammunition. FM 9–6 contains details on supply, maintenance, and other aspects of ammunition services. SB 3–39 contains data on basic loads of chemical nontoxic ammunition.

e. SB 38–26 contains details on estimated *average* quantity of ammunition required per day to sustain operations in an active combat theater. AR 11–11 contains details on days of supply authorized oversea commands. These references, together with personnel and weapon densities, establish the level of ammunition reserves authorized during the prehostilities phase. Insofar as these reserves reflect a level of available assets, they constitute the upper limit of planned expenditures in the initial phases of conflict, at least until resupply can be accomplished. For tactical planning, the consumption rates (expenditures) in paragraphs 5–15 and 5–16 should be used.

Table 5-17. Airmobile Division Base (TOE 67T)—Fuel Data

1	Unit	TOE	3	4	5	6	7	8	9	10	11	12	13
			Fuel required to travel 1 km (gal)		Unit capacity (gal)		Unit gas can capacity (gal)		Bulk fuel (gal)		Total fuel capacity (gal)		Kitchens
			MOGAS	Diesel	MOGAS	Diesel	MOGAS	Diesel	MOGAS	Diesel	MOGAS	Diesel	
2	HHC	67-2T	1.77	0.00	778	0	250	0	0	0	1,028	0	1
3	MP co	19-87T	1.14	0.00	778	0	200	0	0	0	978	0	1
4	Cbt avn gp	1-100T	18.65	0.00	9,072	0	2,470	0	0	0	11,542	0	16
5	HHC	1-101T	(2.07)	(0.00)	(893)	(0)	(315)	(0)	(0)	(0)	(1,208)	(0)	(1)
6	Avn GS co	1-102T	(2.53)	(0.00)	(959)	(0)	(255)	(0)	(0)	(0)	(1,214)	(0)	(1)
7	2 aslt hel bn (each)	1-155T	(6.01)	(0.00)	(3,152)	(0)	(820)	(0)	(0)	(0)	(3,972)	(0)	(5)
8	HHC	1-156T	(1.35)	(0.00)	(548)	(0)	(170)	(0)	(0)	(0)	(718)	(0)	(1)
9	Atk hel co	1-157T	(1.30)	(0.00)	(705)	(0)	(185)	(0)	(0)	(0)	(890)	(0)	(1)
10	3 aslt hel co (each)	1-158T	(1.12)	(0.00)	(633)	(0)	(155)	(0)	(0)	(0)	(788)	(0)	(1)
11	Aslt spt hel bn	1-165T	(2.03)	(0.00)	(916)	(0)	(260)	(0)	(0)	(0)	(1,176)	(0)	(4)
12	HHC	1-166T	(0.77)	(0.00)	(337)	(0)	(95)	(0)	(0)	(0)	(432)	(0)	(1)
13	3 aslt spt hel co (each)	1-167T	(0.42)	(0.00)	(193)	(0)	(55)	(0)	(0)	(0)	(248)	(0)	(1)
14	Sig bn	11-205T	2.67	0.00	1,443	0	445	0	0	0	1,888	0	3
15	HQ, H&S co	11-206T	(0.60)	(0.00)	(270)	(0)	(100)	(0)	(0)	(0)	(370)	(0)	(1)
16	Comd op co	11-207T	(2.07)	(0.00)	(1,173)	(0)	(345)	(0)	(0)	(0)	(1,518)	(0)	(2)
17	Engr bn	5-215T	6.46	0.00	1,717	0	905	0	0	0	2,622	0	5
18	HHC	5-216T	(4.30)	(0.00)	(1,513)	(0)	(545)	(0)	(0)	(0)	(2,058)	(0)	(2)
19	3 engr co (each)	5-217T	(0.72)	(0.00)	(68)	(0)	(120)	(0)	(0)	(0)	(188)	(0)	(1)
20	3 bde HHC (each)	67-42T	1.36	0.00	1,011	0	235	0	0	0	1,246	0	1
21	Cav sqdn	17-95T	6.51	0.00	3,423	0	945	0	0	0	4,368	0	5
22	HHT	17-96T	(3.75)	(0.00)	(1,737)	(0)	(435)	(0)	(0)	(0)	(2,172)	(0)	(1)
23	3 air cav trp (each)	17-98T	(0.44)	(0.00)	(324)	(0)	(80)	(0)	(0)	(0)	(404)	(0)	(1)
24	Cav trp	17-99T	(1.44)	(0.00)	(714)	(0)	(270)	(0)	(0)	(0)	(984)	(0)	(1)
25	Div arty	6-700T	10.89	0.00	6,310	0	1,620	0	0	0	7,930	0	18
26	HHB	6-701T	(1.17)	(0.00)	(912)	(0)	(200)	(0)	(0)	(0)	(1,112)	(0)	(1)
27	Avn btry	6-702T	(0.90)	(0.00)	(496)	(0)	(130)	(0)	(0)	(0)	(626)	(0)	(1)
28	3 FA bn, 105-mm, towed (each).	6-705T	(1.80)	(0.00)	(1,184)	(0)	(290)	(0)	(0)	(0)	(1,474)	(0)	(4)
29	HQ, H&S btry	6-706T	(1.50)	(0.00)	(842)	(0)	(230)	(0)	(0)	(0)	(1,072)	(0)	(1)
30	3 FA btry (each)	6-707T	(0.10)	(0.00)	(114)	(0)	(20)	(0)	(0)	(0)	(134)	(0)	(1)
31	FA bn, aerial FA	6-725T	(3.42)	(0.00)	(1,350)	(0)	(420)	(0)	(0)	(0)	(1,770)	(0)	(4)
32	HQ, H&S btry	6-726T	(0.78)	(0.00)	(315)	(0)	(105)	(0)	(0)	(0)	(420)	(0)	(1)
33	3 aerial FA btry (each)	6-727T	(0.88)	(0.00)	(345)	(0)	(105)	(0)	(0)	(0)	(450)	(0)	(1)
34	DISCOM	29-41T	21.91	0.00	13,751	0	3,165	0	200,000	0	216,916	0	25
35	HHC & band	29-42T	(0.78)	(0.00)	(357)	(0)	(115)	(0)	(0)	(0)	(472)	(0)	(1)
36	Admin co	12-77T	(0.90)	(0.00)	(375)	(0)	(105)	(0)	(0)	(0)	(480)	(0)	(3)
37	Sup bn	29-95T	(7.96)	(0.00)	(2,776)	(0)	(700)	(0)	(200,000)	(0)	(203,476)	(0)	(4)
38	HQ, H&S co	29-96T	(3.81)	(0.00)	(1,339)	(0)	(305)	(0)	(0)	(0)	(1,644)	(0)	(1)
39	Sup co	29-97T	(1.02)	(0.00)	(428)	(0)	(170)	(0)	(200,000)	(0)	(200,598)	(0)	(2)
40	QM aerial equip spt co	10-67T	(3.13)	(0.00)	(1,009)	(0)	(225)	(0)	(0)	(0)	(1,234)	(0)	(1)

Table 5-17. Airmobile Division Base (TOE 67T)—Fuel Data—Continued

1	Unit	TOE	Fuel required to travel (gal)		Unit capacity (gal)		Unit gas can capacity (gal)		Bulk fuel (gal)		Total fuel capacity (gal)		Kitchens
			MOGAS	Diesel	MOGAS	Diesel	MOGAS	Diesel	MOGAS	Diesel	MOGAS	Diesel	
41	Trans acft maint and sup bn	55-405T	(6.14)	(0.00)	(4,490)	(0)	(1,070)	(0)	(0)	(0)	(5,560)	(0)	(9)
42	HHC	55-406T	(0.54)	(0.00)	(246)	(0)	(90)	(0)	(0)	(0)	(336)	(0)	(1)
43	4 trans acft maint and sup co (each).	55-407T	(1.40)	(0.00)	(1,061)	(0)	(245)	(0)	(0)	(0)	(1,306)	(0)	(2)
44	Med bn	8-25T	(3.04)	(0.00)	(3,664)	(0)	(630)	(0)	(0)	(0)	(4,294)	(0)	(4)
45	HQ & spt co	8-26T	(1.33)	(0.00)	(631)	(0)	(225)	(0)	(0)	(0)	(856)	(0)	(1)
46	3 med co (each)	8-27T	(0.57)	(0.00)	(1,011)	(0)	(135)	(0)	(0)	(0)	(1,146)	(0)	(1)
47	Maint bn	29-85T	(3.09)	(0.00)	(2,089)	(0)	(545)	(0)	(0)	(0)	(2,634)	(0)	(4)
48	HQ & maint spt co	29-86T	(1.71)	(0.00)	(739)	(0)	(245)	(0)	(0)	(0)	(984)	(0)	(1)
49	3 fwd spt det (each)	29-87T	(0.46)	(0.00)	(450)	(0)	(100)	(0)	(0)	(0)	(550)	(0)	(1)
50	Ambl div base total	67T	74.08	0.00	40,305	0	10,705	0	200,000	0	251,010	0	77

Table 5-18. Combat Units—Fuel Data

1	Unit	TOE	Fuel required to travel 1 km (gal)		Unit capacity (gal)		Unit gas can capacity (gal)		Bulk fuel (gal)		Total fuel capacity (gal)		Kitchens
			MOGAS	Diesel	MOGAS	Diesel	MOGAS	Diesel	MOGAS	Diesel	MOGAS	Diesel	
	Sep bde base												
	Sep armd bde:												
2	HHC	17-102G	13.73	0.00	2,729	0	605	0	0	0	3,334	0	2
3	Armd cav trp	17-107G	23.96	1.89	3,705	328	675	0	0	0	4,380	320	1
4	Engr co	5-127G	20.19	7.16	2,512	750	450	40	0	0	2,962	790	2
5	Spt bn	29-75G	26.25	0.00	7,011	0	1,810	0	41,940	3,060	50,761	3,060	6
6	HHD	29-76G	(1.11)	(0.00)	(479)	(0)	(155)	(0)	(0)	(0)	(634)	(0)	(1)
7	Admin co	12-177G	(0.67)	(0.00)	(276)	(0)	(70)	(0)	(0)	(0)	(346)	(0)	(1)
8	Med co	8-147G	(3.06)	(0.00)	(1,139)	(0)	(345)	(0)	(0)	(0)	(1,484)	(0)	(1)
9	S&T co	29-77G	(10.08)	(0.00)	(2,223)	(0)	(635)	(0)	(41,940)	(3,060)	(44,798)	(3,060)	(1)
10	Maint co	29-79G	(11.33)	(0.00)	(2,894)	(0)	(605)	(0)	(0)	(0)	(3,499)	(0)	(2)
11	FA bn, 155-mm, SP	6-375G	66.51	1.89	8,855	320	1,455	0	0	0	10,310	320	5
12	HHB	6-376G	(14.56)	(0.00)	(2,093)	(0)	(385)	(0)	(0)	(0)	(2,478)	(0)	(1)
13	3 FA btry (each)	6-367G	(15.05)	(0.00)	(1,454)	(0)	(230)	(0)	(0)	(0)	(1,684)	(0)	(1)
14	Svc btry	6-369G	(6.80)	(1.89)	(2,400)	(320)	(380)	(0)	(0)	(0)	(2,780)	(320)	(1)
15	Total	17-100G	150.64	10.94	24,812	1,390	4,995	40	41,940	3,060	71,747	4,490	16
	Sep inf bde:												
16	HHC	7-102G	4.57	0.00	2,000	0	600	0	0	0	2,600	0	2

17	Armd cav trp	17-107G	23.96	1.89	3,705	320	675	0	0	0	4,380	320	1
18	Avn co	1-47G	2.53	0.00	938	0	220	0	0	0	1,158	0	1
19	Engr co	5-107G	5.78	7.16	2,676	750	340	40	0	0	3,016	790	2
20	Spt bn	29-135G	27.63	0.00	7,304	0	1,925	0	40,275	4,725	49,504	4,725	6
21	HHD	29-76G	(1.11)	(0.00)	(479)	(0)	(155)	(0)	(0)	(0)	(634)	(0)	(1)
22	Admin co	12-177G	(0.67)	(0.00)	(276)	(0)	(70)	(0)	(0)	(0)	(346)	(0)	(1)
23	Med co	8-147G	(3.06)	(0.00)	(1,139)	(0)	(345)	(0)	(0)	(0)	(1,484)	(0)	(1)
24	S&T co	29-77G	(10.08)	(0.00)	(2,223)	(0)	(635)	(0)	(40,275)	(4,725)	(43,133)	(4,725)	(1)
25	Maint co	29-99G	(12.71)	(0.00)	(3,187)	(0)	(720)	(0)	(0)	(0)	(3,907)	(0)	(2)
26	FA bn, 105-mm, towed	6-185G	12.89	0.00	4,725	0	1,185	0	0	0	5,910	0	4
27	HQ, H&S btry	6-186G	(5.87)	(0.00)	(2,232)	(0)	(600)	(0)	(0)	(0)	(2,832)	(0)	(1)
28	3 FA btry (each)	6-157G	(2.34)	(0.00)	(831)	(0)	(195)	(0)	(0)	(0)	(1,026)	(0)	(1)
29	Total	7-100G	77.36	9.05	21,348	1,070	4,945	40	40,275	4,725	66,568	5,835	16
	Sep inf bde (mech):												
30	HHC	37-102G	13.76	0.00	2,746	0	610	0	0	0	3,356	0	2
31	Armd cav trp	17-107G	23.87	1.89	3,705	320	675	0	0	0	4,380	320	1
32	Engr co	5-127G	20.19	7.16	2,512	750	450	40	0	0	2,962	790	2
33	Spt bn	29-75G	26.25	0.00	7,011	0	1,810	0	41,940	3,060	50,761	3,060	6
34	HHD	29-76G	(1.11)	(0.00)	(479)	(0)	(155)	(0)	(0)	(0)	(634)	(0)	(1)
35	Admin co	12-177G	(0.67)	(0.00)	(276)	(0)	(70)	(0)	(0)	(0)	(346)	(0)	(1)
36	Med co	8-147G	(3.06)	(0.00)	(1,139)	(0)	(345)	(0)	(0)	(0)	(1,484)	(0)	(1)
37	S&T co	29-77G	(10.08)	(0.00)	(2,223)	(0)	(635)	(0)	(41,940)	(3,060)	(44,798)	(3,060)	(1)
38	Maint co	29-79G	(11.33)	(0.00)	(2,894)	(0)	(605)	(0)	(0)	(0)	(3,499)	(0)	(2)
39	FA bn, 155-mm, SP	6-375G	66.51	1.89	8,855	320	1,455	0	0	0	10,310	320	5
40	HHB	6-376G	(14.56)	(0.00)	(2,093)	(0)	(385)	(0)	(0)	(0)	(2,478)	(0)	(1)
41	3 FA btry (each)	6-367G	(15.05)	(0.00)	(1,454)	(0)	(230)	(0)	(0)	(0)	(1,684)	(0)	(1)
42	Svc btry	6-369G	(6.80)	(1.89)	(2,400)	(320)	(380)	(0)	(0)	(0)	(2,780)	(320)	(1)
43	Total	37-100G	150.58	10.94	24,829	1,390	5,000	40	41,940	3,060	71,769	4,490	16
	Sep abn bde:												
44	HHC	57-102G	2.91	0.00	1,562	0	460	0	0	0	2,022	0	2
45	Armd cav trp	17-127G	1.56	3.51	739	320	215	0	0	0	954	320	1
46	Engr co	5-137G	2.32	0.00	1,510	0	320	0	0	0	1,830	0	1
47	Spt bn	29-105G	7.01	0.00	2,827	0	955	0	0	0	3,782	0	5
48	HHD	29-106G	(0.51)	(0.00)	(249)	(0)	(85)	(0)	(0)	(0)	(334)	(0)	(1)
49	Admin co	12-167G	(0.57)	(0.00)	(238)	(0)	(80)	(0)	(0)	(0)	(318)	(0)	(1)
50	Med co	8-167G	(1.32)	(0.00)	(595)	(0)	(235)	(0)	(0)	(0)	(830)	(0)	(1)
51	S&S co	29-107G	(2.68)	(0.00)	(909)	(0)	(255)	(0)	(0)	(0)	(1,164)	(0)	(1)
52	Maint co	29-109G	(1.93)	(0.00)	(836)	(0)	(300)	(0)	(0)	(0)	(1,136)	(0)	(1)
53	FA bn, 105-mm, towed	6-215G	5.94	0.00	2,994	0	870	0	0	0	3,864	0	4
54	HQ, H&S btry	6-216G	(2.73)	(0.00)	(1,266)	(0)	(360)	(0)	(0)	(0)	(1,626)	(0)	(1)
55	3 FA brty (each)	6-217G	(1.07)	(0.00)	(576)	(0)	(170)	(0)	(0)	(0)	(746)	(0)	(1)
56	Total	57-100G	19.74	3.51	9,632	320	2,820	0	0	0	12,452	320	13
	Sep lt inf bde:												
57	HHC	77-102G	3.25	0.00	1,485	0	485	0	0	0	1,970	0	2
58	Armd cav trp	17-117G	1.71	3.51	794	320	240	0	0	0	1,034	320	1
59	Engr co	5-207G	3.80	0.00	1,539	0	285	0	3,816	684	5,640	684	1
60	Spt bn	29-245G	8.46	1.89	3,271	320	955	0	0	0	4,226	320	5
61	HHD	29-246G	(0.48)	(0.00)	(242)	(0)	(80)	(0)	(0)	(0)	(322)	(0)	(1)
62	Admin co	12-197G	(0.57)	(0.00)	(238)	(0)	(80)	(0)	(0)	(0)	(318)	(0)	(1)

Table 5-18. Combat Units—Fuel Data—Continued

1	Unit	TOE	Fuel required to travel (gal)		Unit capacity (gal)		Unit gas can capacity (gal)		Bulk fuel (gal)		Total fuel capacity (gal)		Kitchens
			MOGAS	Diesel	MOGAS	Diesel	MOGAS	Diesel	MOGAS	Diesel	MOGAS	Diesel	
63	Maint and sup co	29-247G	(6.18)	(1.89)	(2,222)	(320)	(560)	(0)	(0)	(0)	(2,782)	(320)	(2)
64	Med co	8-197G	(1.23)	(0.00)	(569)	(0)	(235)	(0)	(0)	(0)	(804)	(0)	(1)
65	FA bn, 105-mm, towed	6-115G	13.13	0.00	4,877	0	1,285	0	0	0	6,162	0	4
66	HQ, H&S btry	6-116G	(4.67)	(0.00)	(1,793)	(0)	(505)	(0)	(0)	(0)	(2,298)	(0)	(1)
67	3 FA btry (each)	6-117G	(2.82)	(0.00)	(1,028)	(0)	(260)	(0)	(0)	(0)	(1,288)	(0)	(1)
68	Total	77-100G	30.35	5.40	11,966	640	3,250	0	3,816	684	19,032	1,324	13
	Inf units												
	Inf bn, sep inf bde:												
69	HHC	7-16G	4.75	0.00	1,836	0	500	0	0	0	2,336	0	1
70	3 rifle co (each)	7-18G	0.42	0.00	173	0	55	0	0	0	228	0	1
71	Cbt spt co	7-28G	1.74	0.00	870	0	300	0	0	0	1,170	0	1
72	Total	7-15G	7.75	0.00	3,225	0	965	0	0	0	4,190	0	5
	Inf bn, inf div:												
73	HHC	7-16H	4.75	0.00	1,836	0	500	0	0	0	2,336	0	1
74	3 rifle co (each)	7-18H	0.42	0.00	173	0	55	0	0	0	228	0	1
75	Cbt spt co	7-28H	1.65	0.00	819	0	285	0	0	0	1,104	0	1
76	Total	7-15H	7.66	0.00	3,174	0	950	0	0	0	4,124	0	5
	Inf bn, abn div and sep abn bde:												
77	HHC	7-36G	3.89	0.00	2,949	0	625	0	2,000	0	5,574	0	2
78	3 rifle co (each)	7-37G	0.34	0.00	594	0	80	0	0	0	674	0	1
79	Total	7-35G	4.91	0.00	4,731	0	865	0	2,000	0	7,596	0	5
	Inf bn (mech), sep armd and inf (mech) bde:												
80	HHC	7-46G	21.16	3.78	3,215	640	505	0	0	0	3,720	640	1
81	3 rifle co (each)	7-47G	23.73	2.61	1,388	731	340	60	0	0	1,720	791	1
82	Cbt spt co	7-48G	17.53	1.89	2,535	320	525	0	0	0	3,060	320	1
83	Total	7-45G	109.88	13.50	9,914	3,153	2,050	180	0	0	11,964	3,333	5
	Inf bn (mech), armd, inf, and inf (mech) div:												
84	HHC	7-46H	21.16	3.78	3,215	640	505	0	0	0	3,720	640	1
85	3 rifle co (each)	7-47H	23.73	2.61	1,388	731	340	60	0	0	1,728	791	1
86	Cbt spt co	7-48H	17.47	1.89	2,501	320	515	0	0	0	3,016	320	1
87	Total	7-45H	109.82	13.50	9,880	3,153	2,040	180	0	0	11,920	3,333	5
	Inf bn, ambl div:												
88	HHC	7-56T	0.56	0.00	756	0	120	0	0	0	876	0	1

89	3 rifle co (each)	7–57T	0.08	0.00	160	0	20	0	0	0	180	0	1
90	Cbt spt co	7–58T	0.47	0.00	577	0	135	0	0	0	712	0	1
91	Total	7–55T	1.27	0.00	1,813	0	315	0	0	0	2,128	0	5
92	Abn inf ranger co	7–157G	2.34	0.00	856	0	210	0	0	0	1,066	0	1
	Inf bn, sep lt inf bde:												
93	HHC	7–176G	1.56	0.00	580	0	150	0	0	0	730	0	1
94	3 rifle co (each)	7–177G	0.15	0.00	85	0	25	0	0	0	110	0	1
95	Cbt spt co	7–178G	1.07	0.00	492	0	210	0	0	0	702	0	1
96	Total	7–175G	3.08	0.00	1,327	0	435	0	0	0	1,762	0	5
	Armor units												
	Tk bn, sep armd, inf, and inf (mech) bde:												
97	HHC	17–36G	45.98	7.63	6,591	1,125	995	60	0	0	7,586	1,185	2
98	3 tk co (each)	17–37G	4.87	27.37	700	6,375	75	340	0	0	775	6,715	1
99	Total	17–35G	60.59	89.74	8,691	20,250	1,220	1,080	0	0	9,911	21,330	5
	Tk bn, armd, inf, and inf (mech) div:												
100	HHC	17–36H	30.65	7.63	3,399	1,125	565	60	0	0	3,964	1,185	1
101	3 tk co (each)	17–37H	4.87	27.37	700	6,375	75	340	0	0	775	6,715	1
102	Svc spt co	17–39H	17.88	1.89	3,827	320	535	0	0	0	4,362	320	1
103	Total	17–35H	63.14	91.63	9,326	20,570	1,325	1,080	0	0	10,651	21,650	5
	Armd cav regt:												
104	HHT	17–52G	16.58	1.89	2,268	320	410	0	0	0	2,976	320	1
105	Air cav trp	17–58G	2.38	0.00	872	0	180	0	0	0	1,052	0	1
106	3 armd cav sqdn (each)	17–55G	113.81	56.26	15,238	8,285	2,630	340	0	0	17,868	8,625	7
107	HHT	17–56G	(31.41)	(6.09)	(5,278)	(320)	(815)	(0)	(0)	(0)	(6,093)	(320)	(2)
108	3 armd cav trp (each)	17–57G	(19.71)	(4.32)	(2,535)	(320)	(485)	(0)	(0)	(0)	(3,020)	(320)	(1)
109	Tk co	17–27G	(8.13)	(27.37)	(860)	(6,375)	(115)	(340)	(0)	(0)	(975)	(6,715)	(1)
110	FA btry, 155-mm, SP	6–37G	(15.14)	(9.84)	(1,495)	(630)	(245)	(0)	(0)	(0)	(1,740)	(630)	(1)
111	Total	17–51G	360.39	170.67	48,854	25,175	8,480	1,020	0	0	57,334	26,195	23

Table 5–19. Combat Support Units—Fuel Data

1	1 Unit	2 TOE	3 Fuel required to travel 1 km (gal) MOGAS	4 Fuel required to travel 1 km (gal) Diesel	5 Unit capacity (gal) MOGAS	6 Unit capacity (gal) Diesel	7 Unit gas can capacity (gal) MOGAS	8 Unit gas can capacity (gal) Diesel	9 Bulk fuel (gal) MOGAS	10 Bulk fuel (gal) Diesel	11 Total fuel capacity (gal) MOGAS	12 Total fuel capacity (gal) Diesel	13 Kitchens
	FA units												
2	HHB, FA gp	6–401G	2.59	0.00	1,049	0	345	0	0	0	1,394	0	1
	FA bn, 155-mm, towed:												
3	HHB	6–426G	2.14	0.00	894	0	300	0	0	0	1,194	0	1
4	3 FA btry (each)	6–427G	2.98	0.00	1,077	0	185	0	0	0	1,262	0	1
5	Svc btry	6–429G	4.04	0.00	1,431	0	255	0	0	0	1,686	0	1
6	Total	6–425G	15.12	0.00	5,556	0	1,110	0	0	0	6,666	0	5
	FA bn, 175-mm, SP:												
7	HHB	6–436G	2.41	0.00	1,007	0	345	0	0	0	1,352	0	1
8	3 FA btry (each)	6–437G	3.27	14.68	722	1,620	120	0	0	0	842	1,620	1
9	Svc btry	6–439G	4.11	1.89	1,459	320	255	0	0	0	1,714	320	1
10	Total	6–435G	16.33	45.93	4,632	5,180	960	0	0	0	5,592	5,180	5
	FA bn, 8-in, SP:												
11	HHB	6–416G	2.53	0.00	1,055	0	365	0	0	0	1,420	0	1
12	3 FA btry (each)	6–447G	13.27	6.56	2,046	420	230	0	0	0	2,276	420	1
13	Svc btry	6–449G	6.24	0.00	1,670	0	235	0	0	0	1,905	0	1
14	Total	6–445G	48.58	19.68	8,863	1,260	1,290	0	0	0	10,153	1,260	5
	FA bn, 155-mm, SP:												
15	HHB	6–456G	5.32	0.00	1,101	0	295	0	0	0	1,396	0	1
16	3 FA btry (each)	6–457G	14.36	9.84	1,203	630	195	0	0	0	1,398	630	1
17	Svc btry	6–459G	3.76	1.89	1,329	320	235	0	0	0	1,564	320	1
18	Total	6–455G	52.16	31.41	6,039	2,210	1,115	0	0	0	7,154	2,210	5
19	HHB, corps arty	6–501G	4.60	0.00	1,782	0	550	0	0	0	2,332	0	1
20	HHB, abn corps arty	6–502G	3.34	0.00	1,339	0	465	0	0	0	1,804	0	1
	FA bn, HJ:												
21	HQ, H&S btry	6–526G	3.61	0.00	1,402	0	400	0	0	0	1,802	0	1
22	3 FA btry (each)	6–527G	2.76	0.00	692	0	190	0	0	0	882	0	1
23	Total	6–525G	11.89	0.00	3,478	0	970	0	0	0	4,448	0	4
	FA bn, SGT:												
24	HQ, H&S btry	6–556G	7.30	0.00	2,491	0	695	0	0	0	3,186	0	3
25	2 FA btry (each)	6–557G	3.40	0.00	1,358	0	280	0	0	0	1,638	0	1
26	Total	6–555G	14.10	0.00	5,207	0	1,255	0	0	0	6,462	0	1
27	FA btry, slt	6–558G	2.88	0.00	1,237	0	435	0	0	0	1,672	0	1
	FATAB:												
28	HHB	6–576G	4.73	0.00	1,779	0	485	0	0	0	2,264	0	1
29	3 FA btry (each)	6–577G	3.77	0.00	1,508	0	450	0	0	0	1,958	0	1
30	Total	6–575G	16.04	0.00	6,303	0	1,835	0	0	0	8,138	0	4
	FA bn, PSG:												
31	HHB	6–616G	5.51	0.00	2,244	0	460	0	0	0	2,704	0	1
32	4 FA btry (each)	6–617G	12.20	0.00	4,777	0	825	0	0	0	5,602	0	2

33	Svc btry	6–619G	13.26	0.00	5,110	0	910	0	0	0	6,020	0	2
34	Total	6–615G	67.57	0.00	26,462	0	4,670	0	0	0	31,132	0	11
	ADA units												
35	HHB, ADA bde	44–2G	2.01	0.00	734	0	170	0	0	0	904	0	1
36	ADA tgt det	44–8G	0.43	0.00	165	0	45	0	0	0	210	0	1
37	HHB, ADA gp	44–12G	2.20	0.00	871	0	205	0	0	0	1,076	0	1
	ADA AW bn, SP:												
38	HHB	44–86G	3.62	1.89	1,313	320	285	0	0	0	1,598	320	1
39	4 ADA btry (each)	44–87G	33.16	0.00	2,954	0	470	0	0	0	3,424	0	1
40	Total	44–85G	136.26	1.89	13,129	320	2,165	0	0	0	15,294	320	5
	ADA bn, Hawk:												
41	HHB	44–236G	7.64	0.00	2,484	0	670	0	0	0	3,154	0	2
42	4 ADA btry (each)	44–237G	5.40	0.00	1,942	0	420	0	0	0	2,362	0	1
43	Total	44–235G	29.24	0.00	10,252	0	2,350	0	0	0	12,602	0	6
	ADA bn, Hawk, SP:												
44	HHB	44–256T	8.36	1.89	2,660	320	760	0	0	0	3,420	320	2
45	3 ADA btry (each)	44–257T	5.52	0.00	1,906	0	450	0	0	0	2,356	0	1
46	Total	44–255T	24.92	1.89	8,378	320	2,110	0	0	0	10,488	320	5
	ADA bn, HERC:												
47	HHB	44–536G	22.10	0.00	7,447	0	1,445	0	0	0	8,892	0	2
48	4 ADA btry (each)	44–537G	1.27	0.00	519	0	125	0	0	0	644	0	1
49	Total	44–535G	27.18	0.00	9,523	0	1,945	0	0	0	11,468	0	6

f. Tactics and ammunition service are closely interrelated. Ammunition directly influences tactical operations; therefore, tactical commanders must plan their operations and commit their forces with full awareness of the support capabilities of the ammunition service support structure. Likewise, combat service support commanders must establish, stock, and employ ammunition service units with full awareness of the operational plans of the supported tactical commanders. In imbalance of either tactics or ammunition service may decisively influence operations. Thus, both tactical and combat service support commanders must consider tactics and ammunition service, not as individual entities, but as an inseparable unit that requires maximum attention, cooperation, and coordination.

5–9. Ammunition Supply Levels

Levels of ammunition supply normally are expressed as days of supply for each theater of operations and for major commands in each theater. These supply levels are established initially in accordance with references given in paragraph 5–8*e* and special authorization for support of contingency plans. Available ammunition assets then are announced as available supply rates (ASR). As tactical experience is gained, the required supply rate (RSR) is computed. The ammunition logistic system relates ammunition availability (ASR) to the planning consumption (RSR) so that the desired balance of reserves on hand can be maintained. Therefore, above-average consumption by one part of the force tends to be balanced by limiting the consumption of another part of the force. Major commanders will desire to maintain a planned level of supply as the minimum acceptable level of reserves. To change this level of supply by increasing the level of receipts requires a planning leadtime that may be in excess of tactical and operational planning leadtime. Factors that cause this long leadtime are procurement and production, order and shipping time, type and quantity of transportation available, storage space in a theater, physical security forces available to protect shipments and storage areas, and the extent of control over the tactical situation.

5–10. Ammunition Service at Direct Support Level

a. The ordnance company, ammunition, conventional, direct support/general support (TOE 9–38G), supplies all conventional ammunition to all units equipped with weapons firing conventional ammunition. This unit also performs direct support maintenance on conventional ammunition stored at the ammunition supply points.

b. The ordnance special ammunition direct support company (TOE 9–47G) provides special ammunition direct support supply to using units in the corps area. This unit also provides direct support maintenance for special ammunition (less missile-guidance sections) and maintenance calibration for user test equipment.

c. The ordnance special ammunition company, general support/direct support (TOE 9–48G), provides special ammunition direct support supply, technical assistance, and maintenance calibration for test equipment of using units in the army service area and the COMMZ.

d. Maintenance platoons organic to missile battalions provide direct support maintenance for high-cost, low-density missile systems. Rocket and missile support detachments (TOE 9–550T) provide this service for medium-cost, high-density missile systems. Missile direct support maintenance units also provide direct support supply for system-peculiar class IX items.

e. Explosive ordnance disposal detachments (TOE 9–520G) are designed to detect, identify, render safe, recover, evacuate, and dispose of U.S. and foreign explosive ordnance, including nuclear, biological, and chemical munitions that constitute a hazard to personnel, installations, materials, and operations. Explosive ordnance disposal units also assist in the destruction of ammunition to prevent capture by the enemy and in the destruction of enemy ammunition. Explosive ordnance disposal service is discussed in detail in FM 9–14.

5–11. Ammunition Service at General Support Level

a. The ordanance company, ammunition, conventional, direct support/general support (TOE 9–38G), provides conventional ammunition general support supply in the field army and at depot complexes in the COMMZ. Ammunition supply and renovation detachments (TOE 9–530G) provide general support maintenance for conventional ammunition at depot complexes in the COMMZ.

b. The ordnance special ammunition company, general support/direct support (TOE 9–48G), provides general support supply for all special

ammunition and class IX items for nuclear weapons and test equipment and general support maintenance for nuclear weapons and associated test equipment and trainers in the field army and at depot complexes in the COMMZ.

c. The ordnance company, guided-missile general support maintenance (TOE 9–59G), provides general support maintenance for the Hawk, Nike-Hercules, and Sergeant missile systems. The Pershing 1a maintenance and supply general support company (TOE 9–59G) provides general support maintenance for the Pershing missile system. Rocket and missile support detachments (TOE 9–550T) provide general support maintenance for medium-cost, high-density missile systems on an area basis.

d. The aircraft and missile repair parts supply company (general support) (TOE 29–129G) provides general support supply for missile-peculiar class IX items (less times peculiar to nuclear weapons and associated test equipment and trainers).

5–12. Conventional Ammunition Supply System

Conventional ammunition supply in the field army generally is based on a continuous refill system. Tactical units are responsible for maintaining a basic load of ammunition at all times. Replenishment of ammunition expended by units is either concurrent with an immediate requirement or in expectation of a requirement. Withdrawals from ammunition supply points are replenished by shipments from the COMMZ or from combat zone general support installations. The theater army commander prescribes stock levels to be maintained in field army ammunition installations and COMMZ depots. A system of credits controls ammunition to the field army, and the field army commander makes suballocations to the corps. The corps commander further suballocates ammunition to the division. The allocation of credits in COMMZ depots to field armies, the timely submission of RSR, the announcement of ASR by all commanders, the continuous refill system whereby units maintain their basic loads at prescribed levels, and a system of ammunition reports provide the extent of control that the situation requires. The procedures for supply and stock control of conventional ammunition involve the basic load, the RSR, the ASR, and the functions of major command ammunition officers as well as staff responsibilities of the G3 (S3) and the G4 (S4). The combat service support system provides the means for timely integration of these control factors. (FM 9–6 and AR 310–25 provide definitions and details.)

5–13. Special Ammunition Supply System

The basic load and automatic resupply system that applies to conventional ammunition is not applicable to special ammunition. Special ammunition service in the field is based on special ammunition stockages, special ammunition loads, and an allocation system. (AR 310–25 defines these terms.) Commanders receive allocations of special ammunition by specilc item for a specific time or a specific action. The special ammunition logistic element at theater army, field army, and corps coordinates all special ammunition logistic support matters within each of these headquarters. Commanders prescribe the distribution of available weapons to include ownership, storage units, location, type of weapons yields, and total numbers. The principles of the Army Field Stock Control System (AR 710–2) govern stockage of class IX items peculiar to special ammunition. FM 9–6 contains details on special ammunition supply and control.

5–14. Combat Vehicle Ammunition Data

a. Table 5–20 provides background material for the tables in paragraphs 5–15 and 5–16. Table 5–20 breaks out weapons from the principal item, the combat vehicle, and lists the ammunition carried in a type of division, both on the vehicle and in division trains, to support each weapon. Figures in columns 6, 7, and 8 are included in the basic load. Figures in other columns average out in the basic load for the weapon concerned, considering that any one weapon may vary among the different TOE units to which specific basic loads apply.

b. In table 5–20, data sources for distribution of weapon per combat vehicle are TM 9–500 and FM 101–20 and for rounds per weapon, CONARC

Table 5-20. Combat Vehicle Ammunition Data

1	2	3	4	5	6	7	8	9	10	11	12	13	14	15	16	17	18	19
		Armt	Misc stowage					Rd per veh				Ammo						
												Ammo stowage (rd per veh)				Rd per veh in tns		
1	LIN	Cbt veh	Prin wpn	Mg, cal .30/7.62-mm, lt, flex, M60	Mg, cal .50	Gren per veh	Flares, sig, gnd, per veh	Misc per veh	Prin wpn	Mg, cal .30/7.62-mm, lt, flex, M60	Smg, cal .45	Mg, cal .50	Prin wpn	Mg, cal .30/7.62-mm, lt, flex, M60	Smg, cal .45	Mg, cal .50	Prin wpn	Mg, cal .30/7.62-mm, lt, flex, M60	Mg, cal .50
2	A90117	Armt subsys, hel, 7.62-mm mg, lt, M23.		2						4,200				1,200				3,000	
3	A90154	Armt subsys, hel, 7.62-mm mg, high-rate, XM27.		1						4,500				1,500				3,000	
4	A90186	Armt subsys, hel, 7.62-mm mg, twin, M2.		2						6,500				1,300				5,200	
5	A90323	Armt subsys, hel, 7.62-mm mg, M6.		4						21,600				7,200				14,400	
6	A90426	Armt subsys, hel, 7.62-mm mg/2.75-in. RL, high-rate, M21.	2.75-in. RL	1					42	21,000			14	6,000			28	15,000	
7	A90460	Armt subsys, hel, 40-mm GL, M5.	40-mm GL						321				107				214		
8	A90597	Armt subsys, hel, 2.75-in. RL, XM3.	2.75-in RL						192				48				144		
9	A90871	Armt subsys, hel, GM lchr, M22.	GM lchr						36				6				30		
10	D10725	Carr, 81-mm mort, FTRAC, M125A1.	81-mm mort		1	8 hand	10		155			2,000	120			600	35		1,400
11	D10740	Carr, 107-mm mort, SP, M106A1.	107-mm mort	1	1	8 hand	10		163		180	2,000	93	3,000	180	600	70		1,400
12	D11401	Carr, comd and recon, armd, M114.		1	1	8 hand	12			3,520		1,400		2,640		1,000		880	400
13	D12086	Carr, pers, FTRAC, armd, M113A1.			1	20 hand	12				180	1,800			180	1,800			
14	D12086	Carr, pers, FTRAC, armd, M113.			1	20 hand	12				180	2,100			180	2,100			
15	E56577	CEV, FTRAC, M728	165-mm DM1 gun	1	1	8	10		30	3,410		735	30	3,410		735			
16	J96819	Gun, antiaircraft arty, SP, 40-mm, M42A1.	40-mm gun (twin)	1		8 hand		66-mm rkt, 4 rd	720	2,000			480	1,750			240	250	
17	J96956	Gun, at, SP, 90-mm, M56.	90-mm gun			8 hand			29				29						

18	J97230	Gun, FA, SP, 175-mm, M107.	175-mm gun			8	10		114				2				112		
19	K56981	How, hv, SP, 8-in., M110	8-in. how			8 hand	10		100				2			500	98		
20	K57255	How, lt, SP, 105-mm, M108.	105-mm how		1	10 hand	12		250			1,100	87			900	163		200
21	K57666	How, mdm, SP, 155-mm, M109.	155-mm how		1	8 hand	10	66-mm rkt, 10 rd	150			600	28			500	122		100
22	R50543	Recov veh, FTRAC, lt, armd, M578.			1	8 hand	16					600				500			100
23	R50680	Recov veh, FTRAC, mdm, M88.			1	8 hand	12	3.5-in. rkt, 10 rd			180	1,600			180	1,500			100
24	V12826	Tk, cbt, FTRAC, 76-mm gun, M41A3.	76-mm gun	1	1	8 hand	12		70	6,000	180	700	65	5,000	180	620	5	1,000	100
25	V12963	Tk, cbt, FTRAC, 90-mm gun, M48A2.	90-mm gun	1	1	8 hand	12		62	5,940	360	630	62	5,940	360	630			
26	V13100	Tk, cbt, FTRAC, 105-mm gun, M60A1.	105-mm gun	1	1	8 ahdn	12		78	6,500	360	1,260	63	5,000	360	900	15	1,500	360
27	V13237	Tk, cbt, FTRAC, 120-mm gun, M103A2.	120-mm gun	2	1				43	8,850	300	525	38	5,240	300	1,000	5	3,610	

Table 5-21. Ammunition Per Weapon Per Day, Expressed in Rounds

1	2	3	4	5	6	7	8	9	10	11	12	13	14	15
1 Weapon	Type of combat													
	Attack of position					Covering and security force action	Defense of position		Inactive situation	Meeting engagement	Pursuit	Retirement or delaying action	Assault of hostile shore	Protracted period
	Permanent fortifications		Deliberately organized		Hastily organized		First day	Succeeding days						
	First day	Succeeding days	First day	Succeeding days										
2 Armt subsys, hel, 7.62-mm mg, twin, M2	1,083	650	1,083	591	788	650	1,300	788	263	650	135	464	788	329
3 Armt subsys, hel, 40-mm GL, M5	267	161	267	146	195	161	321	195	65	161	33	115	195	81
4 Armt subsys, hel, GM lchr, M22	30	18	30	16	22	18	36	22	7	18	4	13	22	9
5 Armt subsys, hel, 7.62-mm mg, lt, M23	700	420	700	382	509	420	840	509	170	420	87	300	509	213
6 Armt subsys, hel, 7.62-mm mg, high-rate, XM27.	750	450	750	409	545	450	900	545	182	450	93	321	545	228
7 Guidance and launching sta (Entac)	13	8	13	7	9	8	15	9	3	8	2	5	9	4
8 Gun, mach, cal .50	219	132	219	120	159	132	263	159	53	132	27	94	159	67
9 Gun, mach, 7.62-mm	541	325	541	295	393	325	649	395	131	325	67	232	393	164
10 Gun, 175-mm, SP	95	57	95	52	69	-------	114	69	23	57	-------	-------	69	29
11 Gun, smg, cal .45	37	22	37	20	27	22	44	27	9	22	5	16	27	11
12 How, 105-mm, towed or SP	167	100	167	91	121	100	200	121	40	100	21	71	121	51
13 How, 155-mm, towed or SP	192	116	192	105	140	114	231	140	47	116	24	82	140	58
14 How, 8-in, towed or SP	119	72	119	65	87	72	143	87	29	72	-------	-------	87	36
15 Lchr, gren, 40-mm	27	16	27	15	19	16	32	19	6	16	3	11	19	8
16 Lchr, rkt, 7.62-mm	5	3	5	3	4	3	6	4	1	3	1	2	4	2
17 Mort, 81-mm	121	73	121	66	88	73	145	88	29	73	15	52	88	37
18 Mort, 107-mm	136	82	136	74	99	82	163	99	33	82	17	58	99	41
19 Pistol, cal .45, auto	3	2	3	2	2	2	4	2	1	2	-------	1	2	1
20 Rifle, 5.56-mm	124	74	124	67	90	74	148	90	30	74	15	53	90	38
21 Rifle, 7.62-mm	47	29	47	26	35	29	57	35	12	29	6	20	35	14
22 Rifle, 7.62-mm, auto, with bipod	112	67	112	61	81	67	134	81	27	67	14	48	81	34
23 Rifle, rcl, 90-mm	15	9	15	8	11	9	18	11	4	9	2	6	11	5
24 Rifle, rcl, 106-mm	33	20	33	18	24	20	40	24	8	20	4	14	24	10
25 Tk, cbt, FTRAC, 76-mm gun	58	35	58	32	42	35	70	42	14	35	7	25	42	18
26 Tk, cbt, FTRAC, 90-mm gun	52	31	52	28	38	31	62	38	13	31	7	22	38	16
27 Tk, cbt, FTRAC, 105-mm gun	65	39	65	35	47	39	78	47	16	39	8	28	47	20

Table 5–22. Ammunition Per Type of Unit Per Day, Expressed in STON

1	2	3	4	5	6	7	8	9	10	11	12	13	14	15
1 Weapon	Type of combat													
	Attack of position					Covering and security force action	Defense of position		Inactive situation	Meeting engagement	Pursuit	Retirement or delaying action	Assault of hostile shore	Protracted period
	Permanent fortifications		Deliberately organized		Hastily organized		First day	Succeeding days						
	First day	Succeeding days	First day	Succeeding days										
2 Abn div	676	406	649	369	491	345	811	491	162	406	89	280	491	205
3 Armd div	2,145	1,287	2,059	1,170	1,560	1,095	2,574	1,560	515	1,287	281	888	1,560	651
4 Inf div	1,262	758	1,212	689	918	645	1,515	918	303	758	165	522	918	383
5 Inf div (mech)	1,817	1,190	1,744	991	1,321	928	2,180	1,321	436	1,090	238	752	1,321	552
6 Corps arty, 155-mm bn	200	120	192	109	145	102	240	145	48	120	26	83	145	61
7 Corps arty, 8-in. bn	171	103	164	93	124	-------	205	124	41	103	-------	-------	124	52
8 Corps arty, 175-mm bn	98	59	94	54	72	-------	118	72	24	59	-------	-------	72	30
9 Corps arty, HJ bn	99	60	95	54	72	51	119	72	24	60	13	41	72	30

Regulation 700-3, *Logistics—Basic Load Ammunition Supply Data.*

5-15. Estimated Expenditures of Ammunition

a. Table 5-21 shows estimated rounds of ammunition per weapon per day expected for or attributed to different types of combat for conventional conflict. This table and table 5-22 are based on the relationships of types of combat to one another, the rounds available per weapon in the basic loads, the weighting of rounds according to the mission of each division and supporting corps artillery, and the weapons assigned "G" series TOE units. This table does not include consideration of close air support.

b. Table 5-22 shows the STON of ammunition per day used per division or corps artillery battalion, based on the number of rounds computed from table 5-21. The first day's expenditure of ammunition for the grenade launcher and recoilless rifles equals the basic load. This table does not include consideration of close air support.

5-16. Field Artillery Ammunition Expenditures

a. Table 5-23 shows the average rate of expenditure per weapon per hour of various types of field artillery rounds in division and corps units. Figures in column 6 represent the support of ground divisional and nondivisional maneuver units.

b. Table 5-24 shows the STON expended per hour by division and corps artillery battalions. The figures in columns 2, 3, and 5 are derived from World War II experience and will require modification to fit current weapons and tactics. Figures in coolumn 6 represent the support of ground divisional and nondivisional maneuver units.

5-17. Vietnam Ammunition Expenditure Rates

a. Tables 5-25 and 5-26, which provide ammunition expenditure rates for selected items of equipment of divisional and nondivisional units, are based on Vietnam experience. Table 5-25 provides expenditure rates by intensity of mission

Table 5-23. Expenditures in Rounds Per Weapon Per Hour

1	1	2	3	4	5	6
1	Kind of fire or phase of action	Average rate per weapon per hour				
		105-mm	155-mm	175-mm	8-in.	HJ
2	Advance guard action, development, and deployment	25	12	8	8	0.125
3	Preparation	80	25	28	25	0.75
	Supporting fires during the attack (including counterbattery):					
4	First 2 hours	50	25	28	25	0.5
5	After 2 hours	30	15	17	15	0.125
6	Exploitation, pursuit, delaying action, or delaying enemy development	25	12	16	12	0.5
7	Counterpreparation	60	25	28	25	0.125
8	Defensive fires against infantry attack (including counterbattery)	50	25	28	25	0.5
9	Fortified position	50	25	28	25	0.125

Table 5-24. Expenditures in STON Per Battalion Per Hour

1	1	2	3	4	5	6
1	Kind of fire or phase of action	Average rate per weapon per hour				
		105-mm	155-mm	175-mm	8-in.	HJ
2	Advance guard action, development, and deployment	11.02	12.35	9.96	9.96	2.25
3	Preparation	35.28	25.87	35.37	33.78	13.50
	Supporting fires during the attack (including counterbattery):					
4	First 2 hours	22.05	25.87	35.37	33.78	9.00
5	After 2 hours	13.22	15.52	21.55	20.00	2.25
6	Exploitation, pursuit, delaying action, or delaying enemy development	11.02	12.52	20.24	16.17	9.00
7	Counterpreparation	26.46	25.87	35.37	33.78	2.25
8	Defensive fires against infantry attack (including counterbattery)	22.05	25.87	35.37	33.78	9.00

and terrain. Table 5–26 shows expenditure rates by intensity of mission. The expenditure rates given in these tables are for general planning purposes for low-intensity conflicts.

b. The ammunition expenditure rates shown in table 5–25 and 5–26 are mean rates. The mean rate is the average number of rounds per weapon per day epxected to be used over a period of days in which similar conditions occur. On any single day, an expenditure rate of from ¼ to 2 times the mean rate generally can be expected to occur.

c. Expenditure rates are computed on the basis of rounds per weapon per day, considering only those days on which expenditures occur. Over an extended period of time, most units can be expected to experience inactive periods when no ammunition is expended.

d. Expenditure rates are shown for the following six missions, as applicable:

(1) Reconnaissance in force—operations designed to locate enemy installations, to destroy or evacuate supplies and equipment, and to destroy or capture enemy forces. In this mission, less importance is attached to seizing and holding critical terrain than to finding and destroying enemy armed forces and the political infrastructure.

(2) Clear and secure—offensive combat operations designed to repel enemy forces and to hold a designated area. These operations generally are initiated by reconnaissance-in-force actions; however, they differ from absolute reconnaissance-in-force actions because they are sustained and emphasis is on seizing and holding key population and communications centers.

(3) Cordon and search—military force operations to seal an area that is then searched by another force (or by part of the sealing force). These operations normally apply in or around a village or hamlet.

(4) Security—operations designed to seize and hold routes, installations, and facilities. These operations include convoy, route, fire base, and temporary area security. Convoy security operations can be accomplished by temporarily securing the route to be used or by accompanying the convoy with an appropriate mix of combat units. Time is limited to complete the convoy movement.

(5) Base camp defense—tactical missions reported by all combat and noncombat support units engaged in defending or supporting the defense of the permanent base camp when under attack.

(6) Not under attack—periods when a unit may fire but not be under attack by the enemy.

e. Ammunition expenditure rates are shown for four levels of intensity as follows:

(1) Heavy—a high level of intensity that may include short periods of moderate or light combat, resulting in heavy casualties and large expenditures of ammunition.

(2) Moderate—a level of intensity that may include short periods of heavy fighting, resulting in moderate casualties and moderate expenditures of ammunition.

(3) Light—a level of intensity that includes sporadic contact with the enemy, with little or no organized enemy resistance, resulting in light or no casualties and small expenditures of ammunition.

(4) Inactive—a period that a unit is not engaged against the enemy but may sustain losses of equipment and ammunition as a result of enemy action.

f. Field artillery units can be expected to fire more than one type of mission within a 24-hour period. To compute field artillery daily expenditures rates from the tables below, the planner should consider the following number of missions per day within the same terrain category:

(1) *Divisional field artillery.*

(*a*) 8-inch howitzer—three missions per day.

(*b*) 155-mm gun—two missions per day.

(c) 105-mm howitzer—three missions per day.

(2) *Nondivisional field artillery.*

(*a*) 8-inch howitzer—two missions per day.

(*b*) 175-mm gun—two missions per day.

(*c*) 155-mm howitzer—two missions per day.

(*d*) 105-mm howitzer—three missions per day.

Table 5–25. Daily Expenditures of Ammunition (Rounds Per Weapon) by Intensity of Mission and Terrain

*a. 8-Inch Howitzer, Division Artillery Battalions**

1	1 Mission	2 Intensity of mission	3 Jungle	4 Forest/ plantation	5 Open	6 Moun- tainous	7 Paddy/ marsh
2		Heavy			15		
3	Reconnaissance in force	Moderate			15		
4		Light	18	18			8
5		Inactive	8	8			
6		Heavy					
7		Moderate					14
8	Clear and secure	Light	5	5	11		8
9		Inactive					
10		Heavy					
11	Cordon and search	Moderate	9	9			11
12		Light	5	5	4		2
13		Inactive					
14		Heavy					
15	Security	Moderate					
16		Light	12	12			4
17		Inactive	8	8			
18		Heavy					
19	Base camp defense	Moderate					
20		Light	10	10		10	
21		Inactive	12	12			
22		Heavy			31		31
23	Not under attack	Moderate					21
24		Light	19	19	8	8	32
25		Inactive	28	28		10	21

*Field artillery units can be expected to fire more than one type of mission per day. To compute the daily ammunition expenditure rate for this weapon, consider a total of three missions per day within the same terrain category.

Table 2-25. Daily Expenditures of Ammunition (Rounds Per Weapon) by Intensity of Mission and Terrain—Continued

*b. 8-Inch Howitzer, Nondivisional Artillery Battalions**

1	1 Mission	2 Intensity of mission	3 Jungle	4 Forest/ plantation	5 Open	6 Mountainous	7 Paddy/ marsh
2		Heavy					
3	Reconnaissance in force	Moderate					
4		Light	12	12	33	14	
5		Inactive	6	6	31	14	
6		Heavy			43	34	
7	Clear and secure	Moderate			31	19	
8		Light	7	7	15	13	
9		Inactive	24	24			
10		Heavy					
11	Cordon and search	Moderate					
12		Light					
13		Inactive					
14		Heavy	29	29			
15	Security	Moderate	44	44			
16		Light	12	12			
17		Inactive	7	7			
18		Heavy			66		
19	Base camp defense	Moderate	13	13	13		
20		Light	12	12	12		
21		Inactive	6	6			
22		Heavy	35	35			
23	Not under attack	Moderate	27	27	49	12	
24		Light	17	17	26	5	28
25		Inactive	26	26			

*Field artillery units can be expected to fire more than one type of mission per day. To compute the daily ammunition expenditure rate for this weapon, consider a total of two missions per day within the same terrain category.

Table 5-25. Daily Expenditures of Ammunition (Rounds Per Weapon) by Intensity of Mission and Terrain—Continued

*c. 175-mm Gun, Nondivisional Artillery Battalions**

1	1 Mission	2 Intensity of mission	3 Jungle	4 Forest/ plantation	5 Open	6 Moun- tainous	7 Pad y/ marsh
2		Heavy					
3	Reconnaissance in force	Moderate					
4		Light	6	6	31	6	
5		Inactive	12	12	29		
6		Heavy			55	18	
7	Clear and secure	Moderate			31	13	
8		Light	4	4	27	10	
9		Inactive	25	25			
10		Heavy					
11	Cordon and search	Moderate					
12		Light					
13		Inactive					
14		Heavy	26	26			
15	Security	Moderate	33	33			
16		Light	11	11			
17		Inactive	8	8			
18		Heavy	28	28	61		
19	Base camp defense	Moderate	11	11	18		
20		Light	12	12	12		
21		Inactive	4	4			
22		Heavy	31	31			
23	Not under attack	Moderate	21	21	39	11	
24		Light	13	13	12	6	23
25		Inactive	23	23			

*Field artillery units can be expected to fire more than one type of mission per day. To compute the daily ammunition expenditure rate for this weapon, consider a total of two missions per day within the same terrain category.

Table 5-25. Daily Expenditures of Ammunition (Rounds Per Weapon) by Intensity of Mission and Terrain—Continued

d. 155-mm Howitzer, Division Artillery Battalions[1]

1	1 Mission	2 Intensity of mission	3 Jungle	4 Forest/ plantation	5 Open	6 Moun- tainous	7 Paddy/ marsh
2		Heavy	11				
3	Reconnaissance in force	Moderate	7				13
4		Light	11	22	6		2
5		Inactive	6				
6		Heavy					
7	Clear and secure	Moderate	12				21
8		Light	6			10	1
9		Inactive					
10		Heavy					
11	Cordon and search	Moderate	4				3
12		Light	3				2
13		Inactive					
14		Heavy					
15	Security	Moderate	7				7
16		Light	5	4			4
17		Inactive	10				
18		Heavy					
19	Base camp defense	Moderate [2]				3	
20		Light [3]					
21		Inactive	3				
22		Heavy					
23	Not under attack	Moderate	9			14	10
24		Light	4		52	26	6
25		Inactive	6			6	12

[1] Field artillery units can be expected to fire more than one type of mission per day. To compute the daily ammunition expenditure rate for this weapon, consider a total of four missions per day within the same terrain category.

[2] 17 rounds of ammunition when supporting ARVN forces.

[3] 9 rounds of ammunition when supporting ARVN forces.

Table 5-25. Daily Expenditures of Ammunition (Rounds Per Weapon) by Intensity of Mission and Terrain—Continued

e. 155-mm Howitzer, Nondivisional Artillery Battalions[1]

1	2	3	4	5	6	7
Mission	Intensity of mission	Jungle	Forest/ plantation	Open	Mountainous	Paddy/ marsh[2]
	Heavy	58	58			
Reconnaissance in force	Moderate	47	47	24		
	Light	35	35	20		
	Inactive					
	Heavy					
Clear and secure	Moderate			28		
	Light			28	36	
	Inactive					
	Heavy					
Cordon and search	Moderate					
	Light					
	Inactive					
	Heavy	40	40			
Security	Moderate	21	21			
	Light	10	10			
	Inactive				6	
	Heavy					
Base camp defense	Moderate	12	12			
	Light	6	6		6	
	Inactive					
	Heavy					
Not under attack	Moderate	35	35			
	Light			34	19	
	Inactive					

[1] Field artillery units can be expected to fire more than one type of mission per day. To compute the daily ammunition expenditure rate for this weapon, consider a total of two missions per day within the same terrain category.

[2] Data are not available.

Table 5-25. Daily Expenditures of Ammunition (Rounds Per Weapon) by Intensity of Mission and Terrain—Continued

*f. 105-mm Howitzer, Infantry Division Artillery Battalions**

1	1 Mission	2 Intensity of mission	3 Jungle	4 Forest/ plantation	5 Open	6 Moun- tainous	7 Paddy/ marsh
2		Heavy	51		56	28	
3	Reconnaissance in force	Moderate	21	8	32	20	35
4		Light	43	2	14	15	32
5		Inactive					
6		Heavy					42
7	Clear and secure	Moderate	17		34	39	56
8		Light	44		7	12	19
9		Inactive	10				
10		Heavy					
11	Cordon and search	Moderate					
12		Light					18
13		Inactive					
14		Heavy		14			
15	Security	Moderate	22	7	22	8	
16		Light	7	2	11	12	21
17		Inactive	6				
18		Heavy					
19	Base camp defense	Moderate		33		12	41
20		Light	49		8	2	16
21		Inactive					4
22		Heavy		12			
23	Not under attack	Moderate	8	5	9	27	11
24		Light	19	2	11	2	9
25		Inactive	15				4

*Field artillery units can be expected to fire more than one type of mission per day. To compute the daily ammunition expenditure rate for this weapon, consider a total of four missions per day within the same terrain category.

Table 5-25. Daily Expenditures of Ammunition (Rounds Per Weapon) by Intensity of Mission and Terrain—Continued

*g. 105-mm Howitzer, Airborne and Airmobile Division Artillery Battalions**

1	1 Mission	2 Intensity of mission	3 Jungle	4 Forest/ plantation	5 Open	6 Mountainous	7 Paddy/ marsh
2		Heavy			25		
3	Reconnaissance in force	Moderate	28		28		
4		Light	12	8	28	23	20
5		Inactive			13	16	
6		Heavy			17		
7	Clear and secure	Moderate					13
8		Light		19		29	21
9		Inactive					
10		Heavy					
11	Cordon and search	Moderate		28			
12		Light	28	14	7		
13		Inactive					
14		Heavy					
15	Security	Moderate					10
16		Light					13
17		Inactive	6		8	6	
18		Heavy					
19	Base camp defense	Moderate					
20		Light		7		26	7
21		Inactive					
22		Heavy					
23	Not under attack	Moderate					
24		Light		19			
25		Inactive			11		25

*Field artillery units can be expected to fire more than one type of mission per day. To compute the daily ammunition expenditure rate for this weapon, consider a total of four missions per day within the same terrain category.

Table 5-25. Daily Expenditures of Ammunition (Rounds Per Weapon) by Intensity of Mission and Terrain—Continued

*h. 105-mm Howitzer, Nondivisional Artillery Battalions**

1	1 Mission	2 Intensity of mission	3 Jungle	4 Forest/ plantation	5 Open	6 Mountainous	7 Paddy/ marsh
2		Heany	40	40	83		
3	Reconnaissance in force	Moderate	31	31	37		
4		Light	18	18	19	5	72
5		Inactive					
6		Heavy					
7	Clear and secure	Moderate			16		
8		Light			13	12	
9		Inactive					
10		Heavy					
11	Cordon and search	Moderate	13	13			
12		Light	7	7		5	
13		Inactive				5	
14		Heavy					
15	Security	Moderate					
16		Light	20	20	8		
17		Inactive				4	
18		Heavy					
19	Base camp defense	Moderate					
20		Light			17		
21		Inactive					
22		Heavy					
23	Not under attack	Moderate			63	18	
24		Light	8	8	14	14	12
25		Inactive	8	8	6	12	8

*Field artillery units can be expected to fire more than one type of mission per day. To compute the daily ammunition expenditure rate for this weapon, consider a total of three missions per day within the same terrain category.

Table 5-25. Daily Expenditures of Ammunition (Rounds Per Weapon) by Intensity of Mission and Terrain—Continued

i. 4.2-Inch Mortar, Infantry Battalion

1	1 Mission	2 Intensity of mission	3 Jungle	4 Forest/ plantation	5 Open	6 Mountainous	7 Paddy/ marsh
2		Heavy	56				66
3	Reconnaissance in force	Moderate	104	36			57
4		Light	28	38	35	48	41
5		Inactive				10	
6		Heavy					
7	Clear and secure	Moderate	22		31	36	58
8		Light	31	15	47	40	41
9		Inactive	17				
10		Heavy					
11	Cordon and search	Moderate			22	13	32
12		Light	19	24	48		54
13		Inactive	21		32		
14		Heavy					
15	Security	Moderate					31
16		Light	32	40	32		48
17		Inactive					15
18		Heavy					
19	Base camp defense	Moderate	47			44	47
20		Light	42		78	31	77
21		Inactive			43	13	29
22		Heavy					
23	Not under attack	Moderate					
24		Light					
25		Inactive				8	15

Table 5-25. Daily Expenditures of Ammunition (Rounds Per Weapon) by Intensity of Mission and Terrain—Continued

j. 4.2-Inch Mortar, Infantry Battalion (Mechanized)

1	1 Mission	2 Intensity of mission	3 Jungle	4 Forest/ plantation	5 Open	6 Mountainous *	7 Paddy/ marsh
2		Heavy	62				
3	Reconnaissance in force	Moderate	50				
4		Light	53	13			40
5		Inactive					
6		Heavy					
7	Clear and secure	Moderate	28				
8		Light	34				45
9		Inactive					
10		Heavy					
11	Cordon and search	Moderate					
12		Light					
13		Inactive					
14		Heavy					
15	Security	Moderate					
16		Light	35	10	16		22
17		Inactive					22
18		Heavy					
19	Base camp defense	Moderate					
20		Light		17			41
21		Inactive					17
22		Heavy					
23	Not under attack	Moderate					
24		Light			8		
25		Inactive					

*Data are not available.

Table 5-25. Daily Expenditures of Ammunition (Rounds Per Weapon) by Intensity of Mission and Terrain—Continued

k. 81-mm Mortar, Infantry Battilion

1	1 Mission	2 Intensity of mission	3 Jungle	4 Forest/ plantation	5 Open	6 Mountainous	7 Paddy/ marsh
2		Heavy	56				13
3	Reconnaissance in force	Moderate	30	31	20		30
4		Light	21	27	29	15	16
5		Inactive	13	18	13	6	13
6		Heavy					
7	Clear and secure	Moderate	9		16	21	21
8		Light	17	15	20	20	23
9		Inactive	15				7
10		Heavy					
11	Cordon and search	Moderate			8	5	29
12		Light	14	16	32		30
13		Inactive	14		24		
14		Heavy					
15	Security	Moderate	9				14
16		Light	7	9	16	5	26
17		Inactive	26				8
18		Heavy					
19	Base camp defense	Moderate					
20		Light	20	17	18		
21		Inactive	7			5	24
22		Heavy					
23	Not under attack	Moderate					
24		Light	20		18	5	12
25		Inactive	14				

Table 5-25. Daily Expenditures of Ammunition (Rounds Per Weapon) by Intensity of Mission and Terrain—Continued

l. 81-mm Mortar, Infantry Battalion (Mechanized)[1]

1	1 Mission	2 Intensity of mission	3 Jungle	4 Forest/ plantation	5 Open	6 Mountainous[2]	7 Paddy/ marsh
2		Heavy	37				
3	Reconnaissance in force	Moderate	23				
4		Light	26	9			15
5		Inactive	16				
6		Heavy					
7	Clear and secure	Moderate	19				
8		Light	11	13			13
9		Inactive					
10		Heavy					
11	Cordon and search	Moderate					
12		Light					
13		Inactive					
14		Heavy					
15	Security	Moderate	17		17		
16		Light	14	5	11		14
17		Inactive	11				15
18		Heavy					
19	Base camp defense	Moderate					
20		Light					
21		Inactive					11
22		Heavy					
23	Not under attack	Moderate					
24		Light					
25		Inactive					14

[1] Daytime rates only. Data are not available to establish nighttime rates.
[2] Data are not available.

Table 5-25. Daily Expenditures of Ammunition (Rounds Per Weapon) by Intensity of Mission and Terrain—Continued

m. 81-mm Mortar, Airmobile Infantry Battalion

1	1 Mission	2 Intensity of mission	3 Jungle	4 Forest/ plantation	5 Open	6 Moun- tainous	7 Paddy/ marsh
2		Heavy	24				
3	Reconnaissance in force	Moderate	15	12			
4		Light	14	6	4	7	26
5		Inactive	6	7		6	
6		Heavy	23				
7	Clear and secure	Moderate	17		17	20	
8		Light	9	18	7	10	5
9		Inactive	6	9	2		
10		Heavy					
11	Cordon and search	Moderate	14				
12		Light			10	8	
13		Inactive					
14		Heavy					
15	Security	Moderate					
16		Light		2	8	11	
17		Inactive					
18		Heavy					
19	Base camp defense	Moderate					
20		Light			8	20	
21		Inactive	1			13	
22		Heavy					
23	Not under attack	Moderate					
24		Light					
25		Inactive					

Table 5-25. Daily Expenditures of Ammunition (Rounds Per Weapon) by Intensity of Mission and Terrain—Continued

n. 2.75-Inch Rocket, Assault Helicopter Company

1	1 Mission	2 Intensity of mission	3 Jungle	4 Forest/ plantation	5 Open	6 Mountainous	7 Paddy/ marsh
2		Heavy	115				105
3	Reconnaissance in force	Moderate	80			115	95
4		Light	70	50	60	75	60
5		Inactive	55				35
6		Heavy					
7	Clear and secure	Moderate	75		80		90
8		Light	65	55	60	65	75
9		Inactive					60
10		Heavy					
11	Cordon and search	Moderate	85	65			
12		Light	100	50			65
13		Inactive					
14		Heavy					
15	Security	Moderate					
16		Light					
17		Inactive					
18		Heavy					
19	Base camp defense	Moderate					
20		Light					
21		Inactive					
22		Heavy		190			
23	Not under attack	Moderate		100			
24		Light	55	80			
25		Inactive					

Table 5-25. Daily Expenditures of Ammunition (Rounds Per Weapon) by Intensity of Mission and Terrain—Continued

o. *40-mm Grenade Launcher, Infantry Battalion*

1	1 Mission	2 Intensity of mission	3 Jungle	4 Forest/ plantation	5 Open	6 Mountainous	7 Paddy/ marsh
2		Heavy	3.25	3.25			5.75
3	Reconnaissance in force	Moderate	5.00	5.00	4.50		4.50
4		Light	3.00	3.00	2.75	2.50	2.75
5		Inactive	2.00	2.00	2.00		1.25
6		Heavy					
7	Clear and secure	Moderate	4.00	4.00	5.00	2.50	5.75
8		Light	1.75	1.75	2.50	2.25	3.75
9		Inactive	1.00	1.00			
10		Heavy					
11	Cordon and search	Moderate			1.00	4.00	6.50
12		Light	1.75	1.75	2.25	1.75	3.50
13		Inactive	1.50	1.50			
14		Heavy					
15	Security	Moderate					
16		Light	1.50	1.50	2.50		2.75
17		Inactive					0.75
18		Heavy					
19	Base camp defense	Moderate				5.25	2.50
20		Light	1.25	1.25	1.25	2.00	4.00
21		Inactive				0.75	1.25
22		Heavy					
23	Not under attack	Moderate					
24		Light					
25		Inactive					

Table 5-25. Daily Expenditures of Ammunition (Rounds Per Weapon) by Intensity of Mission and Terrain—Continued

p. 40-mm Grenade Launcher, Infantry Battalion (Mechanized) [1]

1	1 Mission	2 Intensity of mission	3 Jungle	4 Forest/ plantation	5 Open	6 Mountainous [2]	7 Paddy/ marah
2		Heavy	8.50				
3	Reconnaissance in force	Moderate	4.25				
4		Light	2.50	1.25			2.50
5		Inactive	1.25				
6		Heavy					
7	Clear and secure	Moderate	2.50				
8		Light	1.50	1.75			3.50
9		Inactive					
10		Heavy					
11	Cordon and search	Moderate					
12		Light					
13		Inactive					
14		Heavy					
15	Security	Moderate	2.75				
16		Light	2.00	1.50	2.00		
17		Inactive		1.75			
18		Heavy					
19	Base camp defense	Moderate					
20		Light		2.00			
21		Inactive					
22		Heavy					
23	Not under attack	Moderate					
24		Light					
25		Inactive					

[1] Daytime rates only. Data are not available to establish nighttime rates.
[2] Data are not available.

Table 5-25. Daily Expenditures of Ammunition (Rounds Per Weapon) by Intensity of Mission and Terrain—Continued

*q. 40-mm Grenade Launcher, Airmobile Infantry Battalion**

1	1 Mission	2 Intensity of mission	3 Jungle	4 Forest/ plantation	5 Open	6 Moun- tainous	7 Paddy/ marsh
2		Heavy	4.50				
3	Reconnaissance in force	Moderate	2.00	1.50	1.25		
4		Light	1.75	0.75	0.75	1.00	
5		Inactive	1.25	0.25			
6		Heavy	4.00				
7	Clear and secure	Moderate	1.25		1.75	2.50	
8		Light	1.50	2.75	1.00	1.50	1.00
9		Inactive	4.50		1.25		
10		Heavy					3.00
11	Cordon and search	Moderate	3.00		1.50		1.25
12		Light					
13		Inactive				1.50	
14		Heavy					
15	Security	Moderate					
16		Light	2.50	0.50	1.50		
17		Inactive					
18		Heavy					
19	Base camp defense	Moderate					
20		Loght	1.25		0.50		
21		Inactive				3.25	
22		Heavy					
23	Not under attack	Moderate					
24		Light					
25		Inactive					

* Daytime rates only. Data are not available to establish nighttime rates.

Table 5-25. Daily Expenditures of Ammunition (Rounds Per Weapon) by Intensity of Mission and Terrain—Continued

r. 40-mm Armament Subsystem, M5, Assault Helicopter Company

1	1 Mission	2 Intensity of mission	3 Jungle	4 Forest/ plantation	5 Open	6 Mountainous	7 Paddy/ marsh
2		Heavy	240				310
3	Reconniassance in force	Moderate	180			190	160
4		Light	150			80	90
5		Inactive	80				80
6		Heavy				200	
7	Clear and secure	Moderate	160		150	90	110
8		Light	110	100	70	70	90
9		Inactive					
10		Heavy					
11	Cordon and search	Moderate					
12		Light	120				
13		Inactive					
14		Heavy					
15	Security	Moderate					
16		Light	200				
17		Inactive					
18		Heavy					
19	Base camp defense	Moderate					
20		Light					
21		Inactive					
22		Heavy					
23	Not under attack	Moderate					
24		Light					
25		Inactive					

Table 5-25. Daily Expenditures of Ammunition (Rounds Per Weapon) by Intensity of Mission and Terrain—Continued

8. Caliber .50 Machinegun, Infantry and Airmobile Infantry Battalions [1]

1	1 Mission	2 Intensity of mission	3 Jungle	4 Forest/ plantation	5 Open	6 Moun- tainous	7 Paddy/ marsh
2		Heavy	325				
3	Reconnaissance in force [2]	Moderate	175				
4		Light	125	75	350		
5		Inactive	75				
6		Heavy					
7	Clear and secure [2]	Moderate	175				
8		Light	250	500	475	275	
9		Inactive	50				
10		Heavy					
11	Cordon and search	Moderate					
12		Light	75		475		150
13		Inactive					
14		Heavy					
15	Security	Moderate		100			
16		Light	125	225			
17		Inactive				250	
18		Heavy					
19	Base camp defense	Moderate					
20		Light	125				
21		Inactive				250	
22		Heavy					
23	Not under attack	Moderate					
24		Light					
25		Inactive					

[1] Daytime rates only. Data are not available to establish nighttime rates.

[2] Limited data indicate approximately 100 rounds per day expended in jungle terrain in reconnaissance-in-force operations at night and approximately 60 rounds in clear and secure operations.

Table 5-25. Daily Expenditures of Ammunition (Rounds Per Weapon) by Intensity of Mission and Terrain—Continued

t. Caliber .50 Machinegun, Infantry Battalion (Mechanized) [1]

1	2	3	4	5	6	7
Mission	Intensity of mission	Jungle	Forest/ plantation	Open	Mountainous [2]	Paddy/ marsh
Reconnaissance in force	Heavy	160				
	Moderate	55				
	Light	40	15			
	Inactive					
Clear and secure	Heavy					
	Moderate	100				
	Light	35	35			40
	Inactive					
Cordon and search	Heavy					
	Moderate					
	Light					
	Inactive					
Security	Heavy					
	Moderate	75				
	Light	30		45		25
	Inactive					
Base camp defense	Heavy					
	Moderate					
	Light		75			
	Inactive					
Not under attack	Heavy					
	Moderate					
	Light					
	Inactive					

[1] Daytime rates only. Data are not available to establish nighttime rates.
[2] Data are not available.

Table 5-25. Daily Expenditures of Ammunition (Rounds Per Weapon) by Intensity of Mission and Terrain—Continued

u. Caliber .50 Machinegun, Armored Cavalry Squadron

1	1 Mission	2 Intensity of mission	3 Jungle	4 Forest/ plantation	5 Open	6 Mountainous *	7 Paddy/ marsh
2		Heavy					
3	Reconnaissance in force	Moderate	75				40
4		Light	55	20	25		25
5		Inactive					
6		Heavy					
7	Clear and secure	Moderate					
8		Light	25	50			
9		Inactive			15		
10		Heavy					
11	Cordon and search	Moderate					
12		Light					
13		Inactive					
14		Heavy					
15	Security	Moderate	7	25			
16		Light	9		10		
17		Inactive					
18		Heavy					
19	Base camp defense	Moderate					
20		Light					
21		Inactive					
22		Heavy					
23	Not under attack	Moderate					
24		Light					
25		Inactive					

*Data are not available

Table 5-25. Daily Expenditures of Ammunition (Rounds Per Weapon) by Intensity of Mission and Terrain—Continued

v. 7.62-mm Machinegun, Infantry Battalion

1	1 Mission	2 Intensity of mission	3 Jungle	4 Forest/ plantation	5 Open	6 Mountainous	7 Paddy/ marsh
2		Heavy					
3	Reconnaissance in force	Moderate	160	150			175
4		Light	110	80	165	170	105
5		Inactive	80		80		30
6		Heavy					
7	Clear and secure	Moderate				140	190
8		Light	95	95	125	160	175
9		Inactive	40				
10		Heavy					
11	Cordon and search	Moderate			85	35	245
12		Light	95		115		125
13		Inactive	90				
14		Heavy					
15	Security	Moderate					
16		Light	25		135		100
17		Inactive					
18		Heavy					
19	Base camp defense	Moderate				245	
20		Light	55			55	45
21		Inactive				50	35
22		Heavy					
23	Not under attack	Moderate					
24		Light					
25		Inactive					

Table 5-25. Daily Expenditures of Ammunition (Rounds Per Weapon) by Intensity of Mission and Terrain—Continued

w. 7.62-mm Machinegun, Infantry Battalion (Mechanized) [1]

1	1 Mission	2 Intensity of mission	3 Jungle	4 Forest/ plantation	5 Open	6 Mountainous [2]	7 Paddy/ marsh
2		Heavy	240				
3	Reconnaissance in force	Moderate	105				
4		Light	60	30			45
5		Inactive	40				
6		Heavy					
7	Clear and secure	Moderate	115				
8		Light	50	50			45
9		Inactive					
10		Heavy					
11	Cordon and search	Moderate	75				
12		Light	45		60		
13		Inactive					
14		Heavy					
15	Security	Moderate	75				
16		Light	45		60		35
17		Inactive					35
18		Heavy					
19	Base camp defense	Moderate					
20		Light					20
21		Inactive					
22		Heavy					
23	Not under attack	Moderate					
24		Light					
25		Inactive					

[1] Daytime rates only. Data are not available to establish nighttime rates.
[2] Data are not available.

Table 5-25. Daily Expenditures of Ammunition (Rounds Per Weapon) by Intensity of Mission and Terrain—Continued

x. 7.62-mm Machinegun, Airmobile Infantry Battalion [1]

1	1 Mission	2 Intensity of mission	3 Jungle	4 Forest/ plantation	5 Open	6 Mountainous	7 Paddy/ marsh
2		Heavy					
3	Reconnaissance [2]	Moderate	90	115	55		
4		Light	65	40	50	55	
5		Inactive	40	45			
6		Heavy	250				
7	Clear and secure [2]	Moderate	60				
8		Light	75	115		65	55
9		Inactive	35	50	25		
10		Heavy					
11	Cordon and search	Moderate					
12		Light			60		40
13		Inactive					
14		Heavy					
15	Security	Moderate					
16		Light	50	30	45	100	
17		Inactive					
18		Heavy					
19	Base camp defense	Moderate					
20		Light			25		
21		Inactive	65			35	
22		Heavy					
23	Not under attack	Moderate					
24		Light					
25		Inactive					

[1] Daytime rates only. Data are not available to establish nighttime rates.

[2] Limited data indicate approximately 100 rounds per day expended in jungle terrain in reconnaissance-in-force operations at night and approximately 60 rounds n clear and secure operations.

Table 5-25. Daily Expenditures of Ammunition (Rounds Per Weapon) by Intensity of Mission and Terrain—Continued

y. 7.62-mm Machinegun, Assault Helicopter Company

1	1 Mission	2 Intensity of mission	3 Jungle	4 Forest/ plantation	5 Open	6 Moun- tainous	7 Paddy/ marsh
2		Heavy	300				240
3	Reconnaissance in force	Moderate	170		130	80	240
4		Light	140	60	110	100	60
5		Inactive	60		60	100	60
6		Heavy	260			210	
7	Clear and secure	Moderate	150	150	170	100	160
8		Light	110	70	110	90	130
9		Inactive					190
10		Heavy					
11	Cordon and search	Moderate	130	190			
12		Light	130	130	190		110
13		Inactive					
14		Heavy					
15	Security	Moderate	190				130
16		Light	170				80
17		Inactive	100				
18		Heavy					
19	Base camp defense	Moderate					
20		Light					
21		Inactive					
22		Heavy					
23	Not under attack	Moderate					
24		Light		40			
25		Inactive					

Table 5-25. Daily Expenditures of Ammunition (Rounds Per Weapon) by Intensity of Mission and Terrain—Continued

z. 7.62-mm Minigun, Assault Helicopter Company

1	1	2	3	4	5	6	7
1	Mission	Intensity of mission	Jungle	Forest/ plantation	Open	Mountainous	Paddy/ marsh
2		Heavy					1,050
3	Reconnaissance in force	Moderate	1,550			3,200	1,050
4		Light	800	800	1,150	850	500
5		Inactive	800			1,200	350
6		Heavy					
7	Clear and secure	Moderate	1,250	600	1,300	1,100	800
8		Light	800	750	1,350	1,550	1,100
9		Inactive					
10		Heavy					
11	Cordon and search	Moderate					
12		Light	900				600
13		Inactive					
14		Heavy					
15	Security	Moderate					
16		Light					
17		Inactive					
18		Heavy					
19	Base camp defense	Moderate					
20		Light					
21		Inactive					
22		Heavy		1,700			
23	Not under attack	Moderate		800			
24		Light	1,400	600			2,650
25		Inactive					

Table 5-25. Daily Expenditures of Ammunition (Rounds Per Weapon) by Intensity of Mission and Terrain—Continued

aa. 5.56-mm Rifle, Infantry Battalion

1	1 Mission	2 Intensity of mission	3 Jungle	4 Forest/ plantation	5 Open	6 Mountainous	7 Paddy/ marsh
2		Heavy	15.0	15.0	--	25.0	25.0
3	Reconnaissance in force	Moderate	13.0	13.0	6.0	12.0	12.0
4		Light	8.0	8.0	7.0	9.0	9.0
5		Inactive	6.0	6.0	5.0	4.0	4.0
6		Heavy					
7	Clear and secure	Moderate	14.0	14.0	6.5	--	17.5
8		Light	5.5	5.5	--	--	11.0
9		Inactive					
10		Heavy					
11	Cordon and search	Moderate	4.0	4.0	4.0	2.0	19.0
12		Light	7.0	7.0	5.5	--	10.0
13		Inactive					
14		Heavy					
15	Security	Moderate	2.5	2.5	--	--	8.5
16		Light	4.5	4.5	--	--	1.0
17		Inactive					
18		Heavy					
19	Base camp defense	Moderate				9.5	--
20		Light				6.5	17.5
21		Inactive				4.0	2.0
22		Heavy					
23	Not under attack	Moderate					
24		Light					
25		Inactive					

Table 5-25. Daily Expenditures of Ammunition (Rounds Per Weapon) by Intensity of Mission and Terrain—Continued

ab. 5.56-mm Rifle, Infantry Battalion (Mechanized) [1]

1	1 Mission	2 Intensity of mission	3 Jungle	4 Forest/ plantation	5 Open	6 Mountainous [1]	7 Paddy/ marsh
2		Heavy	36				
3	Reconnaissance in force	Moderate	13				
4		Light	8	6			5
5		Inactive	3				
6		Heavy					
7	Clear and secure	Moderate	33				
8		Light	8	7			7
9		Inactive					
10		Heavy					
11	Cordon and search	Moderate					
12		Light					
13		Inactive					
14		Heavy					
15	Security	Moderate	8				
16		Light	5	6	17		
17		Inactive	4	4			
18		Heavy					
19	Base camp defense	Moderate					
20		Light					5
21		Inactive	6				5
22		Heavy					
23	Not under attack	Moderate					
24		Light					
25		Inactive					

[1] Daytime rates only. Data are not available to establish nighttime rates.
Data are not available.

Table 5-25. Daily Expenditures of Ammunition (Rounds Per Weapon) by Intensity of Mission and Terrain—Continued

*ac. 5.56-mm Rifle, Airmobile Infantry Battalion**

1	1 Mission	2 Intensity of mission	3 Jungle	4 Forest/ plantation	5 Open	6 Moun- tainous	7 Paddy/ marsh
2		Heavy					
3	Reconnaissance in force	Moderate	6.0	5.5			
4		Light	4.0	2.0	3.5	4.0	2.5
5		Inactive	2.5	1.5			
6		Heavy	17.0				
7	Clear and secure	Moderate	4.0		4.0	7.0	
8		Light	4.0	5.5	3.0	3.5	3.5
9		Inactive	2.5	4.5	3.0		
10		Heavy					
11	Cordon and search	Moderate					
12		Light	4.0			4.0	3.0
13		Inactive					
14		Heavy					
15	Security	Moderate					
16		Light		1.5	3.5		
17		Inactive					
18		Heavy					
19	Base camp defense	Moderate					
20		Light			2.0	3.5	
21		Inactive					
22		Heavy					
23	Not under attack	Moderate					
24		Light					
25		Inactive					

*Daytime rates only. Data are not available to establish nighttime rates.

Table 5-26. Daily Expenditures of Ammunition (Rounds Per Weapon) by Intensity of Mission

a. 90-mm Tank Gun, Amored Cavalry Squadron

1	1 Mission	2 Intensity of mission: Heavy	3 Intensity of mission: Moderate	4 Intensity of mission: Light	5 Intensity of mission: Inactive
2	Reconnaissance in force	3.75	1.75	1.00	----
3	Clear and secure			1.00	0.50
4	Cordon and search			1.25	----
5	Security		2.25	1.00	1.00
6	Base camp defense				----
7	Not under attack				1.75

b. 90-mm Tank Gun, Tank Battalion

1	1 Mission	2 Intensity of mission: Heavy*	3 Intensity of mission: Moderate	4 Intensity of mission: Light	5 Intensity of mission: Inactive
2	Reconnaissance in force		2.0	1.0	----
3	Clear and secure		1.5	1.0	----
4	Cordon and search			0.5	----
5	Security			1.0	1.5
6	Base camp defense			1.0	1.0
7	Not under attack			1.5	1.5

*Data are not available

c. 90-mm Recoilless Rifle, Infantry, Infantry (Mechanized), and Airmobile Infantry Battalions

1	1 Mission	2 Intensity of mission: Heavy	3 Intensity of mission: Moderate	4 Intensity of mission: Light	5 Intensity of mission: Inactive
2	Reconnaissance in force	5.25	4.75	1.50	----
3	Clear and secure		3.50	2.00	----
4	Cordon and search		1.50	1.00	----
5	Security		2.50	1.50	----
6	Base camp defense			1.25	0.75
7	Not under attack				----

Table 5-26. Daily Expenditures of Ammunition (Rounds Per Weapon) by Intensity of Mission—Continued

d. 2.75-Inch Rocket, Aviation Battalion, Infantry Division

1	1 Mission	2 Intensity of mission: Heavy	3 Intensity of mission: Moderate	4 Intensity of mission: Light	5 Intensity of mission: Inactive*
2	Reconnaissance in force	90	90	130	
3	Clear and secure	100	70		
4	Cordon and search				
5	Security		125		
6	Base camp defense				
7	Not under attack				

*Data are not available.

e. 2.75-Inch Rocket, Aerial Rocket Battalion

1	1 Mission	2 Intensity of mission: Heavy	3 Intensity of mission: Moderate	4 Intensity of mission: Light	5 Intensity of mission: Inactive*
2	Reconnaissance in force		1,600	850	
3	Clear and secure		2,400	1,200	
4	Cordon and search				
5	Security				
6	Base camp defense				
7	Not under attack				

*Data are not available.

f. 2.75-Inch Rocket, Assault Helicopter Battalion [1]

1	1 Miss on	2 Intensity of mission: Heavy	3 Intensity of mission: Moderate	4 Intensity of mission: Light	5 Intensity of mission: Inactive [2]
2	Reconniassance in force	105	70	40	
3	Clear and secure		85	35	
4	Cordon and search				
5	Security				
6	Base camp defense				
7	Not under attack		115		

[1] Rates apply to combat assault operation.
[2] Data are not available.

Table 5-26. Daily Expenditures of Ammunition (Rounds Per Weapon) by Intensity of Mission—Continued

g. 2.75-Inch Rocket, Aerial Weapons Company

1	Mission	2	3	4	5
		Intensity of mission			
		Heavy	Moderate	Light	Inactive
2	Reconnaissance in force	170	125	95	----------
3	Clear and secure			200	105
4	Cordon and search			520	----------
5	Security				95
6	Base camp defense				
7	Not under attack				

h. 2.75-Inch Rocket, Aviation Surveillance or Reconnaissance Company

1	Mission	2	3	4	5
		Intensity of mission			
		Heavy*	Moderate	Light	Inactive*
2	Reconnaissance in force		7	15	----------
3	Clear and secure			13	----------
4	Cordon and search				
5	Security			15	----------
6	Base camp defense				
7	Not under attack			8	----------

*Data are not available.

i. 40-mm Armament Subsystem, M5, Aviation Battalion, Infantry Division

1	Mission	2	3	4	5
		Intensity of mission			
		Heavy	Moderate	Light	Inactive*
2	Reconnaissance in force	80	100	65	----------
3	Clear and secure	40	----------		
4	Cordon and search				
5	Security		150	----------	
6	Base camp defense				
7	Not under attack				

*Data are not available.

Table 5-26. Daily Expenditures of Ammunition (Rounds Per Weapon) by Intensity of Mission—Continued

j. 40-mm Armament Subsystem, M5, Aerial Rocket Battalion

1	1 Mission	2 Intensity of mission: Heavy	3 Intensity of mission: Moderate	4 Intensity of mission: Light	5 Intensity of mission: Inactive*
2	Reconnaissance in force		20	20	
3	Clear and secure		10		
4	Cordon and search				
5	Security				
6	Base camp defense				
7	Not under attack				

*Data are not available.

k. 40-mm Armament Subsystem, M5, Assault Helicopter Battalion

1	1 Mission	2 Intensity of mission: Heavy	3 Intensity of mission: Moderate	4 Intensity of mission: Light	5 Intensity of mission: Inactive*
2	Reconnaissance in force	140	110	100	
3	Clear and secure		40		
4	Cordon and search				
5	Security				
6	Base camp defense				
7	Not under attack		30		

*Data are not available.

l. 40-mm Armament Subsystem, M5, Aerial Weapons Company

1	1 Mission	2 Intensity of mission: Heavy	3 Intensity of mission: Moderate	4 Intensity of mission: Light	5 Intensity of mission: Inactive*
2	Reconnaissance in force		60	25	
3	Clear and secure			35	
4	Cordon and search			145	
5	Security				
6	Base camp defense				
7	Not under attack				

*Data are not available.

Table 5-26. Daily Expenditures of Ammunition (Rounds Per Weapon) by Intensity of Mission—Continued

m. 7.62-mm Machinegun, Aviation Battalion, Infantry Division

1	1 Mission	2 Intensity of mission: Heavy	3 Intensity of mission: Moderate	4 Intensity of mission: Light	5 Intensity of mission: Inactive*
2	Reconnaissance in force	225	250	175	
3	Clear and secure	125	100		
4	Cordon and search				
5	Security		75		
6	Base camp defense				
7	Not under attack				

*Data are not available.

n. 7.62-mm Machinegun, Assault Helicopter Battalion

1	1 Mission	2 Intensity of mission: Heavy	3 Intensity of mission: Moderate	4 Intensity of mission: Light	5 Intensity of mission: Inactive
2	Reconnaissance in force	270	89	66	80
3	Clear and secure	56	35	25	
4	Cordon and search				
5	Security		69	22	
6	Base camp defense				
7	Not under attack	55		57	

o. 7.62-mm Machinegun, Assault Support Helicopter Company

1	1 Mission	2 Intensity of mission: Heavy*	3 Intensity of mission: Moderate	4 Intensity of mission: Light	5 Intensity of mission: Inactive
2	Reconnaissance in force		50	35	
3	Clear and secure			15	
4	Cordon and search				
5	Security			30	
6	Base camp defense				
7	Not under attack			50	15

*Data are not available.

Table 5-26. Daily Expenditures of Ammunition (Rounds Per Weapon) by Intensity of Mission—Continued

p. 7.62-mm Minigun, Aviation Battalion, Infantry Division

1	1 Mission	2 Intensity of mission: Heavy	3 Intensity of mission: Moderate	4 Intensity of mission: Light	5 Intensity of mission: Inactive*
2	Reconnaissance in force	600	750	300	----
3	Clear and secure	1,150	----	----	----
4	Cordon and search	300	----	----	----
5	Security	----	950	----	----
6	Base camp defense	----	----	----	----
7	Not under attack	----	----	----	----

*Data are not available.

q. 7.62-mm Minigun, Assault Helicopter Battalion

1	1 Mission	2 Intensity of mission: Heavy	3 Intensity of mission: Moderate	4 Intensity of mission: Light	5 Intensity of mission: Inactive*
2	Reconnaissance	----	275	----	----
3	Clear and secure	----	275	200	----
4	Cordon and search	----	----	----	----
5	Security	----	----	----	----
6	Base camp defense	----	----	----	----
7	Not under attack	----	375	----	----

*Data are not available.

r. 7.62-mm Minigun, Aerial Weapons Company

1	1 Mission	2 Intensity of mission: Heavy*	3 Intensity of mission: Moderate	4 Intensity of mission: Light	5 Intensity of mission: Inactive
2	Reconnaissance in force	----	300	150	----
3	Clear and secure	----	----	210	----
4	Cordon and search	----	----	600	----
5	Security	----	----	----	920
6	Base camp defense	----	----	----	----
7	Not under attack	----	----	----	----

*Data are not available.

Table 5-26. Daily Expenditures of Ammunition (Rounds Per Weapon) by Intensity of Mission—Continued

s. Fragmentation Grenades, Infantry Battalion

1	1 Mission	2 Intensity of mission: Heavy	3 Intensity of mission: Moderate	4 Intensity of mission: Light	5 Intensity of mission: Inactive
2	Reconnaissance in force	100	75	45	35
3	Clear and secure		75	55	35
4	Cordon and search				
5	Security		15	35	30
6	Base camp defense			35	40
7	Not under attack				

t. Fragmentation Grenades, Airmobile Infantry Battalion

1	1 Mission	2 Intensity of mission: Heavy	3 Intensity of mission: Moderate	4 Intensity of mission: Light	5 Intensity of mission: Inactive
2	Reconnaissance in force	130	55	45	50
3	Clear and secure		60	45	
4	Cordon and search				
5	Security			55	60
6	Base camp defense			60	
7	Not under attack				

u. Smoke Grenades (All Colors), Infantry Battalion

1	1 Mission	2 Intensity of mission: Heavy	3 Intensity of mission: Moderate	4 Intensity of mission: Light	5 Intensity of mission: Inactive
2	Reconnaissance in force	115	65	50	30
3	Clear and secure		65	55	80
4	Cordon and search				
5	Security		30	45	30
6	Base camp defense		50	45	35
7	Not under attack				

Table 5-26. Daily Expenditures of Ammunition (Rounds Per Weapon) by Intensity of Mission—Continued

v. Smoke Grenades (All Colors), Airmobile Infantry Battalion

1	1 Mission	2	3	4	5
		Intensity of mission			
		Heavy	Moderate	Light	Inactive
2	Reconnaissance in force	70	45	35	40
3	Clear and secure		65	35	
4	Cordon and search				
5	Security			35	40
6	Base camp defense			25	40
7	Not under attack				

5-18. Ammunition Basic Load

a. To calculate the total weight of the ammunition basic load for a TOE unit, the planner should follow the steps in the subparagraphs below.

(1) Prepare a table in outline with the columnar headings shown in table 5-28.

(2) In column 1—

(*a*) List the unit and type of munition from the TOE, to include all weapons and missiles.

(*b*) Add nonweapon items as provided for in table 5-27.

(3) In column 4, list number of weapons authorized by the TOE.*

* The number of major items authorized may be obtained from chapter 1 tables. For all other major items and all secondary items, the TOE should be used.

(4) In column 2, list round per weapon from table 5-27. Distinguish allowance per unit category, if applicable. (Identify the unit category from section I of its TOE.)

(5) In columns 3, 6, 8, and 10, list remaining data from table 5-27.

(6) Multiply weights (colm 7, 9, and 11) and add for each line of column 12.

(7) Add column 12; divide by 2,000 to obtain STON.

b. Tables 5-28 and 5-29 are sample basic loads for the infantry battalion, separate light infantry brigade (TOE 7-175G), and the field artillery battalion, 175-mm, self-propelled (TOE 7-435G), respectively.

Table 5-27. Ammunition Basic Load Guide

1	1 LIN	2 Weapon/equipment	3 Unit category	4 Rd per wpn	5 Packed wt per rd (lb)	6 Rd per wpn carried on indiv	7 Rd per wpn carried on veh	8 Rd per wpn bulk loaded	9 Remarks
2	A89819	Armt pod, acft, 7.62-mm mg, with equip, XM18.		6,000	0.093		1,500	4,500	
3	A90117	Armt subsys, hel, 7.62-mm mg, lt, M23		4,200	0,093		1,200	3,000	
4	A90122	Armt subsys, hel, 7.62-mm mg, M24		4,200	0.093		1,200	3,000	
5	A90154	Armt subsys, hel, 7.62-mm mg, XM27		4,500	0.093		1,500	3,000	
6	A90186	Armt subsys, hel, 7.62-mm mg, twin, M2		6,500	0.093		1,300	5,200	
7	A90323	Armt subsys, hel, 7.62-mm mg, quad, M6		18,000	0.093		6,000	12,000	
8	A90343	Armt subsys, hel, 7.62-mm mg, XM41		4,200	0.093		1,200	3,000	
	A90391	Armt subsys, hel, 7.62-mm mg/2.75-in RL, M16:							
9	A90323	Mg, 7.62-mm		14,700	0.093		6,000	8,700	
10	L45016	Lchr, HE, 2.75-in.		42	27.000		14	28	
	A90426	Armt subsys, hel, 7.62-mm mg/2.75-in RL, M21:							
11	A90186	Mg, 7.62-mm		21,000	0.093		6,000	15,000	
12	A90391	Lchr, HE, 2.75-in		42	27.000		14	28	
	A90436	Armt subsys, hel, 7.62-mm mg/40-mm GL, high-rate, XM28:							
13	A90186	Mg, 7.62-mm		2,250	0.093		750	1,500	
14	-------	Lchr, gren, 40-mm		321	0.750		107	214	
15	A90460	Armt subsys, hel, 40-mm GL, M5		321	0.750		107	214	
16	Z06071	Armt subsys, hel, 40-mm GL, XM8		450	0.750		150	300	
17	A90597	Armt subsys, hel, 2.75-in. RL, XM3		144	27.000		48	96	
18	-------	Rkt, HE		(101)			(34)	(67)	
19	-------	Rkt, WP		(29)			(10)	(19)	
20	-------	Rkt, smoke		(14)			(4)	(10)	
21	-------	Armt subsys, hel, 2.75-in. RL, XM4		144	27.000		48	96	
22	A90871	Armt subsys, hel, GM lchr, M22			112.000				See note 1.
23	-------	Armt subsys, hel, 7.62-mm mg, XM7		5,250	0.093		1,500	3,750	
	A93124	ARAAV, M551:							
24	-------	Air sur atk mg, mtd, SlB (Shillelagh)		20	120.000		10	10	
25	-------	Ctg, 152-mm		40	60.000		20	20	
26	-------	HEAT-MP		(40)					
27	-------	Lchr, hand gren, smoke, SM176		16	0.750		8	8	
28	L91838	Mg, cal .50		1,000	0.395		1,000		
29	L92352	Mg, 7.62-mm		3,000	0.093		3,000		
30	U56346	Smg, cal .45		360	0.056		360		
31	B86589	Bolt, explo		36	3.330		6	30	
32	C39059	Burster, fld, incd		40	2.500			40	See note 2.
	D10725	Carr, 81-mm mort, FTRAC, M125A1:							
33	H71344	Flare, sur, trip		10	1.940		10		
34	-------	Fuze, proximity		31	3.840		16	15	
35	-------	Fuze, pt-detonating		4	3.840		2	2	
36	J77532	Gren, hand, frag		8	2.125		8		

See notes below table.

Table 5-27. Ammunition Basic Load Guide—Continued

1	1 LIN	2 Weapon/equipment	3 Unit category	4 Rd per wpn	5 Packed wt per rd (lb)	6 Rd per wpn carried on indiv	7 Rd per wpn carried on veh	7 Rd per wpn bulk loaded	9 Remarks
37	L91838	Mg, cal .50		2,100	0.395		525	1,575	
38	-------	Proj, 81-mm		155	17.320		114	41	
39	-------	HE, with fuze		(105)					
40	-------	HE, without fuze		(31)					
41	-------	WP		(14)					
42	-------	Illuminating		(5)					
	D10740	Carr, 107-mm mort, SP, M106:							
43	H71344	Flare, sur, trip		10	1.940		10		
44	-------	Fuze, proximity		46	3.840		23	23	
45	-------	Fuze, pt-detonating		12	3.840		12		
46	J77532	Gren, hand, frag		8	2.125		8		
47	L91838	Mg, cal .50		2,205	0.395		2,205		
48	-------	Proj, 107-mm		163	40.000		83	80	
49	-------	HE, with fuze		(81)					
50	-------	HE, without fuze		(46)					
51	-------	WP		(31)					
52	-------	Illuminating		(5)					
53	D11048	Carr, cgo, tracked, 6-ton, M548							No armt will carry— 36 8-in. rd 36 175-mm rd 80 155-mm rd 200 105-mm rd
	D11401	Carr, comd and recon, armd, M114:							
54	H71344	Flare, sur, trip		12	1.940		12		
55	J77532	Gren, hand, frag		8	2.125		8		
56	L91838	Mg, cal .50		945	0.395		945		
57	L92352	Mg, 7.62-mm		2,970	0.093		2,970		
	D11538	Carr, CP, lt, tracked, M577:							
58	H71344	Flare, sur, trip		12	1.940		12		
59	J77532	Gren, hand, frag		20	2.125		20		
	D12086	Carr, pers, FTRAC, armd, M113:							
60	H71344	Flare, sur, trip		12	1.940		12		
61	J77532	Gren, hand, frag		20	2.125		20		
62	L91838	Mg, cal .50		1,995	0.395		1,995		
	E56577	CEV, with gun, 165-mm, M728 (T118):							
63	-------	Ctg, 165-mm		60	92.400		30	30	
64	H71344	Flare, sur, trip		10	1.940		10		
65	J77532	Gren, hand, frag		8	2.125		8		
66	L92112	Mg, cal .50		735	0.395		735		
67	L92352	Mg, 7.62-mm		3,410	0.093		3,410		
	F91490	Dml set, explo, initiating, elec and semielec:							
68	D00599	Cap, blasting, sp, elec		50	0.005			50	
69	D00873	Cap, blasting, sp, nonelec		50	0.005			50	

70	D93182	Chg, dml, M5A1, block, comp C–4, 2-1/2 lb.		40	3.330			40	
71	D93730	Chg, dml, block, TNT, 1-lb		50	1.450			50	
72	F14986	Cord, detonating, PETN		500 ft	0.0184 ft			9	
73	G01293	Destructor, explo		5	1.560			5	
74	J07059	Fuze, blasting, time		100 ft	0.0235 ft			2	
75	K67317	Igniter, time, blasting fuze		50	0.188			50	
	-------	Dml set, explo, initiating, elec and nonelec:							
76	D00599	Cap, blasting, sp, elec		50	0.005			50	
77	D00873	Cap, blasting, sp, nonelec		50	0.005			50	
78	D93182	Chg, dml, M5A1, block, comp C–4, 2-1/2-lb.		40	3.330			40	
79	D93730	Chg, dml, block, TNT, 1-lb		50	1.450			50	
80	F14986	Cord, detonating, PETN		500 ft	0.0184 ft			9	
81	G01293	Destructor, explo		5	1.560			5	
82	J07059	Fuze, blasting, time		100 ft	0.0235 ft			2	
83	K67317	Igniter, time, blasting fuze		50	0.188			50	
	-------	Dml set, explo, initiating, nonelec:							
84	D00873	Cap, blasting, sp, nonelec		50	0.005			50	
85	D93182	Chg, dml, M5A1, block, comp C–4, 2-1/2-lb.		40	3.330			40	
86	F41986	Cord, detonating, PETN		200 ft	0.0184 ft			4	
87	G01293	Destructor, explo		2	1.560			2	
88	J07059	Fuze, blasting, time		100 ft	0.0235 ft			2	
89	K67317	Igniter, time, blasting fuze		50	0.188			50	
	G22109	Disperser, riot con agt, hel- or veh-mtd:							
90	-------	Riot con agt, CS1		240 lb	1.080			240 lb	See note 3.
	G22246	Disperser, riot con agt, ptbl:							
91	-------	Riot con agt, CS1		64 lb	1.080			64 lb	See note 4.
	H68083	Flamethrower, ptbl:							
92	K67817	Ignition cyl, flamethrower		8	0.280			8	See note 5.
93	-------	Peptizer (1-gal can)		1	8.000			1	See notes 6 and 7.
94	W12352	Thickener, incd oil (5-lb can)		2	5.000			2	See notes 8 and 9.
95	H71344	Flare, sur, trip			1.940			All	1 per 10 indiv in cat I units, less crewmen of vehs otherwise auth; 10 per acft.
	-------	Genr, smoke, mech:							
96	-------	Fog oil, SGF2 (55-gal drum)		3	461.000			3	
97	-------	Gas (5-gal can)		2	42.000			2	
98	J77532	Gren, hand, frag, comp B	I and II		2.125	All			1 per indiv in cat I and II units.
99	J77532	Gren, hand, frag, comp B	III		2.125	All			1 per 3 indiv in cat III units.
100	J77763	Gren, hand, incd			2.940				See note 10.
101	J79407	Gren, hand, riot, CN–DM			2.060				See note 11.
102	J79544	Gren, hand, riot, CS			1.875				See note 12.
103	J79681	Gren, hand, smoke, HC			2.560				See note 13.

See notes below table.

Table 5-27. Ammunition Basic Load Guide—Continued

1	1	2	3	4	5	6	7	8	9
	LIN	Weapon/equipment	Unit category	Rd per wpn	Packed wt per rd (lb)	Rd per wpn carried on indiv	Rd per wpn carried on veh	Rd per wpn bulk loaded	Remarks
104	J79818	Gren, hand, smoke, colored			1.360				See note 14.
105	J78757	Gren, hand, riot, CS1			1.000				See note 15.
106	J77501	Gren, hand, riot, DM1			1.000				See note 16.
107	J80092	Gren, hand and rifle, smoke, WP			2.625				See note 17.
108	------	GM, at, with HEAT, 130-mm		15	112.000		15		15 rd per launching sta.
109	------	GM, sur atk (PSG)		5	19,501.000		1	4	
	------	GM sys, intcp, aerial, carr-mtd (CHAP), M548:							
110	H71344	Flare, sur, trip		12	1.940		12		
111	J77532	Gren, hand, frag		20	2.125		20		
112	------	Msl		12	187.000		8	4	
113	------	GM sys, intcp, aerial, XM41E2 (Redeye)			29.300	3	3		6 rd per each 2 gunners.
114	J96694	Gun, antiaircraft arty, SP, 20-mm, XM163 (Vulcan).		6,000	1.000		1,800	4,200	
115	J96845	Gun, antiaircraft arty, towed, 20-mm, XM167 (Vulcan).		4,000	1.000		300	3,700	
	J96819	Gun, antiaircraft arty, SP, 40-mm, M42 or M42A1:							
116	------	Ctg, 40-mm		720	6.600		480	240	
117	H71344	Flare, sur, trip		12	1.940		12		
118	J77532	Gren, hand, frag		8	2.125		8		
119	L92352	Mg, 7.62-mm		1,750	0.093		1,750		
	J97230	Gun, FA, SP, 175-mm, M107:							
120	------	Additive jacket		86			2	84	
121	D97155	Chg, propelling		120	114.000		2	118	
122	H71344	Flare, sur, trip		10	1.940		10		
123	------	Fuze		125	3.313		2	123	
124	------	Proximity		(37)					
125	------	Pt-detonating		(53)					
126	------	MTSQ		(35)					
127	J77532	Gren, hand, frag		8	2.125		8		
128	------	Primer		120	0.092		2	118	
129	P74433	Proj, 175-mm		114	158.000		2	112	
130	------	HE		(114)					
	K56981	How, hv, SP, 8-in., M110:							
131	------	Chg, propelling		158	47.940		3	155	
132	------	White bag		(126)					
133	------	Green bag		(32)					
134	H71344	Flare, sur, trip		10	1.940		10		
135	------	Fuze		165	3.490		3	162	
136	------	Proximity		(52)					
137	------	Pt-detonating		(60)					
138	------	MTSQ		(38)					
139	------	Concrete-piercing		(15)					

140	J77532	Green, hand, frag		8	2.125		8	
141	-------	Primer		158	0.092		3	155
142	-------	Proj		150	211.000		2	148
143	-------	HE		(150)				
144	-------	Reducer, flash, M3		126			3	126
	K57118	How, hv, towed, 8-in, M115:						
145	-------	Chg, propelling		105	47.940		20	85
146	-------	White bag		(21)				
147	-------	Green bag		(84)				
148	-------	Fuze		110	3.940		20	90
149	-------	Proximity		(33)				
150	-------	Pt-detonating		(37)				
151	-------	MTSQ		(30)				
152	-------	Concrete-piercing		(10)				
153	-------	Primer		105	0.092		20	85
154	-------	Proj		100	211.000		20	80
155	-------	HE		(100)				
156	-------	Reducer, flash, M3		21			5	16
	K57255	How, lt, SP, 105-mm, M108:						
157	-------	Ctg, 105-mm		250	65.000		56	194
158	-------	HE, wiothout fuze		(215)				
159	-------	HEAT		(3)				
160	-------	HCBE		(4)				
161	-------	WP		(25)				
162	-------	Illuminating		(2)				
163	-------	Smoke		(1)				
164	H71344	Flare, sur, trip		12	1.940		12	
165	-------	Fuze		245	3.470		56	189
166	-------	Proximity		(75)				
167	-------	Pt-detonating		(113)				
168	-------	MTSQ		(54)				
169	-------	Concrete-piercing		(3)				
170	J77532	Gren, hand, frag		10	2.125		10	
171	L92112	Mg, cal .50		630	0.395		630	
	K57392	How, lt, towed, 105-mm, M102:						
172	-------	Ctg, 105-mm		190	65.000		40	150
173	-------	HE, without fuze		(163)				
174	-------	HEAT		(2)				
175	-------	HCBE		(3)				
176	-------	WP		(19)				
177	-------	Illuminating		(2)				
178	-------	Smoke		(1)				
179	-------	Fuze		183	3.470		40	143
180	-------	Proximity		(57)				
181	-------	Pt-detonating		(83)				
182	-------	MTSQ		(41)				
183	-------	Concrete-piercing		(2)				

See notes below table.

Table 5-27. Ammunition Basic Load Guide—Continued

1	1	2	3	4	5	6	7	7	9
1	LIN	Weapon/equipment	Unit category	Rd per wpn	Packed wt per rd (lb)	Rd per wpn carried on indiv	Rd per wpn carried on veh	Rd per wpn bulk loaded	Remarks
	K57529	How, towed, 105-mm, M101:							
184	-------	Ctg, 105-mm	----------	200	65.000	----------	60	140	----------
185	-------	HE, without fuze	----------	(172)	----------	----------	----------	----------	----------
186	-------	HEAT, with fuze	----------	(2)	----------	----------	----------	----------	----------
187	-------	HCBE, with fuze	----------	(3)	----------	----------	----------	----------	----------
188	-------	WP, with fuze	----------	(20)	----------	----------	----------	----------	----------
189	-------	Illuminating, with fuze	----------	(2)	----------	----------	----------	----------	----------
190	-------	Smoke, with fuze	----------	(1)	----------	----------	----------	----------	----------
191	-------	Fuze	----------	181	3.470	----------	40	141	----------
192	-------	Proximity	----------	(57)	----------	----------	----------	----------	----------
193	-------	Pt-detonating	----------	(82)	----------	----------	----------	----------	----------
194	-------	MTSQ	----------	(40)	----------	----------	----------	----------	----------
195	-------	Concrete-piercing	----------	(2)	----------	----------	----------	----------	----------
	K57666	How, mdm, SP, 155-mm, M109:							
196	-------	Chg, propelling	----------	289	29.386	----------	110	179	----------
197	-------	White bag	----------	(275)	----------	----------	----------	----------	----------
198	-------	Green bag	----------	(14)	----------	----------	----------	----------	----------
199	H71344	Flare, sur, trip	----------	10	1.940	----------	10	----------	----------
200	-------	Fuze	----------	333	3.313	----------	127	206	----------
201	-------	Proximity	----------	(97)	----------	----------	----------	----------	----------
202	-------	Pt-detonating	----------	(120)	----------	----------	----------	----------	----------
203	-------	MTSQ	----------	(106)	----------	----------	----------	----------	----------
204	-------	Concrete-piercing	----------	(10)	----------	----------	----------	----------	----------
205	J77532	Gren, hand, frag	----------	8	2.125	----------	8	----------	----------
206	L92112	Mg, cal .50	----------	630	0.395	----------	525	105	----------
207	-------	Primer	----------	289	0.092	----------	32	257	----------
208	-------	Proj, 155-mm	----------	275	103.040	----------	108	167	----------
209	-------	HE	----------	(236)	----------	----------	----------	----------	----------
210	-------	HCBE	----------	(6)	----------	----------	----------	----------	----------
211	-------	WP	----------	(23)	----------	----------	----------	----------	----------
212	-------	Illuminating	----------	(8)	----------	----------	----------	----------	----------
213	-------	Smoke	----------	(2)	----------	----------	----------	----------	----------
214	K57803	How, mdm, towed, 155-mm, M114	----------	----------	----------	----------	----------	----------	See note 18.
215	-------	Chg, propelling	----------	158	29.386	----------	30	128	----------
216	-------	White bag	----------	(150)	----------	----------	----------	----------	----------
217	-------	Green bag	----------	(8)	----------	----------	----------	----------	----------
218	-------	Fuze	----------	182	3.313	----------	36	146	----------
219	-------	Proximity	----------	(54)	----------	----------	----------	----------	----------
220	-------	Pt-detonating	----------	(66)	----------	----------	----------	----------	----------
221	-------	MTSQ	----------	(57)	----------	----------	----------	----------	----------
222	-------	Concrete-piercing	----------	(5)	----------	----------	----------	----------	----------
223	-------	Primer	----------	158	0.092	----------	30	128	----------
224	-------	Proj, 155-mm	----------	150	103.440	----------	28	122	----------

225	-------	HE		(129)					
226	-------	HCBE		(3)					
227	-------	WP		(13)					
228	-------	Illuminating		(4)					
229	-------	Smoke		(1)					
	-------	Lchr, brg, M60 or M48:							
230	H71344	Flare, sur, trip		16	1.940		16		
231	J77532	Gren, hand, frag		8	2.125		8		
232	L44575	Lchr, gren, 40-mm, M79	I	30	0.750	18	6	6	
233	L44575	Lchr, gren, 40-mm, M79	II and III	10	0.750	10			
234	L44629	Lchr, GM, carr-mtd (Hawk)			3,200.000				6 rd per lchr.
235	L44712	Lchr, GM (HERC)			18,100.000				2 msl per lchr; 72 msl per bn; 18 msl per btry.
236	L45123	Lchr, rkt, multiple, 115-mm			93.330				See note 19.
237	L45534	Lchr, rkt, 762-mm, trk-mtd (HJ)		4	6,060.000		4		
238	L45260	Lchr, rkt, 3.5-in							See note 20.
239	L46729	Lchr, GM (SGT)			12,473.000				2 msl per firing btry.
240	L90742	Mg, cal .30, lt, flex, M1919A6		3,000	0.089	500	1,500	1,000	
241	L90879	Mg, cal .30, veh, lt		3,000	0.089	500	1,500	1,000	
242	L91975	Mg, cal .50, hv-bbl, flex, for gnd use, M2	I	630	0.395		420	210	
243	L91975	Mg, cal .50, hv-bbl, flex, for gnd use, M2	II and III	525	0.395		525		
244	L92249	Mg, 7.62-mm, acft, lt		6,500	0.093		1,300	5,200	
245	L92386	Mg, 7.62-mm, lt, flex, M60	I	3,080	0.093	880	1,320	880	Less arty units.
246	L92386	Mg, 7.62-mm, lt, flex, M60	I	1,760	0.093		880	880	Arty units only.
247	L92386	Mg, 7.62-mm, lt, flex, M60	II and III	2,200	0.093		2,200		
248	M45945	Mine, apers, M14, nonmetallic			0.490			All	See note 21.
249	M46082	Mine, apers, M16-series			11.200			All	See note 22.
250	M46219	Mine, apers, M18			6.800			All	See note 23.
251	M48137	Mine, at, M21			22.700			All	See note 24.
252	M67871	Mort, 60-mm, on mount		240	5.250		120	120	
	M68008	Mort, 81-mm, on mount:							
253	-------	Fuze, proximity		24	3.840		12	12	
254	-------	Fuze, pt-detonating		12	3.250		12		
255	-------	Proj, 81-mm		120	17.320		80	40	
256	-------	HE, with fuze		(81)					
257	-------	HE, without fuze		(24)					
258	-------	WP, with fuze		(11)					
259	-------	Illuminating		(4)					
	M68282	Mort, 4.2-in., on mount:							
260	-------	Fuze, proximity		45	3.840		23	22	
261	-------	Fuze, pt-detonating		11	3.250		11		
262	-------	Proj		160	40.000		50	110	
263	-------	HE, with fuze		(80)					
264	-------	HE, without fuze		(45)					
265	-------	WP, with fuze		(30)					
266	-------	Illuminating, with fuze		(5)					
267	N96741	Pistol, cal .45		21	0.056	21			

See notes below table.

Table 5-27. Ammunition Basic Load Guide—Continued

1	1	2	3	4	5	6	7	8	9
1	LIN	Weapon/equipment	Unit category	Rd per wpn	Packed wt per rd (lb)	Rd per wpn carried on indiv	Rd per wpn carried on veh	Rd per wpn bulk loaded	Remarks
268	N97015	Pistol, pyrotechnic		48	0.630		17	31	
	R50543	Recov veh, FTRAC, lt, armd, M578:							
269	H71344	Flare, sur, trip		16	1.940		16		
270	J77532	Gren, hand, frag		8	2.125		8		
271	L91838	Mg, cal .50		525	0.395		525		
	R50680	Recov veh, FTRAC, mdm, M88:							
272	H71344	Flare, sur, trip		12	1.940		12		
273	J77532	Gren, hand, frag		8	2.125		8		
274	L91838	Mg, cal .50		1,470	0.395		1,470		
275	R91244	Revolver, cal .38		18	0.038	18			
276	R94840	Rifle, cal .22, coml, tng, gr, M13		400	0.010		400		
	R94977	Rifle, 5.56-mm:							
277		Ctg, 5.56-mm	I	450	0.042	140	310		Less arty units.
278		Ball		(360)					
279		Tracer		(90)					
	R94977	Rifle, 5.56-mm:							
280		Ctg, 5.56-mm	II and III	200	0.042	140	60		Incl arty units.
281		Ball		(160)					
282		Tracer		(40)					
	R95114	Rifle, 7.62-mm, without bipod:							
283		Ctg, 7.62-mm	I	340	0.083	100	120	120	Less arty units.
284		Ball		(306)					See note 25.
285		Tracer		(34)					
	R95114	Rifle, 7.62-mm, without bipod:							
286		Ctg, 7.62-mm	II and III	160	0.083	100	60		Incl arty units.
287		Ball		(144)					
288		Tracer		(16)					See note 26.
	R95251	Rifle, 7.62-mm, with bipod:							
289		Ctg, 7.62-mm	All	760	0.083	160	420	180	
290		Ball		(608)					See note 27.
291		Tracer		(152)					
292	R95799	Rifle, cal .30, snipers		244	0.094	100	44	100	
	R96073	Rifle, cal .30, auto, Browning, M1918A2:							
293		Ctg, cal .30		1,000	0.085	240	260	500	
294		Ball		(800)					
295		Tracer		(200)					
296		Rifle, cal .50, spotter		220	0.331		110	110	
297	R96210	Rifle, rcl, 57-mm		12	11.000		6	6	
	R96484	Rifle, rcl, 90-mm:							
298		Ctg, 90-mm		18	27.500		12	6	
299		HEAT		(18)					
	R96758	Rifle, rcl, 106-mm, on mount, M40A1:							
300		Ctg, 106-mm		30	60.000		17	13	

301	-------	HEAT		(15)					
302	-------	HEP-T		(15)					
303	S04958	Rkt, HE, at, 66-mm, M72	I		7.800	2	4		6 rd per 3.5-in. RL. See note 20.
304	S04958	Rkt, HE, at, 66-mm, M72	II and III		7.800	1	2		3 rd per 3.5-in. RL. See note 20.
305	T39233	Shotgun, 12-gage, riot-type		10	0.138	10			
306	T84657	Smokepot, fltg, SGF2			37.000			All	See note 28.
307	T84687	Smokepot, with HC mixture			54.000			All	See note 29.
308	U30201	Starter, fire, NP3, M2			0.070			All	See note 30.
309	U56346	Smg, cal .45		180	0.056	180			
	V12826	Tk, cbt, FTRAC, 76-mm gun:							
310	-------	Ctg, 76-mm		70	42.000		65	5	
311	-------	HE-T, with fuze, pt-detonating		(40)					
312	-------	HEAT, with fuze, PIBD		(6)					
313	-------	WP, with fuze, pt-detonating		(6)					
314	-------	AP-T		(15)					
315	-------	Cannister		(3)					
316	H71344	Flare, sur, trip		12	1.940		12		
317	J77532	Gren, hand, frag		18	2.125		18		
318	L91838	Mg, cal .50		2,175	0.395		2,175		
319	L92352	Mg, 7.62-mm		5,000	0.093		5,000		
	V12963	Tk, cbt, FTRAC, 90-mm gun:							
320	-------	Ctg, 90-mm		62	62.780		62		
321	-------	HE-T, with fuze, pt-detonating		(38)					
322	-------	HEAT-T, with fuze, PIBD		(7)					
323	-------	WP, with fuze, pt-detonating		(4)					
324	-------	AP-T		(11)					
325	-------	Cannister		(2)					
326	H71344	Flare, sur, trip		12	1.940		12		
327	J77532	Gren, hand, frag		8	2.125		8		
328	L91838	Mg, cal .50		630	0.395		630		
329	L92352	Mg, 7.62-mm		5,940	0.093		5,940		
	V13100	Tk, cbt, FTRAC, 105-mm gun:							
330	-------	Ctg, 105-mm		78	68.490		57	21	
331	-------	HEAT-T, with fuze, PIBD		(23)					
332	-------	HEP-T, with fuze, base-detonating		(16)					
333	-------	APDS-T		(23)					
334	-------	WP, with fuze, pt-detonating		(16)					
335	H71344	Flare, sur, trip		12	1.940		12		
336	J77532	Gren, hand, frag		8	2.125		8		
337	L91838	Mg, cal .50		1,260	0.395		840	420	
338	L92352	Mg, 7.62-mm		5,940	0.083		5,940		

See notes on next page.

NOTES

1. Requires explosive bolts (FSN 1375–885–3480) issued on a one-for-one basis. M22 basic load will be computed based on the following:

Avn bn (as appl)	Basic load 12	6 bolts per helicopter	6 bolts bulk
Cav sqdn (as appl)	Basic load 86	6 bolts per helicopter	30 bolts bulk
FA bn, aerial FA, TOE 6–725T	Basic load 18	6 bolts per helicopter	12 bolts bulk

2. Basis for computation: 40 per airborne infantry, infantry, or tank battalion.

3. Basis for computation: 240 pounds per helicopter- or vehicle-mounted disperser.

4. Basis for computation: 64 pounds per portable disperser.

5. Basis for computation: 8 per portable flamethrower.

6. Peptizer (ethylhexanoic acid (FSN 6810–965–2310)) should be considered under caliber .60 ammunition.

7. Basis for computation: 1 can per portable flamethrower.

8. Thickener, incendiary oil, should be considered under caliber .60 ammunition.

9. Basis for computation: 2 cans per portable flamethrower.

10. Basis for computation:
1 per field safe.
2 per fuel-consuming motor vehicle, less track-laying vehicles.
2 per crew-served weapon, less machinegun and rocket launcher.
2 per cryptographic device not otherwise authorized.
2 per major item of equipment considered a candidate for incendiary destruction.
2 per Army aircraft.
4 per track-laying vehicle.
4 per watercraft.

11. Basis for computation:
48 per military police company.
82 per company-size unit not otherwise authorized, when designated for riot control.

12. Basis for computation:
160 per military police company.
208 per company-size unit not otherwise authorized, when designated for riot control.

13. Basis for computation:
2 per Army aircraft.
8 per company, battalion, or similar-size unit not otherwise authorized.
48 per category I unit.

14. Basis for computation:
4 per Army aircraft (1 each color).
16 per airborne infantry, infantry, and tank platoon (4 each color).
16 per platoon (4 each color).
16 per military police platoon or detachment (4 each color).
48 per reconnaissance company (12 each color).
82 per company, battery, or similar-size unit not otherwise authorized (8 each color).

15. Basis for computation:
850 per military police company.
250 per company-size unit not otherwise authorized, when designated for riot control.

16. Basis for computation:
200 per military police company.
150 per company-size unit not otherwise authorized, when designated for riot control.

17. Basis for computation: 16 per airborne infantry, infantry, or tank platoon.

18. Basis for computation: Battery equipped with howitzer, 155-mm, self-propelled, M109, in lieu of howitzer, 155-mm, towed, M114, use data in line items 196—218.

19. Under the provisions of CONARC Pam 700–1, October 1968, paragraph 6–7, toxic munitions will not be requisitioned.

20. Per DA decision, 7 November 1966, the M72 (rkt, 66-mm, LAW) is to be issued in lieu of the 3.5-inch rocket launcher. If a unit is equipped with the 8.5-inch rocket launcher, the rounds authorized will he equal to the authorization for the M72. Weight of the 8.5-inch round is 18.8 pounds.

21. Basis for computation: 1 per 15 individuals in category I units.

22. Basis for computation: 1 per 30 individuals in category I units plus 40 additional in nondivisional engineer units.

23. Basis for computation:
10 per artillery battalion and nondivisional engineer battalion.
2 per full-tracked vehicle in armored and infantry (mechanized) units and separate engineer companies.
15 per engineer battalion in airborne, infantry, and armored divisions.

24. Basis for computation:
1 per 10 individuals in category I units in airborne, airmobile, and infantry divisions and artillery battalions.
2 per 5 individuals in category I units of armored and infantry (mechanized) divisions, armored cavalry regiments, and separate tank and infantry (mechanized) battalions.

	520 per engineer battalion in armored and infantry (mechanized) divisions. 100 per engineer battalion in airborne, airmobile, and infantry divisions. 40 per nondivisional engineer battalion.
25. Basis for computation:	Units equipped with rifle, 5.56-mm, in lieu of rifle, 7.62-mm, use data in line item 266.
26. Basis for computation:	Units equipped with rifle, 5.56-mm, in lieu of rifle, 7.62-mm, use data in line item 269.
27. Basis for computation:	Category I units equipped with rifle, 5.56-mm, in lieu of rifle, 7.62-mm, use data in line item 266. Category II and III units equipped with rifle, 5.56-mm, in lieu of rifle, 7.62-mm, use data in line item 269.
28. Basis for computation:	2 per chemical smoke generator. 6 per company, engineer combat battalion. 8 per engineer floating, panel, or pontoon bridge company.
29. Basis for computation:	2 per chemical smoke generator. 6 per airborne infantry, infantry, or tank company and field artillery battery. 10 per company, engineer combat battalion. 12 per engineer floating, panel, or pontoon bridge company.
30. Basis for computation:	2 per platoon or similar-size unit (40 men).

Section IV. CLASS VII SUPPLY, MAJOR END ITEMS—DIMENSIONS AND WEIGHTS

5–19. General

This section provides dimensional and weight data of equipment contained in field army units. Distribution of this equipment among the units is tabulated in chapter 1. Tables 5–30 through 5–37 list major end items of class VII by subclasses. As stated in SB 700–20, consideration has been given primarily to figures contained in TB 55–46–1 and, secondarily, to SB 700–20 and other sources. It should be noted that this section provides a representative list of TOE equipment, not a complete list.

5–20. Special Notes

a. Dimensions in tables 5–30 through 5–37, columns, 4, and 5, are the maximum length, width, and height in feet of fully assembled equipment in travel position. For purposes of this manual, these are the operational dimensions. Reduced dimensions (colm 6, 7, and 8) for aircraft, tactical vehicles, and ground support equipment are minimum shipping dimensions, i.e., by securing antennas; removing canvas tops, frames, and bows; and folding the windshields. For purposes of this manual, these are the dimensions for air shipment overseas; also, for convenience of reading the tables, operational dimensions are repeated in the reduced-dimension columns when no change is indicated (as for example, when the item is not reducible).

b. Weights of noncombat vehicles are for unloaded vehicles. Weights of combat vehicles are fighting (loaded) weights (exclusive of ammunition).

c. Measurement tons (MTON) represent the volume of the reduced-dimension item, i.e., the reduced cubic feet divided by 40.

d. Major end items of supply classification other than class VII are listed under their respective classes.

Table 5–28. Basic Load of Ammunition—Example for an Infantry Unit

1	1 Unit and type of munition	2 Rd per wpn	3 Packed wt per rd (lb)	4 Total wpn	5 Total rd	6 Carried on indiv: Rd per wpn	7 Carried on indiv: Total wt (lb)	8 Carried on veh: Rd per wpn	9 Carried on veh: Total wt (lb)	10 Bulk loaded: Rd per wpn	11 Bulk loaded: Total wt (lb)	12 Total wt (lb)
	Inf bn, sep lt inf bde (TOE 7–175G)											
2	Burster, fld, incd		2.500		40					40	100	100
3	Dml set, explo, initiating, elec and semielec			3							768	768
4	Gren, hand and rifle, smoke, WP		2.625		144	144	378					378
5	Gren, hand, frag		2.125		812	812	1,726					1,726
6	Gren, hand, incd		2.940		136			136	400			400
7	Gren, hand, smoke, colored		1.360		144			144	196			196
8	Gren, hand, smoke, HC		2.560		240			240	614			614
9	GM sys, intcp, aerial, M41 (Redeye)	6	29.300			3	440	3	440			880
10	Lchr, gren, 40-mm, M79	30	0.750	86	2,580	18	1,161	6	387	6	387	1,935
11	Mg, 7.62-mm	3,080	0.930	20	61,600	880	1,637	1,320	2,455	880	1,637	5,729
12	Mine, apers, M14, nonmetallic		0.490		54					54	26	26
13	Mine, apers, M16-series		11.200		27					27	302	302
14	Mine, at, M21		22.700		81					81	1,839	1,839
15	Mort, 81-mm, on mount			13								
16	Fuze	26	3.840		338			14	699	12	599	1,298
17	Proj	120	17.320		1,560			80	18,013	40	9,006	27,019
18	Pistol, cal .45, auto	21	0.056	233	4,983	21	274					274
19	Rifle, 5.56-mm, auto	450	0.042	579	428,460	140	3,405	310	7,538			10,943
20	Rifle, rcl, 90-mm, M67	18	27.500	18	324			12	5,940	6	2,970	8,910
21	Rifle, rcl, 106-mm, on mount, M40A1	30	60.000	8	240			17	8,160	13	6,240	14,400
22	Rkt, HE, 66-mm, at (LAW), M72	6	7.800	18	108			2	281	4	562	843
23	Smokepot, HC		54.000		18					18	972	972
24	Total wt											79,552
25	STON											39.7

Table 5-29. Basic Load of Ammunition—Example for an Artillery Unit

1	1	2	3	4	5	6	7	8	9	10	11	12
1	Unit and type of munition	Rd per wpn	Packed wt per rd (lb)	Total wpn	Total rd	Carried on indiv		Carried on veh		Bulk loaded		Total wt (lb)
						Rd per wpn	Total wt (lb)	Rd per wpn	Total wt (lb)	Rd per wpn	Total wt (lb)	
	FA bn, 175-mm, SP (TOE 6-435G)											
2	Carr, CP, lt, tracked, M577			3								
3	Flare, sur, trip	12	1.940		36			12	70			70
4	Gren, hand, frag	20	2.125		60			20	128			128
5	Flare, sur, trip		1.940		55			30	58	25	49	107
6	Gren, hand, frag		2.125		550	550	1,169					1,169
7	Gren, hand, incd		2.940		398			398	1,170			1,170
8	Gren, hand, smoke, colored		1.360		160			160	218			218
9	Gren, hand, smoke, HC		2.560		240			240	615			615
10	GM sys, intcp, aerial, M41 (Redeye)	6	29.300			3	264	3	264			528
11	Gun, FA, SP, 175-mm, M107			12								
12	Chg, propelling, with primer	120	114.000		1,440			2	2,736	118	161,424	164,160
13	Flare, sur, trip	10	1.940		120			10	233			233
14	Fuze	145	3.313		1,740			2	80	143	5,685	5,765
15	Gren, hand, frag	8	2.125		96			8	204			204
16	Proj, 175-mm	114	158.000		1,368			2	3,792	112	212,352	216,144
17	Lchr, gren, 40-mm, M79	30	0.750	16	480	18	216	6	72	6	72	360
18	Mg, 7.62-mm	3,080	0.093	30	92,400	880	2,455	1,320	3,683	880	2,455	8,593
19	Mine, apers, M14, nonmetallic		0.490		37					37	18	18
20	Mine, apers, M16-series		11.200		18					18	202	202
21	Mine, apers, M18		6.800		10					10	68	68
22	Mine, at, M21		22.700		55					55	1,269	1,249
23	Pistol, cal .45, auto	21	0.056	41	861	21	48					48
24	Recov veh, FTRAC, lt, armed, M578			1								
25	Flare, sur, trip	16	1.940		16			16	31			31
26	Gren, hand, frag	8	2.125		8			8	17			17
27	Rifle, 7.62-mm, M14	160	0.083	510	81,600	100	4,233	60	2,540			6,773
28	Rkt, HE, 66-mm, at (LAW), M72	6	7.800	31	186			2	484	4	967	1,451
29	Smokepot, HC		54.000		18					18	972	972
30	Total wt											410,293
31	STON											205.1

Table 5-30. Class VII A (Air)—Weights and Cubes

1	1	2	3	4	5	6	7	8	9	10	11
			Operational dimensions			Reduced dimensions					
1	LIN	Item	Length	Width	Height	Length	Width	Height	Reduced cu ft	STON	Reduced MTON
			(Dimensions—ft)								
2	A30071	AIRPLANE OBSERVATION + 0-1A	25.00	36.17	7.92	25.00	8.17	7.42	1,514	0.62	37.85
3	A30132	AIRPLANE OBSERVATION + 0-1G	250.00	28.33	79.17	25.00	8.17	7.42	1,514	0.71	37.85
4	A30171	AIRPLANE OBSERVATION STOP + OV-1A	41.08	41.92	12.83	41.08	41.92	12.83	22,144	6.33	553.60
5	A30221	AIRPLANE OBSERVATION STOP + OV-1B	44.00	48.00	42.00	44.00	48.00	42.00	88,788	6.82	2,219.70
6	A30271	AIRPLANE OBSERVATION STOP + OV-1C	41.08	41.92	12.83	41.08	41.92	12.83	22,144	6.34	553.60
7	A30371	AIRPLANE OBSERVATION TRAINER + TO-1 D.	25.75	36.17	7.92	25.75	8.17	7.42	1,560	0.72	39.00
8	A30471	AIRPLANE RECONNAISSANCE UTILITY + RU-8DAPQ86.	33.58	50.17	11.50	33.58	50.17	11.50	19,458	3.30	486.45
9	A30521	AIRPLANE RECONNAISSANCE UTILITY + RU-8DAPS85.	31.83	50.17	11.50	31.83	50.17	11.50	18,444	3.27	461.10
10	A30596	AIRPLANE TRAINER + INSTRUMENT T-42A	28.58	37.75	9.58	28.58	37.75	9.58	10,374	2.25	259.35
11	A30621	AIRPLANE UTILITY + U-1A	42.00	58.17	12.67	42.00	58.17	12.67	31,041	3.10	776.02
12	A30721	AIRPLANE UTILITY + U-8D	31.83	45.33	11.42	31.83	46.17	11.42	16,778	3.27	419.45
13	A30821	AIRPLANE UTILITY + U-8F	33.33	45.92	14.17	33.33	45.92	14.17	21,683	3.46	542.07
14	A30831	AIRPLANE UTILITY + U-8G	31.83	45.42	11.33	31.83	45.42	11.33	16,461	3.24	411.52
15	A30871	AIRPLENE UTILITY + U-9B	35.83	49.00	14.50	35.83	49.00	14.50	25,460	3.49	636.50
16	A30921	AIRPLANE UTILITY + U-9C	35.83	49.00	14.50	35.83	49.00	14.50	25,460	3.50	636.50
17	A30946	AIRPLANE UTILITY + U-21A	35.83	45.83	14.58	35.83	45.83	14.58	24,031	3.87	600.77
18	A30971	AIRPLANE UTILITY STOP + U-10A	31.00	39.00	8.83	31.00	39.00	8.83	10,680	1.01	267.00
19	K30092	HEPICOPTER CARGO TRANSPORT + CH-21B	74.92	42.83	15.42	52.58	14.00	15.33	11,288	3.91	282.20
20	K30254	HEPICOPTER CARGO TRANSPORT + CH-34C	65.83	56.08	19.83	38.92	13.08	14.33	7,298	3.49	182.45
21	K30378	HEPICOPTER CARGO TRANSPORT + CH-47A	82.50	51.00	18.58	50.92	12.67	18.58	11,985	8.75	299.62
22	K30515	HEPICOPTER CARGO TRANSPORT + CH-54A	87.42	63.08	21.33	71.67	21.83	19.33	30,251	98.34	756.27
23	K30682	HEPICOPTER OBSERVATION + OH-13E	41.42	8.58	11.75	31.17	8.58	9.33	2,497	0.77	62.42
24	K30719	HEPICOPTER OBSERVATION + OH-13H	41.42	8.58	11.75	31.50	8.58	9.33	2,524	0.75	63.10
25	K30883	HEPICOPTER OBSERVATION + OH-23B	38.67	10.08	11.83	28.25	8.00	9.83	2,222	0.86	55.55
26	K30917	HEPICOPTER OBSERVATION + OH-23D	39.00	10.00	12.33	30.50	7.83	10.17	2,429	0.87	60.72
27	K31042	HEPICOPTER OBSERVATION + OH-58A	41.00	6.83	9.67	32.00	6.83	9.67	2,114	0.75	52.85
28	K31153	HEPICOPTER PRIMARY TRAINER + TH-55A	25.25	22.50	8.25	25.25	22.50	8.25	4,695	0.50	117.37
29	K31749	HEPICOPTER UTILITY + UH-1B	53.67	9.75	16.42	40.00	8.42	10.25	3,451	2.10	86.27
30	K31786	HEPICOPTER UTILITY + UH-1D	58.17	9.42	16.67	42.75	8.58	10.92	4,006	2.14	100.15
31	K31795	HEPICOPTER UTILITY + UH-1H	58.08	9.42	16.67	42.75	8.50	10.92	3,967	2.14	99.17
32	K31940	HEPICOPTER UTILITY + UH-19D	62.25	53.00	15.33	42.33	11.67	13.33	6,585	2.81	164.62

Table 5-31. Class VII B (Ground Support Materiel)—Weights and Cubes

1	1	2	3	4	5	6	7	8	9	10	11
			Operational dimensions			Reduced dimensions					
1	LIN	Item	Length	Width	Height	Length	Width	Height	Reduced cu ft	STON	Reduced MTON
			(Dimensions—ft)								
2	A92919	ARMORED CAB M2 TRACTOR+	6.67	5.50	3.08	6.67	5.50	3.08	113	1.80	2.82
3	A93056	ARMORED CAB M7 TRACTOR+	6.67	5.50	3.08	6.67	5.50	3.08	113	1.80	2.82
4	B12311	BACKHOE CRANE-SHOVEL+ 3/4 CU YD FOR CRANE-SHOVEL CRLR MTD 10 TON.	22.83	6.33	3.17	22.83	6.33	3.17	465	4.22	11.62
5	B12482	BACKHOE CRANE-SHOVEL+ 3/4 CU YD 12-1/2T CRLR MTD AND 20T TRK MTD.	20.00	4.25	4.00	20.00	4.25	4.00	340	4.05	8.50
6	B43025	BATCHING PLANT CEMENT+ GAS DRVN 1 COMP 84.6 TON BIN 50T PER HR.	20.33	5.58	8.00	20.33	5.58	8.00	908	5.05	22.70
7	C05064	BOOM EXTENSION MIDDLE CRANE+ CRWLR MTD 10 FT 40 TON.	10.00	3.92	3.42	10.00	3.92	3.42	137	0.60	3.42
8	C05612	BOOM JIB CRANE+ 15 FT 40 TON CRANE SHOVEL CRLR MTD.	18.00	4.25	1.83	18.00	4.25	1.83	144	0.98	3.60
9	C24935	BRIDGE FLOATING+ FOOT	27.67	12.75	7.17	27.67	12.75	7.17	2,532	9.65	63.30
10	C29490	BUCKET CLAMSHELL+ 3/4 CU YD	5.92	3.17	6.33	5.92	3.17	6.33	121	1.80	3.02
11	C29627	BUCKET CLAMSHELL+ 1-1/2 CU YD W/ TEETH.	9.00	7.00	4.08	9.00	7.00	4.08	264	3.25	6.60
12	C29764	BUCKET CLAMSHELL+ 2 CU YD	4.00	6.50	8.00	4.00	6.50	8.00	214	4.31	5.35
13	C29901	BUCKET CLAMSHELL+ 2 CU YD W/TEETH DREDGE TY.	9.92	8.00	4.50	9.92	8.00	4.50	364	6.07	9.10
14	C30586	BUCKET CONCRETE+ 2.CU YD	5.00	5.00	7.83	5.00	5.00	7.83	196	1.00	4.90
15	C31134	BUCKET DRAGLINE+ 2 CU YD	8.25	5.33	5.75	8.25	5.33	5.75	257	2.61	6.42
16	C43744	CAB ARMORED GRADER+ M-6	5.50	4.50	6.50	5.50	4.50	6.50	161	4.90	4.02
17	E69790	COMP RCP PWR DRVN+ AIR SKD GAS DRVN 55CFM 100PSI FOR DIV PUR.	9.33	2.58	4.42	9.33	2.58	4.42	111	0.90	2.77
18	E69927	COMP RCP PWR DRVN+ AIR SKD GAS DRVN 105 CFM 100 PSI.	9.67	3.75	4.08	9.67	3.75	4.08	148	1.47	3.70
19	E70338	COMP RCP PWR DRVN+ TRLR 2 WHL PNEU TIRES GAS 15 CFM 175 PSI.	8.83	5.08	4.92	8.83	5.08	4.92	224	0.65	5.60
20	E70475	COMP RCP PWR DRVN+ AIR TRLR GAS DRVN 55 CFM 80 PSI.	6.67	4.00	4.42	4.67	4.00	5.75	111	0.51	2.77
21	E70680	COMP RCP PWR DRVN+ AIR TRLR 4 PNEU WHL 315 CFM 100 PSI.	18.00	5.25	7.50	13.25	5.25	6.83	479	4.25	11.97
22	E70749	COMP RCP PWR DRVN+ AIR WHL AC 208-416V 60CY 3PH 15 CFM 3500 PSI.	11.75	5.58	4.33	7.75	5.58	4.33	189	1.03	4.72
23	E70886	COMP RCP PWR DRVN+ AIR WHL GAS DRVN 15 CFM 3500 PSI WTRZD.	11.92	5.67	3.42	7.75	5.67	3.42	155	1.10	3.87
24	E71160	COMP RCP PWR DRVN+ AIR WHL 4 WHL PNEU TIRES GAS 15CFM 3500 PSI.	11.92	5.67	6.17	7.92	5.67	6.17	280	1.07	7.00
25	E71297	COMP RCP PWR DRVN+ WHL 4 WHL PNEU TIRES 15 CFM 3500 PSI WNTRZD.	10.33	5.17	4.58	6.25	5.17	4.58	151	0.96	3.77

26	E71434	COMP RCP PWR DRVN + AIR TRK GAS DRVN WTRZD 80 CFM 5000 PSI.	23.25	7.92	9.50	23.25	7.92	8.58	1,594	9.65	39.85
27	E71571	COMP RCP PWR DRVN + AIR TRK GAS DRVN 210 CFM 100 PSI.	22.92	8.00	8.00	22.92	8.00	7.50	1,384	8.67	34.60
28	E72393	COMP RTY PWR DRVN + AIR SKD GAS DRVN 125 CFM 100 PSI:	7.92	4.33	4.08	7.92	3.67	3.92	115	1.27	2.87
29	E72667	COMP RTY PWR DRVN + AIR TRLR GAS DRVN 210 CFM 100 PSI.	17.58	8.00	6.58	17.58	8.00	6.58	932	4.32	23.30
30	E72804	COMP RTY PWR DRVN + AIR TRLR DSL DRVN 250 CFM 100 PSI.	18.58	7.92	6.75	18.58	7.92	6.25	933	3.91	23.32
31	E72941	COMP RTY RCP PWR DRVN + AC 220–440 V 3PH 60 CY.	10.25	4.92	3.83	6.08	4.92	3.83	115	0.81	2.87
32	E73352	COMP RTY PWR DRVN + AIR WHL MTD DSL DRVN 600 CFM 100 PSI.	18.75	7.08	7.75	13.50	6.42	7.17	629	5.33	15.72
33	E73489	COMP RTY PWR DRVN + AIR TRK GAS 210 CFM 100 PSI.	23.17	8.00	8.00	23.17	8.00	8.00	1,493	8.64	37.32
34	F35816	CRANE ATTACHMENT TRK MTD + HYD POW WINCH 5500 LB CAP FOR TRUCK.	16.17	6.00	2.75	16.17	6.00	2.75	267	1.85	6.67
35	F38693	CRANE TRACTOR TOWED + 20 TON 20 FT LIFT.	27.25	9.50	9.92	27.25	9.17	9.92	2,481	4.21	62.02
36	F39172	CRANE WHEEL MTD + 3 TON	17.75	9.00	8.75	17.75	9.00	8.75	1,398	10.50	34.95
37	F39241	CRANE WHEEL MTD + 5 TON 3/8 CU YD DSL 4×4 ROUGH TERRN AIR TRNSPT.	21.58	9.67	11.17	21.58	9.67	11.17	2,357	18.16	58.92
38	F39378	CRANE WHEEL MTD + 20 TON 3/4 CU YD ROUGH TERRAIN.	43.92	10.50	12.42	28.58	10.50	12.42	3,747	29.29	93.67
39	F43364	CRANE-SHOVEL CRWLR MTD + 12-1/2-TON 3/4 CU YD W/BC 30 FT BLK TKLE.	44.33	10.17	10.08	15.00	10.17	10.08	1,546	19.64	38.65
40	F56728	CURING MACHINE CONCRETE + GAS DRVN 20 FT W W/PUMP.	25.17	7.75	6.58	21.42	7.42	5.42	877	3.57	21.92
41	F88168	DEHYDRATOR SAND COMPRESSION + ELEC DBL SCREW WHL MTD 90 TON PER HR.	26.67	9.25	9.75	26.67	9.25	9.75	2,405	7.92	60.12
42	G27664	DISTRIBUTOR BITUMINOUS MATERIAL TANK TYPE + GAS DRVN TRK MTD 800G.	27.08	8.08	8.58	27.08	8.08	8.58	1,882	12.38	47.05
43	G27938	DISTRIB LIQ BITUMIN MATRL TNKLESS TY + GAS TRLR MTD 375 GPM.	11.67	8.25	5.83	11.67	8.25	5.83	570	2.48	14.25
44	G29945	DITCHING MACHINE + DSL DRVN WHL MTD LADDER.	27.25	8.00	12.42	29.58	8.00	10.50	2,485	18.05	62.12
45	G29976	DITCHING MACHINE + GAS DRVN CRLR MTD 8 FT 18–24 IN. W OF CUT DPTH.	24.50	11.00	11.52	24.50	11.00	11.25	3,032	15.00	75.80
46	G52994	DRIER AGGREGATE + DSL DRVN TRLR MTD 120 TON PER HR MAX CAP.	34.42	10.42	12.25	34.42	10.42	12.25	4,428	18.10	110.70
47	G53131	DRIER AGGREGATE + 70 HP AT 1400 RPM TRLR MTD 80 TO 120 TON PER HR.	34.42	10.42	12.25	34.42	10.42	12.25	4,426	18.10	110.65
48	G55186	DRIER-MIXER BITUM-CONCRETE MTRL WHL MTD + GAS DRVN 3 TON PER HR.	16.50	7.92	9.50	16.50	7.92	9.50	1,253	3.68	31.32
49	G85976	DUST COLLECT MACH PAVING MATERIAL + DSL DRVN SEMITRLR MTD 22000 CF.	34.00	11.92	12.50	34.00	9.92	10.92	3,694	9.38	92.35
50	H36465	FEEDER AGGREGATE + CHN DRVN 225 TON PER HR.	32.50	9.92	12.67	32.50	9.92	12.67	4,101	7.96	102.52

Table 5-31. Class VII B (Ground Support Materiel)—Weights and Cubes—Continued

1	2	3	4	5	6	7	8	9	10	11
1 LIN	Item	Operational dimensions			Reduced dimensions			Reduced cu ft	STON	Reduced MTON
		Length	Width	Height	Length	Width	Height			
		(Dimensions—ft)								
51 H55069	FINISHING MACHINE CONCRETE PAVING + LONGIT GAS 20 FT W W/SCRD ENG.	28.67	18.42	4.67	28.67	8.25	5.17	1,243	5.90	31.07
52 H55206	FINISHING MACHINE CONCRETE PAVING + GAS DRVN 20-25 FT M/VIBRATOR.	26.50	10.50	6.08	21.50	10.50	5.42	1,230	7.48	30.75
53 H56391	FIRE FIGHT EQUIP SET + TRK MTD ARMY AIRCRAFT CRASH OS CL 530B.	22.58	7.83	8.83	22.58	7.83	8.25	1,482	7.96	37.05
54 H56528	FIRE FIGHT EQUIP SET + TRK MTD BRUSH OS CL 530B.	23.58	7.83	9.00	23.58	7.83	7.08	1,309	9.22	32.72
55 H56665	FIRE FIGHT EQUIP SET + TRK MTD GUIDED MISSILE.	28.00	8.00	12.08	28.00	8.00	10.42	2,333	13.34	58.32
56 H56802	FIRE FIGHT EQUIP SET + TRK MTD STRUCT TY OS CL 530B.	23.58	7.83	9.00	23.58	7.83	7.08	1,316	9.41	32.90
57 H77488	FLOAT BRDGE CONCRETE FINISH + 13 TO 21 FT WHLBS 20-25 FT W SPAN.	27.92	4.17	2.67	27.92	4.17	2.67	319	0.82	7.97
58 J35414	GEN ST + DSL ENG TM + 45 KW 400 CY 3 PH AC 120/208 240/416 V PU-401/M.	13.83	8.00	7.08	13.83	8.00	7.08	786	3.78	19.65
59 J35424	GEN ST DSL ENG TM + 15KW 60CY 3PH AC 120/208 240/416V PU-402/M.	13.83	7.75	6.83	13.83	7.75	6.83	739	2.56	18.47
60 J35561	GEN ST DSL ENG TM + 45KW 60CY 3PH AC 120/208 240/416V PU-407/M.	14.25	8.00	7.17	14.25	8.00	7.17	825	3.66	20.62
61 J35698	GEN ST DSL ENG TRK MTD + 45KW 60CY 3PH AC 120/208 240/416V PU-408M.	26.00	8.08	11.33	26.00	8.08	9.75	2,061	13.21	51.52
62 J35801	GEN ST DSL ENG TM + 100KW 60CY 3PH AC 120/208 240/416V PU-495/G.	15.58	8.08	6.67	15.58	8.08	6.67	847	4.67	21.17
63 J36109	GEN ST DSL ENG + 30KW 60CY 3PH AC 120/208 240/416V 50CY SKID.	9.25	2.92	5.75	9.25	2.92	5.58	154	2.51	3.85
64 J36383	GEN ST DSL ENG TM + 30KW 60CY 3PH AC 120/208 240/416V PU-406.	13.83	7.75	6.92	13.83	7.75	6.92	744	3.27	18.60
65 J37205	GEN ST DSL ENG TM + 45KW 60CY 3PH AC 120/208 240/416V PU-551/M	15.67	7.92	7.00	14.17	7.92	7.00	792	3.68	19.80
66 J37890	GEN ST DSL ENG + 60KW AC 120/208 240/416V 3PH 60CY SKID MTD.	8.67	3.00	5.58	8.67	3.00	4.67	121	2.19	3.02
67 J38712	GEN ST DSL ENG + 100KW 60CY 3PH AC 120/208 240/416V 50CY SKID	11.67	4.92	7.25	11.67	4.92	6.83	396	4.79	9.90
68 J39534	GEN ST DSL ENG + 150KW 60CY 3PH 4 WIRE AC 240/416V 1800 RPM BASE.	9.00	3.67	5.67	9.00	3.67	5.67	187	4.57	4.67
69 J40767	GENERATOR SET GASOLINE ENGINE TRAILER MTD + PU-236/G.	13.83	6.92	8.17	13.83	6.92	8.17	781	1.94	19.52
70 J40904	GENERATOR SET GASOLINE ENGINE TRAILER MTD + PU-248U.	13.75	6.92	8.25	13.75	6.92	6.67	639	1.89	15.97

71	J41041	GENERATOR SET GASOLINE ENGINE TRAILER MTD + PU-253/U.	13.92	6.83	8.17	13.92	6.83	7.42	715	2.75	17.87
72	J41075	GENERATOR SET GASOLINE ENGINE TRAILER MTD + PU-256.	12.00	7.42	7.50	12.00	7.42	7.50	668	2.02	16.70
73	J41109	GENERATOR SET GASOLINE ENGINE TRAILER MTD + PU-269.	13.75	6.83	8.17	13.75	6.83	6.75	647	2.52	16.17
74	J41178	GENERATOR SET GASOLINE ENGINE TRAILER MTD + PU-290/MR.	13.75	6.83	8.17	13.75	6.83	6.17	587	2.25	14.67
75	J41315	GENERATOR SET GASOLINE ENGINE TRAILER MTD + PU-294/G.	13.75	6.83	8.17	13.75	6.83	6.00	569	2.35	14.22
76	J41452	GENERATOR SET GASOLINE ENGINE TRAILER MTD + PU-304 MPQ-4A.	13.83	6.92	8.17	13.83	6.92	6.58	630	2.25	15.75
77	J41589	GENERATOR SET GASOLINE ENGINE TRAILER MTD + PU-322/G.	12.25	6.08	6.92	12.25	6.08	4.17	313	1.17	7.82
78	J41657	GENERATOR SET GASOLINE ENGINE TRAILER MTD + PU-269.	13.75	6.83	8.17	13.75	6.83	6.08	584	2.09	14.60
79	J41786	GENERATOR SET GASOLINE ENGINE TRAILER MTD + PU-332/U.	12.17	6.08	6.67	12.17	6.08	5.50	411	1.22	10.27
80	J41819	GENERATOR SET GASOLINE ENGINE TRAILER MTD + PU-375A/G.	12.25	6.08	6.92	12.25	6.08	5.67	428	1.39	10.70
81	J41863	GENERATOR SET GASOLINE ENGINE TRAILER MTD + PU-378/G.	13.83	6.92	8.17	13.83	6.92	6.17	590	2.82	14.75
82	J41897	GENERATOR SET GASOLINE ENGINE TRAILER MTD + PU-409/M.	12.25	6.08	6.92	12.25	6.08	5.50	413	1.05	10.32
83	J41931	GENERATOR SET GASOLINE TRAILER MTD + PU-456/G.	12.25	6.08	6.92	12.25	6.08	5.50	413	1.44	10.32
84	J42000	GENERATOR SET GASOLINE ENGINE TRAILER MTD + PU-474/U.	13.83	6.92	8.17	13.83	6.92	6.67	638	2.93	15.95
85	J42100	GEN ST GAS ENG TM + 10KW 60CY 1PH AC 120/240V PU-619/M.	14.50	6.92	8.00	14.50	6.92	5.42	549	2.31	13.72
86	J46384	GEN ST GAS ENG TM + 3KW 60CY 1-3PH AC 120/240 120/208V PU-617/M.	12.25	6.08	6.92	12.25	6.08	4.83	368	1.07	9.20
87	J47206	GEN ST GAS ENG TM + 5KW 60CY 1-3PH AC 120/240 120/208V PU-236B/G.	13.83	6.92	8.17	13.83	6.92	6.83	658	1.70	16.45
88	J47343	GEN ST GAS ENG TM + 5KW 60CY 1-3PH AC 120/240 120/208V PU-409A/M.	12.25	6.08	6.92	12.25	6.08	5.33	400	0.91	10.00
89	J47480	GEN ST GAS ENG TM + 5KW 60CY 1-3PH AC 120/240 120/208V PU-618/M.	14.50	6.92	8.00	14.50	6.92	5.42	549	1.98	13.72
90	J47617	GEN ST GAS ENG TM + 5KW 60CY 1-3PH AC 120/240 120/208V PU-620M.	12.25	6.08	6.92	12.25	6.08	5.83	441	1.31	11.02
91	J49809	GEN SE GAS ENG TM + 10KW 60CY 1-3PH AC 120/240 120/208V PU-332A/G.	12.17	6.08	6.67	12.17	6.08	5.50	411	1.17	10.27
92	J49946	GEN SE GAS ENG TM + 10KW 60CY 1-3PH AC 120/240 120/208V PU-564A/G.	13.83	6.92	8.17	13.83	6.92	5.50	526	1.92	13.15
93	J50494	GEN ST GAS ENG + 18.9KW DC 86V WHL MTD WNTRZD.	10.42	6.08	5.75	10.42	6.08	5.75	368	0.78	9.20
94	J51418	GEN ST GAS ENG TM + 45KW 400CY 3PH AC 120/208 240/416V PU-614/M.	13.42	7.75	6.08	13.42	7.75	6.08	640	3.30	16.00
95	J74215	GRAD CONT UNIT AGGREG + LINE SHFT GEAR DRVN TRLR MTD 8X4 FT SCRN.	33.50	10.17	12.92	28.42	10.17	12.92	3,751	14.69	93.77

Table 5-31. Class VII B (Ground Support Materiel)—Weights and Cubes—Continued

1	1	2	3	4	5	6	7	8	9	10	11
			Operational dimensions			Reduced dimensions			Reduced cu ft	STON	Reduced MTON
1	LIN	Item	Len th	Width	Height	Length	Width	Height			
			(Dimensions—ft)								
96	J74715	GRADER ROAD MOTORIZED+ DSL. DRVN AIR TRANSPTBL 6×4.	22.67	7.25	9.08	22.67	7.25	6.50	1,075	8.15	26.87
97	J74783	GRADER ROAD MOTORIZED+ DSL DRUM HVY 4×4 ALL-WHL STEER.	23.92	7.83	8.50	23.92	7.83	8.50	1,615	11.04	40.37
98	J74852	GRADER ROAD MOTORIZED+ DSL DRVN HVY 6×4 FRONT-WHL STEER.	25.58	7.67	9.92	25.58	7.67	7.75	1,535	13.49	38.37
99	J74886	GRADER ROAD MOTORIZED+ DSL DRVN SECTIONALIZED.	25.00	7.75	7.50	25.00	7.75	7.50	1,453	12.60	36.32
100	J74920	GRADER ROAD MOTORIZED+ DSL DRVN 10000LB 12FT BLADE W/LEAN FRT WHL.	25.67	7.58	9.00	25.67	7.58	7.42	1,458	10.47	36.45
101	K24520	HEATER BITUMEN+ GAS DRVN TRLR MTD 3 CAR HEATING.	15.67	6.00	6.67	15.67	6.00	6.67	630	3.06	15.75
102	K25205	HEATER HOT OIL SEMITRLR+ DSL DRVN GENERATOR 2100000 BTU OUTPUT.	26.83	8.17	10.75	26.83	8.17	9.58	2,107	8.12	52.67
103	K25215	HEATER HOT OIL TRLR MOUNTED+ ELECTRIC POWERED 2100000 BTU OUTPUT.	13.75	7.08	8.92	13.75	7.08	8.92	880	3.95	22.00
104	L16026	JETTING SET PORTABLE+ PILE DRIV OPER (ARMY).	7.75	3.08	5.67	7.75	3.08	4.92	120	1.02	3.00
105	L21437	KETTLE HEATING BITUMEN+ GAS DRVN TRLR MTD 165 GAL.	12.00	5.58	5.58	12.00	5.58	4.67	314	0.91	7.85
106	L43390	LAUNCH M48 TANK CHASS TRNSPTG+ 40 AND 60 FT BRIDGE TY CL 60.	27.08	12.08	9.92	27.08	12.08	9.92	3,250	55.00	81.25
107	L43527	LAUNCH M48A2 TANK CHASS TRNPTG+ 40 AND 60FT BRIDGE TY/CL60.	26.75	12.00	10.00	26.75	12.00	10.00	3,236	49.50	80.90
108	L43664	LAUNCH M60 SERIES TANK CHASS TRNSPTG+ 40 AND 60 FT BRDGE TY CL60.	28.42	12.00	10.00	28.42	12.00	10.00	3,443	41.50	86.07
109	L48815	LEAD SECTION LOWER PILE DRIVER+ 10 FT LG.	10.75	3.67	2.83	10.75	3.67	2.83	115	0.46	2.87
110	L48952	LEAD SECTION LOWER PILE DRIVER+ 15 FT LG.	15.75	3.17	2.33	15.75	3.17	2.33	119	0.60	2.97
111	L49089	LEAD SECTION TOP PILE DRIVER+ 15 FT LG.	15.75	3.17	2.33	15.75	3.17	2.33	119	0.60	2.97
112	L49226	LEAD SECTION TOP PILE DRIVER+ 20 FT LG	20.00	3.17	2.33	20.00	3.17	2.33	152	0.63	3.80
113	L75803	LOADER BUCKET TYPE+ DSL DRVN 3 CU YD PER MIN.	19.50	9.75	18.50	19.50	9.75	18.50	3,517	10.25	87.92
114	L75940	LOADER BUCKET TYPE+ GAS DRVN 3 CU YD PER MIN.	19.50	9.75	18.50	19.50	9.75	18.50	3,517	10.25	87.92
115	L76282	LOADER SCOOP TYPE+ DSL DRVN 4 WHL W/O BUCKET W/FRKLFT 10500 LB.	21.25	9.33	9.58	21.25	9.33	9.58	1,901	17.92	47.52
116	L76351	LOADER SCOOP TYPE+ DSL DRVN 4 WHLS 1-1/2 CU YD.	19.50	8.08	9.92	19.50	8.08	7.75	1,232	8.93	30.80

117	L76488	LOADER SCOOP TYPE+ DSL DRVN 4 WHLS 2-1/2 CU YD.	20.67	8.50	8.17	20.67	8.50	8.17	1,438	13.59	35.95
118	L76556	LOADER SCOOP TYPE+ DSL 2-1/2 CU YD HINGE FRME W/MULTI PURP BUCKET.	23.50	8.42	8.33	23.50	8.42	8.25	1,638	12.41	40.95
119	L76625	LOADER SCOOP TYPE+ DSL 4 WHLS 2-1/2 CU YD W/MULTI SEGMENT BUCKET.	21.75	8.92	9.25	21.50	8.92	8.25	1,589	14.99	39.72
120	L76693	LOADER SCOOP TYPE+ SEC 2-1/2 CU YD.....	10.92	5.75	6.25	10.92	5.75	6.25	392	3.00	9.80
121	M53877	MIXER BITUMINOUS MATERIAL NONSELF LOADING+ DSL TRLR MTD.	20.92	9.92	11.67	20.92	9.92	11.67	2,438	15.70	60.95
122	M54151	MIXER CONCRETE TRAILER MOUNTED+ GAS DRVN 16 CU FT.	12.83	8.08	10.67	8.75	7.75	10.67	732	3.11	18.30
123	M54562	MIXER CONCRETE TRAILER MOUNTED+ GAS ENG 16 CU FT.	13.67	7.83	10.25	8.50	7.83	10.25	688	3.45	17.20
124	M55384	MIXER ROTARY TILLER+ DSL DRVN SELF PROPEL.	24.42	8.00	8.17	24.42	8.00	8.17	1,595	7.93	39.87
125	N53732	PANEL ASSY+ THREAD DECK STL 17 FT 11/16 IN. LG.	17.58	5.58	2.00	17.58	5.58	2.00	197	2.08	4.92
126	N61678	PANEL RAMP THREAD+ STL 16 FT 1 IN. LG.. 11/16 IN LG.	16.08	5.58	1.92	16.08	5.58	1.92	172	1.88	4.30
127	N74624	PAVER CONCRETE+ GAS DRVN CRLR MTD DUAL DRUM 34 CU FT.	70.75	12.50	14.58	70.75	10.08	11.58	8,337	31.25	208.42
128	N75124	PAVING MACHINE BITUMINOUS MATERIAL + GAS DRVN CRWLR MTD 12 FT RN.	15.17	10.42	7.67	15.17	10.42	6.33	1,011	11.88	25.27
129	N91371	PILE DRIVING RIG+ SKID MTD 65 FT LG....	20.00	8.00	8.00	20.00	8.00	8.00	1,280	11.30	32.00
130	P18052	PONTON BOAT+ HALF SECT ALUM HULL 18 FT 4-1/2 IN. LG.	18.58	7.08	2.83	18.58	7.08	2.83	380	0.31	9.50
131	P18189	PONTON BOAT+ ALUM HALF SECT ALUM HULL 18 FT 5 IN. LG.	18.75	7.25	2.92	18.75	7.25	2.92	397	0.33	9.92
132	P18326	PONTON BOAT+ HALF SECT ALUM 29 FT 7-5/8 IN. LG 6 FT 11 IN. W.	30.00	7.00	4.50	30.00	7.00	4.50	954	0.96	23.85
133	P92989	PUMP CENTRF+ GAS DRVN SKID MTD 4 IN. 200 GPM 300 FT HD.	8.00	3.00	5.75	8.00	3.00	4.25	103	1.25	2.57
134	P93263	PUMP CENTRF+ GAS DRVN SKID 6 IN. 245 GPM 205 FT HD 1120 GPM 100 FT HD.	9.75	3.08	5.83	9.75	3.08	5.08	159	1.38	3.97
135	P93400	PUMP CENTRF+ GAS SKD 6 IN. 500 GPM 555 FT HD 1400 GPM 275 FT HD.	12.75	5.42	7.08	12.75	3.17	6.00	246	3.50	6.15
136	P94222	PUMP CENTRF+ GAS DRVN WHL 2 WHL PNEU TIRES 4 IN. 500 GPM 30 FT HD.	8.25	4.67	5.75	8.25	4.67	5.75	224	9.69	5.60
137	P94359	PUMP CENTRF+ GAS DRVN WHL MTD 60 FT HD 1500 GPM 6 IN.	16.00	6.92	10.00	10.25	6.92	9.33	673	3.14	16.82
138	P97051	PUMPING ASSY FLAMBL LIQ GAS WHL+ 4 IN. OUT 350 GPM 275 FT HD.	6.75	4.42	4.25	6.75	4.42	4.25	128	0.91	3.20
139	S10682	ROLLER AIR MOBILITY+ VIBRATING.....	8.00	5.50	5.58	8.00	5.50	5.58	249	2.45	6.22
140	S11068	ROLLER MOTORIZED+ GAS DRIVEN TANDEM 2 ROLLS 5 TO 8 TON.	14.75	5.25	7.08	14.75	5.25	5.42	426	6.50	10.65
141	S11205	ROLLER MOTORIZED+ GAS DRIVEN TANDEM 3 ROLLS 9 TO 14 TON.	20.67	5.50	7.67	20.67	5.50	5.83	675	10.75	16.90
142	S11273	ROLLER MOTORIZED+ GAS DRIVEN TANDEM 3 ROLLS 13 TO 18 TON.	22.92	6.42	8.50	22.92	6.42	8.50	1,258	13.70	31.45

Table 5-31. Class VII B (Ground Support Materiel)—Weights and Cubes—Continued

1	1 LIN	2 Item	3 Operational dimensions Length	4 Operational dimensions Width	5 Operational dimensions Height	6 Reduced dimensions Length	7 Reduced dimensions Width	8 Reduced dimensions Height	9 Reduced cu ft	10 STON	11 Reduced MTON
			(Dimensions—ft)								
143	S11342	ROLLER MOTORIZED+ GAS DRVN 3 WHL 3 RO HVY.	17.25	6.33	6.50	17.25	6.33	6.50	710	10.60	17.75
144	S11479	ROLLER MOTORIZED+ GAS DRVN 10 TON 3 WHL W/SCARIF AND SPRINK.	19.08	6.33	6.75	19.08	6.33	6.75	822	10.99	20.55
145	S11616	ROLLER MOTORIZED+ GAS 3 WHL 10 TON W/SPRINK.	18.67	6.33	6.67	18.67	6.33	6.67	798	10.67	19.95
146	S11684	ROLLER MOTORIZED PNEU TIRED+ AIR MOBILE 9 WHEEL.	13.33	6.00	7.58	13.33	6.00	6.00	482	3.95	12.05
147	S12164	ROLLER TOWED PNEUMATIC TIRED+ 13 TIRE 9 TON.	14.33	7.33	3.83	1.017	7.33	3.83	289	2.05	7.22
148	S12301	ROLLER TOWED PNEUMATIC TIRED+ 4 TIRE 7-1/2 TON BALLAST TO 35 TON.	19.50	7.83	7.33	19.50	7.83	7.33	1,126	6.80	28.15
149	S12438	ROLLER TOWED PNEUMATIC TIRED+ 4 TIRE 7-1/2 TON BALLAST TO 50 TON.	24.50	7.92	7.67	24.50	7.92	7.67	1,497	7.35	37.42
150	S12575	ROLLER TOWED SHEEPSFOOT+ 2 DR	12.67	9.83	4.42	12.67	9.83	4.42	555	3.75	13.87
151	S14897	ROOTER ROAD+ CBL OPRTD 24 IN. DEPTH	17.08	8.25	6.92	17.08	8.25	6.92	975	3.46	24.37
152	S15034	ROOTER ROAD+ CBL OPRTD 30 IN. DEPTH	20.33	8.33	7.75	20.33	8.33	7.75	1,329	6.52	33.22
153	S56256	SCRAPER EARTH MOVING TOWED+ HYD 18 CU YD SCOOP.	31.00	10.42	10.25	31.00	10.42	10.25	3,328	16.75	83.20
154	S56393	SCRAPER EARTH MOVING TOWED+ 12 CU YD.	33.00	11.08	9.83	28.00	11.08	9.83	3,069	12.07	76.72
155	S56804	SCRAPER EARTH MOVING TOWED+ 18 CU YD SCOOP.	40.58	10.33	10.42	35.00	10.33	10.42	3,782	19.70	94.55
156	S56941	SCRAPER EARTH MOVING TOWED+ 7-1/2 CU YD SCOOP.	27.83	8.25	6.75	27.83	8.25	6.75	1,570	6.33	39.25
157	S57078	SCRAPER EARTH MOVING TOWED+ 8 CU YD.	29.58	9.83	10.00	29.58	9.83	10.00	2,909	7.80	72.72
158	T40497	SHOVEL FRONT CRANE-SHOVEL+ CRLR MTD 3/4 CU YD 10 TON.	24.75	4.08	6.17	24.75	4.08	6.17	629	3.94	15.72
159	T40634	SHOVEL FRONT CRANE-SHOVEL+ TRK MTD 3/4 CU YD 20 TON.	21.33	3.25	5.75	21.33	3.25	5.75	405	3.77	10.12
160	T40771	SHOVEL FRONT CRANE SHOVEL+ CRLR MTD 2 CU YD 40 TON.	28.83	5.25	8.75	28.83	5.25	8.75	1,331	10.63	33.27
161	U12063	SPREADER AGGREGATE+ TOWED 8 FT SPR	13.00	6.17	5.83	8.25	6.17	5.83	300	1.31	7.50
162	U12200	SPREADER CONCRETE+ GAS DRVN 25 FT SPR.	29.33	10.08	6.92	27.67	8.17	6.58	1,503	9.46	37.57
163	U55846	SUBGRADER FORM RIDING+ GAS DRVN 20 TO 25 FT.	33.42	10.00	6.92	32.00	8.58	6.50	1,793	8.50	44.82
164	W76268	TRACTOR FULL TRCKD LOW SPD+ MED DSP SECTNLZED AIR TRANSPTBL W/ATT.	18.33	11.25	10.00	18.33	11.25	10.00	2,063	22.50	51.57

165	W76302	TRACTOR AIR MOBILE+ W/BACKHOE AND FRONT LOADER 1/2 CU YD.	16.67	8.75	7.00	16.67	8.75	7.00	1,021	12.00	25.52
166	W76336	TRACTOR AIR MOBILE+ W/BLADE	11.83	7.33	6.83	11.83	7.33	5.42	474	4.95	11.85
167	W76816	TRACTOR FULL TRCKD LOW SPD+ DSL MED DBP W/BULDOZ W/SCARIF WINCH.	19.08	11.25	10.08	16.75	10.08	7.75	1,324	22.07	33.10
168	W77090	TRACTOR FULL TRCKD LOW SPD+ DSL HVY DBP.	15.75	8.75	7.50	15.75	8.75	7.50	1,034	17.40	25.85
169	W77364	TRACTOR FULL TRCKD LOW SPD+ DSL HVY DBP W/BULDOZ SCARIF.	20.00	11.50	8.83	17.50	9.75	7.92	1,364	23.56	34.10
170	W77501	TRACTOR FULL TRCKD LOW SPD+ DSL HVY DBP W/BULDOZ SCARIF RIPPER.	19.00	11.33	10.42	19.00	11.33	10.42	2,243	24.04	56.07
171	W77638	TRACTOR FULL TRCKD LOW SPD+ DSL HVY DBP W/BULDOZ SCARIF WINCH.	20.75	11.50	8.83	18.25	9.75	7.92	1,423	24.13	35.57
172	W77775	TRACTOR FULL TRCKD LOW SPD+ DSL HVY DBP PCU CBL FRT 1 DR.	16.42	9.33	9.17	16.42	9.33	7.17	1,115	23.42	27.87
173	W78186	TRACTOR FULL TRCKD LOW SPD+ DSL HVY DBP PCU CBL REAR 2 DR.	15.92	8.75	9.17	15.92	8.75	7.58	1,056	20.91	26.40
174	W78323	TRACTOR FULL TRCKD LOW SPD+ DSL HVY DBP PCU WINCH.	17.08	9.17	8.00	17.08	9.17	8.00	1,253	23.37	31.32
175	W78871	TRACTOR FULL TRCKD LOW SPD+ DSL HVY DBP W/ANGDOZ PCU CBL REAR 2D.	19.42	13.58	8.83	16.25	9.25	7.42	1,115	20.91	27.87
176	W79556	TRACTOR FULL TRCKD LOW SPEED+ DSL HVY DBP W/BULDOZ.	19.00	11.25	9.17	16.50	9.67	7.75	1,243	20.55	31.07
177	W79693	TRACTOR FULL TRCKD LOW SPD+ DSL HVY DBP W/BULDOZ.	21.00	12.08	9.08	17.67	9.25	7.58	1,256	24.81	31.40
178	W80104	TRACTOR FULL TRCKD LOW SPD+ DSL LGHT DBP BULDOZ W/SCARIF WNCH.	14.17	7.75	7.42	11.33	6.83	5.75	450	7.14	11.25
179	W80378	TRACTOR FULL TRCKD LOW SPD+ DSL LGHT DBP W/BULDOZ SCARIF TETH PC.	15.50	7.92	8.67	15.50	7.92	6.50	811	10.92	20.27
180	W80515	TRACTOR FULL TRCKD LOW SPD+ DSL LIGHT DBP W/BULDZ SCARIF PCU HYD.	14.50	8.08	7.67	14.50	8.08	6.33	748	8.08	18.70
181	W80652	LOADER SCOOP TYPE FULL TRACKED+ 1 CU YD MULTIPURP BUCKET.	12.42	6.75	6.58	11.58	6.17	6.17	444	8.13	11.10
182	W80789	TRACTOR FULL TRCKD LOW SPD+ DSL MED W/ANGLEDOZ SCARIF.	17.75	12.67	9.33	14.17	9.00	7.50	969	18.53	24.22
183	W80926	TRACTOR FULL TRCKD LOW SPD+ DSL MED DBP.	14.50	6.17	7.92	14.50	6.17	7.92	709	17.93	17.72
184	W81063	TRACTOR FULL TRCKD LOW SPD+ DSL MED DBP.	17.17	12.58	8.58	14.67	8.75	5.92	771	14.50	19.27
185	W81337	TRACTOR FULL TRCKD LOW SPD+ DSL MED DBP PCU CBL 1 DR PCU CBL.	15.58	8.17	8.50	15.58	8.17	7.08	909	18.52	22.72
186	W82570	TRACTOR FULL TRCKD LOW SPD+ DSL MED DBP W/ANGDOZ PCU HYD.	17.83	12.67	7.92	14.92	8.92	7.92	1,054	20.07	26.35
187	W82707	TRACTOR FULL TRCKD LOW SPD+ DSL MED DBP W/ANGDOZ SCARIF CRNE.	14.00	6.92	5.08	14.00	6.92	5.08	492	18.40	12.30
188	W83255	TRACTOR FULL TRCKD LOW SPD+ DSL MED DBP W/ANGLEDOZ SCARIF WINCH.	18.00	12.58	8.92	14.92	8.83	7.92	1,048	18.36	25.20
189	W83392	TRACTOR FULL TRCKD LOW SPD+ DSL MED DBP W/BULDOZ PCU 2 DR.	18.67	10.42	8.50	15.50	8.92	7.67	1,063	16.65	26.57

Table 5-31. Class VII B (Ground Support Materiel)—Weights and Cubes—Continued

1	1 LIN	2 Item	3 Operational dimensions Length (Dimensions—ft)	4 Operational dimensions Width (Dimensions—ft)	5 Operational dimensions Height (Dimensions—ft)	6 Reduced dimensions Length (Dimensions—ft)	7 Reduced dimensions Width (Dimensions—ft)	8 Reduced dimensions Height (Dimensions—ft)	9 Reduced cu ft	10 STON	11 Reduced MTON
190	W83529	TRACTOR FULL TRCKD LOW SPD+ DSL MED DBP W/BULDOZ W/SCARIF RIPPER.	23.75	11.08	10.25	21.00	9.50	7.83	1,573	21.99	39.32
191	W83666	TRACTOR FULL TRCKD LOW SPD+ DSL MED DBP W/ANGDOZ.	17.17	12.58	8.58	14.67	8.75	5.92	768	14.50	19.20
192	W83940	TRACTOR FULL TRCKD LOW SPD+ DSL MED DBP W/ANGDOZ PCU FRT 1 DR.	18.00	12.58	8.58	15.50	8.75	5.92	814	14.59	20.35
193	W84214	TRACTOR FULL TRCKD LOW SPD+ DSL MED DBP W/ANGDOZ WINCH.	18.08	12.58	8.50	16.75	9.00	7.17	1,086	15.68	27.15
194	W84351	TRACTOR FULL TRCKD LOW SPD+ DSL MED DBP W/BULDOZ.	17.67	10.42	8.17	15.00	8.67	6.75	885	15.25	22.12
195	W84488	TRACTOR FULL TRCKD LOW SPD+ DSL MED DBP W/BULDOZ.	19.33	12.08	8.58	17.17	9.33	7.50	1,205	20.71	30.12
196	W84625	TRACTOR FULL TRCKD LOW SPD+ DSL MED DBP W/BULDOZ CBL PCU.	17.25	10.42	7.00	17.25	10.42	7.00	1,261	17.83	31.52
197	W86269	TRACTOR FULL TRCKD LOW SPD+ DSL DRVN 8600 TO 12000 DBP.	10.00	6.67	5.58	10.00	6.67	5.58	375	5.48	9.37
198	W89009	TRACTOR WHEELED WAREHOUSE+ ELEC SRT 2000 LB.	7.25	3.42	5.08	7.25	3.42	5.08	127	1.61	3.17
199	W89146	TRACTOR WHEELED WAREHOUSE+ ELEC 2000 LB.	7.25	3.42	5.33	7.25	3.42	5.33	133	1.48	3.32
200	W89283	TRACTOR WHEELED WAREHOUSE+ ELEC SRT 4000 LB.	7.17	3.50	4.92	7.17	3.50	4.92	123	2.70	3.07
201	W89420	TRACTOR WHEELED WAREHOUSE+ ELEC 4000 LB.	7.17	3.50	5.00	6.25	3.50	5.00	112	2.53	2.80
202	W89557	TRACTOR WHEELED WAREHOUSE+ GAS 4000 LB.	10.08	5.50	4.75	10.08	5.50	4.75	268	3.40	6.70
203	W89594	TRACTOR WHEELED WAREHOUSE+ GAS PT 7500 LB.	9.50	5.75	4.67	9.50	5.75	4.67	257	4.98	6.42
204	X44393	TRUCK DUMP+15 TON DSL DRVN	24.08	10.50	11.17	24.08	10.50	11.17	2,846	16.60	71.15
205	X44804	TRUCK FIRE FIGHT+ PUMP FOAM AND WATER 500 GPM.	22.58	7.58	9.00	22.58	7.58	7.17	1,230	9.90	30.75
206	X44941	TRUCK FIRE FIGHT+ PUMP FOAM AND WTR 500 GPM MULTI FUEL ENG DRVN.	22.67	7.75	8.92	22.67	7.58	8.17	1,422	7.75	35.55
207	X45078	TRUCK FIRE FIGHT+ PUMP FOAM AND WATER 1500 GPM.	28.00	8.00	12.08	28.00	8.00	10.42	2,333	12.78	58.32
208	X48914	TRUCK LIFT FORK+ DSL DRVN 6000 LB CAP ROUGH TERRAIN.	19.50	8.58	10.42	15.58	8.58	8.75	1,179	11.50	29.47
209	X49051	TRUCK LIFT FORK+ DSK DRVN 10000 LB CAP ROUGH TERRAIN.	23.67	8.83	11.08	18.67	8.83	8.50	1,423	17.71	35.57
210	X49188	TRUCK LIFT FORK+ ELEC 2000 LB	9.25	3.00	6.50	7.08	3.00	6.50	142	2.75	3.55
211	X49736	TRUCK LIFT FORK+ ELEC 3000 LB	6.58	4.92	7.83	5.33	4.92	7.83	209	2.39	5.22

212	X50010	TRUCK LIFT FORK + ELEC SRT 4000 LB CAP 100 IN. LH.	10.50	3.67	7.67	7.00	3.67	7.67	200	4.37	5.00
213	X50284	TRUCK LIFT FORK + ELEC 4000 LB 100 IN. LH.	9.25	3.33	5.67	6.25	3.33	5.67	122	4.22	3.05
214	X50695	TRUCK LIFT FORK + ELEC SRT 6000 LB 113 F IN. LP 168 LH.	6.67	3.58	9.42	7.67	3.58	9.42	260	5.48	6.50
215	X50832	TRUCK LIFT FORK + ELEC 6000 LB 127 IN. LH	10.58	3.50	6.83	7.17	3.50	6.83	176	5.30	4.40
216	X50969	TRUCK LIFT FORK + ELEC SPK PRF SRT 6000 LB 168 LH.	10.83	3.67	8.92	7.42	3.67	8.92	246	4.97	6.15
217	X51106	TRUCK LIFT FORK + GAS SRT 2000 LB 127 IN. LH.	8.92	3.00	6.92	6.17	3.00	6.92	129	2.30	3.22
218	X51243	TRUCK LIFT FORK + GAS SRT 2000 LB 100 IN. LH.	8.92	2.67	6.92	5.83	2.67	6.92	108	2.24	2.70
219	X51380	TRUCK LIFT FORK + GAS PT 4000 LB 144 IN. LH.	11.50	5.00	7.50	8.25	5.00	7.50	314	4.34	7.85
220	X51517	TRUCK LIFT FORK + GAS 4000 LB SRT 100 IN. LH.	10.33	3.17	5.58	7.00	3.17	5.58	124	3.55	3.10
221	X51654	TRUCK LIFT FORK + GAS 4000 LB 180 IN. LH.	10.25	3.33	7.50	6.83	3.33	7.50	173	3.67	4.32
222	X51791	TRUCK LIFT FORK + GAS PT 6000 LB	13.42	5.42	9.50	10.08	5.42	9.50	521	5.35	13.02
223	X51928	TRUCK LIFT FORK + GAS PT 6000 LBS ROUGH	19.58	7.33	10.42	15.58	7.33	7.67	888	8.52	22.20
224	X52065	TRUCK LIFT FORK + GAS SRT 6000 LB 100 IN.	11.00	3.58	7.83	7.67	3.58	6.75	187	4.96	4.67
225	X52202	TRUCK LIFT FORK + GAS SRT 6000 LB 127 IN. LH.	11.08	3.67	6.92	7.58	3.67	6.92	195	5.33	4.87
226	X52339	TRUCK LIFT FORK + GAS SRT 6000 168 IN. LH.	11.25	3.58	8.75	8.00	3.58	8.75	255	4.76	6.37
227	X52476	TRUCK LIFT FORK + GAS PT 10,000 LB ROUGH	24.00	8.75	10.83	19.33	8.75	8.33	1,423	15.27	35.57
228	X52613	TRUCK LIFT FORK + GAS SRT 10,000 100 IN. LH.	12.08	4.42	6.67	8.67	4.42	5.67	218	6.69	5.45
229	X52750	TRUCK LIFT FORK + GAS PT 15,000 LB 210 IN.	16.50	7.83	12.42	12.50	7.83	12.42	1,233	11.19	30.82
230	X52818	TRUCK LIFT FORK + ROUGH TERRAIN 3000 LB.	14.33	6.33	6.00	11.17	6.33	6.00	426	1.70	10.65
231	X53161	TRUCK LIFT PLATFORM + ELEC 12,000 LBS CAP.	11.50	3.50	3.75	11.50	3.50	3.75	154	1.68	3.85
232	X56997	TRUCK STRADDLE-CARRY + GAS 30,000	15.92	8.00	14.67	15.92	8.00	12.67	1,621	8.28	40.62
233	Y35143	WATER PURIF EQUIP SET + DIATOMITE FILTER 420 GPH.	10.00	4.50	4.17	10.00	4.50	4.17	188	1.00	4.70
234	Y36445	WATER PURIF UNIT TRLR MTD + 600 GPH ELEC AC DC 115 V 1 PH 60 CY.	14.58	8.00	6.67	14.58	8.00	6.67	786	3.02	19.65
235	Y36582	WATER PURIF UNIT VAN BODY + ELEC DRVN AC DC 115-208 V 1-3 PH 60 CY.	21.50	8.17	7.33	21.50	8.17	7.33	1,289	5.10	32.22
236	Y36719	WATER PURIF UNIT VAN TYPE BODY + 1500 GPH.	16.75	8.25	7.67	16.33	8.25	7.42	1,002	4.05	25.05
237	Z30142	GEN ST GAS ENG TRLR MTD + 5 KW 60 CY PU 629.	12.25	6.08	6.92	12.25	6.08	5.33	403	1.79	10.07
238	Z50192	POWER PLANT UTILITY + (MUST)	9.58	6.25	7.58	9.58	6.25	7.58	457	2.30	11.42

Table 5–32. Class VII G (Communications-Electronics)—Weights and Cubes

1	1	2	3	4	5	6	7	8	9	10	11
			Operational dimensions			Reduced dimensions					
1	LIN	Item	Length	Width	Height	Length	Width	Height	Reduced cu ft	STON	Reduced MTON
			(Dimensions—ft)								
2	A40819	AMPLIFIER + AM-141/MRC	3.42	2.17	3.92	3.42	2.17	3.92	30	0.54	0.75
3	A52327	AMPLIFIER OSCILLATOR GROUP + OA-2180/FRT-51.	1.83	2.00	6.00	1.83	2.00	6.00	23	1.00	0.57
4	A52601	AMPLIFIER-POWER SUPPLY GROUP + AM-598/U.	1.00	0.83	0.92	1.00	0.83	0.92	1	0.01	0.02
5	A53012	AMPLIFIER-POWER SUPPLY GROUP + OA-442/GR.	1.67	1.33	2.25	1.67	1.33	2.25	5	0.10	0.12
6	A53149	AMPLIFIER-POWER SUPPLY GROUP + OA-3633/GRC.	1.08	1.25	0.50	1.08	1.25	0.50	1	0.01	0.02
7	A53560	AMPLIFIER RADIO FREQUENCY + AM-8/TRA-1.	1.92	1.42	1.33	1.92	1.42	1.33	4	0.04	0.10
8	A53917	AMPLIFIER RADIO FREQUENCY + AN-3979/FRC-93.	1.17	1.08	0.50	1.17	1.08	0.50	1	0.01	0.02
9	A53971	AMPLIFIER TRIGGER PULSE + AM-1220/FG.	1.58	1.17	0.58	1.58	1.17	0.58	1	0.02	0.02
10	B38070	BASE SHOCK MOUNT ELECTRICAL + MT-1029/VRC.	1.08	1.33	0.33	1.08	1.33	0.33	1	0.00	0.02
11	C44175	CABINET + CY-1050/GRC-26	5.08	1.67	1.67	5.08	1.67	1.67	15	0.09	0.37
12	C45888	CABINET ELECTRICAL EQUIPMENT + CY-979/URR.	1.67	1.17	0.92	1.67	1.17	0.92	2	0.00	0.05
13	C46025	CABINET ELECTRICAL EQUIPMENT + CY-1119/U.	1.83	2.00	7.08	1.83	2.00	7.08	27	0.15	0.67
14	C46710	CABINET ELECTRICAL EQUIPMENT + CY-2556/GT.	1.75	1.75	4.67	1.75	1.75	4.67	15	0.10	0.37
15	C47669	CABINET ELECTRICAL EQUIPMENT + MT-452/F.	1.50	1.83	6.58	1.50	1.83	6.58	19	0.04	0.47
16	D61303	CASE ACCESSORIES + CY-64/U	2.17	1.75	1.67	2.17	1.75	1.67	7	0.02	0.17
17	D67194	CASE + PLYWOOD OLIVE DRAB EMPTY 4 FT	4.75	1.00	1.50	4.75	1.00	1.50	7	0.03	0.17
18	D67605	CASE RECEIVER + CY-1339/TRC	1.67	1.42	1.50	1.67	1.42	1.50	4	0.02	0.10
19	D71030	CASE STANDARDIZED COMPONENTS ELECTRICAL + CY-1338/TRC.	1.67	1.42	1.50	1.67	1.42	1.50	4	0.01	0.10
20	E92915	CONTROL RADIO SET + AN/GSA-7	1.08	0.67	0.92	1.08	0.67	0.92	1	0.01	0.02
21	E93737	CONTROL RADIO SET + C-632/GRC-10	1.67	1.08	0.42	1.67	1.08	0.42	1	0.00	0.02
22	E94011	CONTROL RADIO SET + C-845/U	1.17	0.67	1.08	1.17	0.67	1.08	1	0.00	0.02
23	E94559	CONTROL RADIO SET + C-1123/U	0.92	0.92	0.50	0.92	0.92	0.50	1	0.00	0.02
24	E94696	CONTROL RADIO SET + C-1218/GR	1.08	1.58	0.42	1.08	1.58	0.42	1	0.01	0.02
25	E95057	CONTROL RADIO SET + C-6118/FRC-93	1.42	0.92	0.83	1.42	0.92	0.83	1	0.00	0.02
26	E95107	CONTROL RADIO SET + JB-70	1.17	1.58	0.67	1.17	1.58	0.67	1	0.01	0.02
27	F01430	CONVERTER FREQUENCY ELECTRONIC + CV-1716/GR.	1.33	1.58	0.42	1.33	1.58	0.42	1	0.01	0.02
28	G13410	DIRECTION FINDER SET + AN/TRD-17	5.00	2.00	1.92	5.00	2.00	1.92	19	0.18	0.47

29	L25677	KEYER + KY-79/UR	1.17	1.58	0.25	1.17	1.58	0.25	1	0.01	0.02
30	L25951	KEYER-OSCILLATOR +	1.58	0.83	0.42	1.58	0.83	0.42	1	0.00	0.02
31	M76351	MOUNTING + MT-297/GR	2.83	1.17	0.42	2.83	1.17	0.42	2	0.02	0.05
32	N26628	OSCILLATOR RADIO FREQUENCY + O-58/FR	1.58	1.17	0.83	1.58	1.17	0.83	2	0.02	0.05
33	N26765	OSCILLATOR RADIO FREQUENCY + O-39/TRA-7.	1.50	1.83	1.17	1.50	1.83	1.17	3	0.06	0.07
34	N44738	PACK MOUNTING GROUP + AN/PRA-1	1.83	1.83	1.17	1.83	1.83	1.17	4	0.01	0.10
35	P28998	POWER SUPPLY + RA-61	1.58	1.25	0.33	1.58	1.25	0.33	1	0.02	0.02
36	P31601	POWER SUPPLY + PP-109 GR	1.08	0.58	0.75	1.08	0.58	0.75	1	0.01	0.02
37	P31738	POWER SUPPLY + PP-112/GR	0.58	0.75	1.08	0.58	0.75	1.08	1	0.01	0.02
38	P31875	POWER SUPPLY + PP-115/TRC-8	1.25	1.17	0.67	1.25	1.17	0.67	1	0.03	0.02
39	P32697	POWER SUPPLY + PP-308/URR	0.83	1.08	0.50	0.83	1.08	0.50	1	0.01	0.02
40	P32971	POWER SUPPLY + PP-327/GRC-9Y	1.17	0.83	1.42	1.17	0.83	1.42	2	0.04	0.05
41	P33656	POWER SUPPLY + PP-454/FRT-5	1.58	1.25	0.67	1.58	1.25	0.67	2	0.04	0.05
42	P33793	POWER SUPPLY + PP-462/U	1.42	1.25	1.08	1.42	1.25	1.08	2	0.05	0.05
43	P34067	POWER SUPPLY + PP-629/URR	1.58	1.25	0.83	1.58	1.25	0.83	2	0.02	0.05
44	P40650	POWER SUPPLY + PP-3990/FRC-93	1.17	1.00	0.58	1.17	1.00	0.58	1	0.00	0.02
45	P40667	POWER SUPPLY + PP-4151/FRC-93	0.92	0.75	0.58	0.92	0.75	0.58	1	0.01	0.02
46	P40745	POWER SUPPLY + PP-4763/GRC	1.58	1.25	1.17	1.58	1.25	1.17	3	0.06	0.07
47	Q08886	RACK ELECTRICAL EQUIPMENT + MT-298/GR.	3.08	1.25	0.42	3.08	1.25	0.42	2	0.01	0.05
48	Q08887	RACK ELECTRICAL EQUIPMENT + MT-299/GR.	1.75	1.25	0.50	1.75	1.25	0.50	1	0.01	0.02
49	Q09023	RACK ELECTRICAL EQUIPMENT + MT-327/GR.	2.17	1.25	0.33	2.17	1.25	0.33	1	0.02	0.02
50	Q31797	RADIO SET + AN/GRC-41 LESS POWER	12.83	6.75	6.67	12.83	6.75	6.50	572	2.04	14.30
51	Q38393	RADIO SET + AN/SRC-6	1.08	1.17	2.08	1.08	1.17	2.08	3	0.02	0.07
52	Q41818	RADIO SET + AN/TRC-91	6.33	4.83	5.08	6.33	4.83	5.08	156	0.75	3.90
53	Q48307	RADIO SET + AN/VRC-19	2.00	0.92	1.58	2.00	0.92	1.58	3	0.06	0.07
54	Q49462	RADIO SET + AN/VRC-19YY	1.75	1.33	1.17	1.75	1.33	1.17	3	0.07	0.07
55	Q92529	RADIO TERMINAL SET + AN/TRC-80	8.33	6.67	5.75	8.33	6.67	5.75	319	2.40	7.97
56	R21353	RECEIVER RADIO + AN/URR-35C	1.58	1.50	0.67	1.58	1.50	0.67	2	0.02	0.05
57	R21764	RECEIVER RADIO + A1 A2 A3 TYPE EMISSION 2 TO 6 MC 2 BANDS.	1.17	1.00	0.58	1.17	1.00	0.58	1	0.01	0.02
58	R22449	RECEIVER RADIO + R-108/GRC	1.08	0.58	0.75	1.08	0.58	0.75	1	0.01	0.02
59	R22586	RECEIVER RADIO + R-109/GRC	1.08	0.58	0.75	1.08	0.58	0.75	1	0.01	0.02
60	R22723	RECEIVER RADIO + R-110/GRC	1.08	0.58	0.75	1.08	0.58	0.75	1	0.01	0.02
61	R22997	RECEIVER RADIO + R-125/GRC-10	1.08	0.92	1.08	1.08	0.92	1.08	1	0.01	0.02
62	R23134	RECEIVER RADIO + R-174/URR	0.75	1.08	0.50	0.75	1.08	0.50	1	0.00	0.02
63	R23271	RECEIVER RADIO + R-212/SR	1.17	1.42	0.83	1.17	1.42	0.83	2	0.02	0.05
64	R23408	RECEIVER RADIO + R-220/URR	1.58	0.83	1.25	1.58	0.83	1.25	2	0.04	0.05
65	R23956	RECEIVER RADIO + R-336/GRC-26	0.75	1.58	0.92	0.75	1.58	0.92	1	0.02	0.02
66	R24093	RECEIVER RADIO + R-388/URR	1.58	1.33	0.83	1.58	1.33	0.83	2	0.02	0.05
67	R24230	RECEIVER RADIO + R-389/URR	1.33	1.58	0.83	1.33	1.58	0.83	2	0.04	0.05
68	R24367	RECEIVER RADIO + R-390/URR	1.42	1.58	0.83	1.42	1.58	0.83	2	0.03	0.05
69	R24641	RECEIVER RADIO + R-392/URR	1.17	0.92	0.92	1.17	0.92	0.92	1	0.02	0.02
70	R24778	RECEIVER RADIO + R-394/U	1.17	0.83	0.75	1.17	0.83	0.75	1	0.01	0.02
71	R26011	RECEIVER RADIO + R-520/URR	1.42	0.67	0.92	1.42	0.67	0.92	1	0.01	0.02
72	R26970	RECEIVER RADIO + R-853/URR	1.33	0.67	1.00	1.33	0.67	1.00	1	0.00	0.02

Table 5-32. Class VII G (Communications—Electronics)—Weights and Cubes—Continued

1	1	2	3	4	5	6	7	8	9	10	11
			Operational dimensions			Reduced dimensions					
1	LIN	Item	Length	Width	Height	Length	Width	Height	Reduced cu ft	STON	Reduced MTON
			(Dimensions—ft)								
73	R31610	RECEIVER-TRANSMITTER RADIO + RT-66/GRC.	1.08	0.92	0.75	1.08	0.92	0.75	1	0.01	0.02
74	R31747	RECEIVER-TRANSMITTER RADIO + RT-67/GRC.	1.08	0.92	0.75	1.08	0.92	0.75	1	0.01	0.02
75	R31884	RECEIVER-TRANSMITTER RADIO + RT-68/GRC.	1.08	0.75	0.92	1.08	0.75	0.92	1	0.01	0.02
76	R33939	RECEIVER-TRANSMITTER RADIO + RT-524/VRC.	1.25	1.08	0.50	1.25	1.08	0.50	1	0.02	0.02
77	R34007	RECEIVER-TRANSMITTER RADIO + RT-718/FRC-93.	1.17	1.17	0.58	1.17	1.17	0.58	1	0.00	0.02
78	R37494	RECEIVING SET RADIO + AN/FRR-38	1.83	1.75	6.33	1.83	1.75	6.33	22	0.20	0.55
79	R37631	RECEIVING SET RADIO + AN/FRR-39	6.50	1.75	2.00	6.50	1.75	2.00	24	0.27	0.60
80	R38316	RECEIVING SET RADIO + AN/GRR-7	1.83	1.58	1.00	1.83	1.58	1.00	3	0.02	0.07
81	R39275	RECEIVING SET RADIO + OA-65/MRC-2	1.75	1.50	0.83	1.75	1.50	0.83	2	0.08	0.05
82	X15560	TRANSMITTER RADIO + F3 TYPE EMISSION 30 W MAX OUTPUT.	1.50	0.83	0.92	1.50	0.83	0.92	1	0.02	0.02
83	X16285	TRANSMITTER RADIO + T-235/GRC-10	1.08	0.92	1.08	1.08	0.92	1.08	1	0.01	0.02
84	X17341	TRANSMITTER RADIO + T-368/URT	2.42	2.58	3.42	2.42	2.58	3.42	22	0.35	0.55
85	X71683	TUNER RADIO FREQUENCY + BC-939	1.92	0.92	1.25	1.92	0.92	1.25	2	0.02	0.05
86	X73327	TUNER RADIO FREQUENCY + TN-339/GR	1.92	0.92	1.25	1.92	0.92	1.25	2	0.02	0.05

Table 5-33. Class VII K (Tactical Vehicles)—Weights and Cubes

1	1	2	3	4	5	6	7	8	9	10	11
			Operational dimensions			Reduced dimensions					
1	LIN	Item	Length	Width	Height	Length	Width	Height	Reduced cu ft	STON	Reduced MTON
			(Dimensions—ft)								
2	D09442	CARGO TRANSPORTER OFF-ROAD + LARGE WHEEL.	39.00	13.17	10.25	36.00	13.17	10.25	4,859	11.93	121.47
3	D10725	CARRIER 81 MILLIMETER MORTAR + FULL TRACKED (LESS MORTAR).	15.92	8.83	8.17	15.92	8.33	7.00	940	10.32	23.50
4	D10740	CARRIER 107 MILLIMETER MORTAR + SELF PROPELLED (LESS MORTAR).	15.83	9.17	7.08	15.83	8.25	6.42	848	10.14	21.20
5	D10990	CARRIER CARGO AMPHIBIOUS + TRACKED	15.67	7.00	7.00	15.08	6.83	7.00	722	3.80	18.05
6	D11015	CARRIER CARGO + FULL TRACKED COMMERCIAL.	20.17	9.00	8.75	20.17	9.00	8.75	1,588	6.75	39.70

7	D11048	CARRIER CARGO+ TRACKED 6 TON	19.33	8.75	8.92	19.17	8.33	7.17	1,163	7.50	29.07
8	D11401	CARRIER COMMAND AND RECONNAISSANCE+ ARMORED.	14.58	7.83	6.58	13.83	7.83	6.58	721	6.62	18.02
9	D11538	CARRIER COMMAND POST+ LIGHT TRACKED.	15.75	8.83	8.67	15.75	8.33	8.67	1,139	11.10	28.47
10	D11620	CARRIER FLAME THROWER+	15.92	8.83	8.17	15.92	8.33	7.67	1,025	10.66	25.62
11	D12086	CARRIER PERSONNEL FULL TRACKED+ ARMORED.	15.92	8.75	8.17	15.92	8.33	7.17	959	10.06	23.97
12	E02670	CHASSIS TRAILER+ GENERAL PURPOSE 3-1/2 TON 2 WHEEL W/E.	15.58	8.00	4.17	15.58	8.00	4.17	526	1.36	13.15
13	E02807	CHASSIS TRAILER+ GENERATOR 2-1/2 TON 2 WHEEL W/E.	13.83	7.75	3.33	13.83	7.75	3.33	366	1.20	9.15
14	E02944	CHASSIS TRAILER+ 2-1/2 TON TRAILING ARM 2 WHL.	14.58	7.92	3.67	14.58	7.92	3.67	431	1.37	10.77
15	G34815	DOLLY SET LIFT TRANSPORTABLE SHELTER+ 5-1/4 TON W/E.	9.83	8.00	5.00	9.83	8.00	5.00	397	1.75	9.92
16	G35089	DOLLY TRAILER CONVERTER+ 6 TON 2 WHEEL W/E.	9.25	7.75	4.42	9.25	7.75	4.42	321	1.49	8.02
17	G35226	DOLLY TRAILER CONVERTER+ 8 TON 2 WHEEL W/E.	9.83	8.17	4.83	9.83	8.17	4.83	390	1.66	9.75
18	G35363	DOLLY TRAILER CONVERTER+ 18 TON 4 WHEEL W/E.	12.08	8.08	4.92	9.25	8.08	4.92	374	3.06	9.35
19	K90188	INSTRUMENT REPAIR SHOP TRUCK MOUNTED+ 2-1/2 TON 6×6 W/E.	22.33	8.17	10.75	22.00	8.08	10.75	1,933	8.43	48.32
20	K90193	INSTRUMENT REPAIR SHOP TRUCK MOUNTED+ 2-1/2 TON 6×6 W/WINCH W/E.	23.58	8.25	10.67	23.08	8.25	10.67	2,057	8.71	51.42
21	S69832	SEMITRAILER ELECTRICAL REPAIR SHOP + 6 TON.	27.25	8.00	10.67	26.67	8.00	10.67	2,293	9.20	57.32
22	S70106	SEMITRAILER LOW BED+ WRECKER 12 TON 3 WHEEL 25 FT W/E.	35.00	8.08	10.08	34.75	8.08	6.00	1,707	7.13	42.67
23	S70243	SEMITRAILER LOW BED+ WRECKER 12 TON 4 WHEEL 40 FT W/E.	49.67	8.08	10.08	49.42	8.08	6.83	2,740	8.79	68.50
24	S70517	SEMITRAILER LOW BED+ 25 TON 4 WHEEL W/E.	34.83	9.58	5.50	34.58	9.58	5.50	1,839	8.14	45.97
25	S70791	SEMITRAILER LOW BED+ 60 TON 8 WHEEL W/E.	37.17	11.92	7.42	37.17	11.92	7.42	3,317	16.44	82.92
26	S70928	SEMITRAILER MAINTENANCE+ WEAPON CONNECTING UNIT 6T 2 WHEEL W/E.	23.83	8.08	11.33	22.83	8.08	11.17	2,076	9.10	51.90
27	S71065	SEMITRAILER MAINTENANCE+ WEAPON ELECTRICAL UNIT 6T 2 WHEEL W/E.	23.17	8.08	11.33	22.83	8.08	11.17	2,076	7.30	51.90
28	S71202	SEMITRAILER MAINTENANCE+ WEAPON MECHANICAL UNIT 6T 2 WHEEL W/E.	23.17	8.08	11.33	22.83	8.08	11.17	2,076	6.40	51.90
29	S71339	SEMITRAILER MAINTENANCE MACHINE SHOP+ 12 TON.	26.67	8.08	9.67	26.67	8.08	9.67	2,108	11.52	52.70
30	S71613	SEMITRAILER REFRIGERATOR+ 7-1/2 TON W/UNIT.	23.58	8.08	10.92	23.58	8.08	10.92	2,104	4.16	52.60
31	S71750	SEMITRAILER SPECIAL+ 6 TON	24.33	8.17	10.67	24.33	8.17	10.67	2,128	3.40	53.20
32	S71887	SEMITRAILER STAKE+ 6 TON 2 WHEEL W/E	22.92	7.92	8.83	22.92	7.92	4.83	888	3.57	22.20
33	S72024	SEMITRAILER STAKE+ 12 TON 4 WHEEL W/E	29.25	8.08	8.92	29.25	8.08	4.92	1,190	6.99	29.75

Table 5-33. Class VII K (Tactical Vehicles)—Weights and Cubes—Continued

1	1	2	3	4	5	6	7	8	9	10	11
			Operational dimensions			Reduced dimensions			Reduced cu ft	STON	Reduced MTON
1	LIN	Item	Length	Width	Height	Length	Width	Height			
			(Dimensions—ft)								
34	S72298	SEMITRAILER TANK+ 6 TON 1500 GAL BITUMIN LIQ W/DOLLY.	21.50	8.00	9.75	17.17	8.00	9.08	1,252	5.13	31.30
35	S72435	SEMITRAILER TANK+ 9 TON 1800 GAL	24.33	8.17	11.17	24.17	8.17	11.17	2,209	8.47	55.22
36	S72846	SEMITRAILER TANK+ FUEL 5000 GALLON 12 TON 4 WHEEL W/E.	31.08	8.08	8.83	31.08	8.08	8.83	2,253	6.23	56.32
37	S72983	SEMITRAILER TANK+ FUEL SERVICING 5000 GALLON 12 TON 4 WHEEL W/E.	31.33	8.00	9.00	31.33	8.00	9.00	2,288	7.73	57.20
38	S73120	SEMITRAILER TANK+ WATER 2000 GALLON 2 WHEEL W/E.	20.58	7.92	7.83	20.58	7.92	7.83	1,286	3.21	32.15
39	S73394	SEMITRAILER TANK TRANSPORTER+ 50 TON 8 WHEEL W/E.	39.75	12.42	9.58	39.50	10.33	7.83	3,221	22.93	80.52
40	S73531	SEMITRAILER VAN+ CARGO 6 TON 2 WHEEL W/E.	23.17	8.08	11.17	22.92	8.08	11.17	2,069	3.78	51.72
41	S73668	SEMITRAILER VAN+ 6 TON 2 WHEEL W/E	22.33	7.92	11.00	22.33	7.92	11.00	1,951	10.10	48.77
42	S74079	SEMITRAILER VAN+ CARGO 12 TON 4 WHEEL W/E.	30.00	8.08	12.08	29.50	8.08	12.08	2,899	7.61	72.47
43	S74216	SEMITRAILER VAN+ ELECTRONIC 3-6 TON 2 WHEEL 26 FT BODY W/E.	27.33	8.17	11.00	27.08	8.17	11.00	2,458	4.41	61.45
44	S74353	SEMITRAILER VAN+ ELECTRONIC 3-6 TON 2 WHEEL 30 FT BODY W/E.	31.42	8.00	10.83	31.25	8.00	10.83	2,715	4.71	67.87
45	S74490	SEMITRAILER VAN+ EXPANSIBLE 6 TON 4 WHEEL W/E.	27.25	8.17	11.25	26.75	8.17	11.25	2,487	8.17	62.17
46	S74627	SEMITRAILER VAN+ MEDICAL 3 TON 2 WHEEL W/E.	31.00	7.92	10.92	31.00	7.92	10.92	2,693	4.75	67.32
47	S74832	SEMITRAILER VAN+ REPAIR PARTS STORAGE 6 TON 4 WHEEL W/E.	27.42	8.17	11.25	26.75	8.17	10.75	2,360	8.60	59.00
48	S75038	SEMITRAILER VAN+ SHOP 6 TON 2 WHEEL W/E.	23.25	8.08	10.92	23.08	8.08	10.92	2,054	3.66	51.35
49	S75175	SEMITRAILER VAN+ SUPPLY 12 TON 4 WHEEL W/E.	29.92	8.08	11.83	28.75	8.08	11.83	2,763	7.55	69.07
50	W93961	TRAILER AIRCRAFT CARGO LOADING-UNLOADING+ 3-1/2 TON 4 WHEEL W/E.	14.50	5.42	2.67	14.50	5.42	2.67	211	1.08	5.27
51	W94030	TRAILER AMMUNITION+ 1-1/2 TON 2 WHEEL W/E.	12.33	7.83	5.25	12.33	7.83	4.75	470	1.37	11.75
52	W94441	TRAILER BASIC UTILITY+ 2-1/2 TON 2 SINGLE WHEELS W/E.	19.33	8.00	3.92	15.33	8.00	3.67	452	1.30	11.30
53	W94578	TRAILER BOLSTER+ POLE HAULING 3-1/2 TON 2 WHEEL W/E.	15.17	6.83	5.67	15.17	6.83	5.67	587	1.26	14.67
54	W94715	TRAILER BOLSTER+ SWIVEL BOLSTER ADJ STANCHIONS 2-1/2 TON W/E.	11.83	8.25	7.17	11.83	8.25	7.17	704	1.09	17.60

55	W94852	TRAILER BOLSTER + SWIVEL BOLSTER 9 TON 4 DUAL WHEELS W/E.	16.00	7.83	5.33	16.00	7.83	5.33	672	3.07	16.80
56	W95263	TRAILER CABLE REEL + 3-1/2 TON 2 WHEEL W/E.	12.42	7.33	5.33	12.42	7.33	4.17	388	0.82	9.70
57	W95400	TRAILER CARGO + 1/4 TON 2 WHEEL W/E....	9.00	5.08	3.67	9.00	5.08	3.67	170	0.29	4.25
58	W95537	TRAILER CARGO + 3/4 TON 2 WHEEL W/E....	12.25	6.08	6.92	12.25	6.08	4.17	313	0.67	7.82
59	W95674	TRAILER CARGO TOOL MTG + 3/4 TON.....	12.33	6.25	6.00	12.33	6.25	6.00	464	0.90	11.60
60	W95811	TRAILER CARGO + 1-1/2 TON 2 WHEEL W/E.	13.83	6.92	8.17	13.83	6.92	4.58	439	1.33	10.97
61	W96701	TRAILER FLAT BED + TILT LOADING 6 TON 4 WHEEL W/E.	23.33	8.00	2.83	23.33	8.00	2.83	538	1.90	13.45
62	W96907	TRAILER FLAT BED + 10 TON 4 WHEEL W/E.	28.17	8.08	5.25	28.17	8.08	5.25	1,216	5.96	30.40
63	W97455	TRAILER LOW BED + 8 TON DUAL WHEELS W/E.	23.75	8.58	4.75	19.83	8.58	4.75	817	5.14	20.42
64	W97592	TRAILER LOW BED + 60 TON 4 DUAL FRONT WHEEL 8 DUAL REAR WHEEL W/E.	46.75	10.00	5.42	37.17	10.00	5.42	2,018	17.05	50.45
65	W97729	TRAILER MAINTENANCE + TELEPHONE CABLE SPLICER 1/4 TON 2 WHEEL W/E.	9.00	4.67	3.50	9.00	4.67	3.50	150	0.47	3.75
66	W97866	TRAILER OXYGEN SERVICING + 3 WHL.....	10.92	5.00	4.25	8.92	5.00	4.25	192	0.52	4.80
67	W98516	TRAILER RETRIEVER SGL + TRK 158 IN L 85 IN W 30 IN H 3130 LB.	12.58	7.25	2.67	11.42	7.25	2.67	228	1.76	5.70
68	W98619	TRAILER STAKE + PLATFORM UTILITY 3/4 TON 4 WHEEL W/E.	13.58	4.33	4.33	9.50	4.33	3.50	144	0.37	3.60
69	W98825	TRAILER TANK + WATER 400 GALLON 1-1/2 TON 2 WHEEL W/E.	13.42	6.67	6.58	13.42	6.67	6.58	603	1.42	15.07
70	X38639	TRUCK AMBULANCE + 1/4 TON 4×4 W/E....	13.50	5.92	6.17	11.92	5.42	4.33	282	1.30	7.05
71	X38776	TRUCK AMBULANCE + 3/4 TON 4×4 WE.....	17.00	6.92	7.50	16.58	6.25	7.50	792	3.45	19.80
72	X38913	TRUCK AMBULANCE + 3/4 TON 4×4 W/ WINCH W/E.	17.58	6.83	7.67	17.08	6.25	7.67	823	3.62	20.57
73	X38951	TRUCK AMBULANCE + 1-1/4 TON 4×4 W/E..	17.58	7.08	7.83	17.58	6.83	7.83	956	3.19	23.90
74	X39050	TRUCK BOLSTER + 2-1/2 TON 6×6 W/WINCH W/E.	22.92	7.83	8.17	22.92	7.83	6.67	1,197	6.53	29.92
75	X39187	TRUCK BOLSTER + 5 TON 6×6 W/WINCH W/E.	25.83	8.08	9.17	25.83	8.08	7.08	1,488	9.49	37.20
76	X39392	TRUCK CAMERA MAP REPRODUCTION + 2-1/2 TON.	27.67	8.00	10.83	27.17	8.00	10.83	2,364	9.42	59.10
77	X39735	TRUCK CARGO + 3/4 TON 4×4 W/E.....	15.42	7.00	7.58	15.42	6.25	5.33	521	2.83	13.02
78	X39872	TRUCK CARGO + 3/4 TON 4×4 W/WINCH W/E.	15.83	7.00	7.58	15.83	6.25	5.33	535	2.90	13.37
79	X39883	TRUCK CARGO + 1-1/4 TON 4×4 W/E.....	17.50	7.08	7.75	17.50	6.83	4.92	595	2.73	14.87
80	X39906	TRUCK CARGO + 1-1/4 TON 4×4 W/WINCH W/E.	18.33	7.08	7.75	18.33	6.83	4.92	624	2.94	15.60
81	X39940	TRUCK CARGO + 1-1/4 TON 6×6 W/E.....	18.92	7.08	7.83	18.83	7.08	5.58	754	3.68	18.85
82	X40009	TRUCK CARGO + 2-1/2 TON 6×6 W/E.....	22.00	8.00	9.50	22.00	8.00	6.75	1,202	6.53	30.05
83	X40077	TRUCK CARGO + DROP SIDE 2-1/2 TON 6×6 W/E.	22.00	8.00	9.50	22.00	8.00	6.75	1,202	6.53	30.05
84	X40146	TRUCK CARGO + 2-1/2 TON 6×6 W/WINCH W/E.	23.17	8.00	9.50	23.17	8.00	6.75	1,264	6.85	31.60
85	X40214	TRUCK CARGO + DROP SIDE 2-1/2 TON 6×6 W/WINCH W/E.	23.17	8.00	9.50	23.17	8.00	6.75	1,264	6.85	31.60
86	X40283	TRUCK CARGO + 2-1/2 TON 6×6 XLWB W/E.	27.42	7.92	10.58	27.42	7.92	6.67	1,456	7.30	36.40

Table 5-33. Class VII K (Tactical Vehicles)—Weights and Cubes—Continued

1	1	2	3	4	5	6	7	8	9	10	11
			Operational dimensions			Reduced dimensions			Reduced cu ft	STON	Reduced MTON
1	LIN	Item	Length	Width	Height	Length	Width	Height			
			(Dimensions—ft)								
87	X40420	TRUCK CARGO+ 2-1/2 TON 6×6 XLWB W/ WINCH W/E.	28.50	7.92	10.58	28.50	7.92	6.67	1,516	7.55	37.90
88	X40557	TRUCK CARGO+2-1/2 TON 6×6 XLWB W/ACQ ANT TRANS KIT W/E.	27.00	8.00	10.33	27.00	8.00	6.75	1,458	6.75	36.45
89	X40694	TRUCK CARGO+ 2-1/2 TON 6×6 XLWB W/WINCH W/ACQ ANT TRANS KIT W/E.	28.50	7.92	8.50	28.50	7.92	6.67	1,530	7.72	38.25
90	X40831	TRUCK CARGO+ 5 TON 6×6 LWB W/E	24.75	8.17	9.75	24.75	8.17	7.08	1,440	10.17	36.00
91	X40931	TRUCK CARGO+ DROP SIDE 5 TON 6×6 W/WINCH W/E.	24.75	8.17	9.75	24.75	8.17	7.08	1,440	10.17	36.00
92	X40968	TRUCK CARGO+ 5 TON 6×6 LWB W/WINCH W/E.	26.00	8.17	9.75	26.00	8.17	7.08	1,515	10.53	37.87
93	X41105	TRUCK CARGO+ 5 TON 6×6 XLWB W/E	31.33	8.08	10.00	31.33	8.08	7.50	1,918	11.48	47.95
94	X41242	TRUCK CARGO+5 TON 6×6 XLWB W/WINCH W/E.	32.42	8.17	10.92	32.42	8.17	7.50	1,988	11.72	49.70
95	X41310	TRUCK CARGO+ 5 TON 8×8 W/E	23.00	7.92	10.75	23.00	7.92	6.67	1,220	7.80	30.50
96	X41653	TRUCK CARGO+ 8 TON 4×4 W/E	31.92	9.00	8.17	31.92	9.00	8.17	2,370	13.50	59.25
97	X41790	TRUCK CARGO+10 TON 6×6 W/WINCH W/E.	27.83	9.58	10.83	27.83	9.58	7.50	2,001	16.40	50.02
98	X42886	TRUCK CONTACT MAINTENANCE+3/4 TON.	17.75	7.08	6.67	17.75	7.08	6.25	791	4.20	19.77
99	X43228	TRUCK DUMP+ 3/4 TON 4×4 W/E	15.83	7.00	7.58	15.83	6.25	5.33	534	3.74	13.35
100	X43297	TRUCK DUMP+ 2-1/2 TON 6×6 W/E	21.67	7.92	8.58	21.67	7.92	6.67	1,160	7.61	29.00
101	X43434	TRUCK DUMP+ 2-1/2 TON 6×6 W/WINCH W/E.	23.00	7.92	8.58	23.00	7.92	6.67	1,230	8.08	30.75
102	X43708	TRUCK DUMP+ 5 TON 6×6 W/E	22.17	8.08	9.25	22.17	8.08	7.33	1,337	11.28	33.42
103	X43845	TRUCK DUMP+ 5 TON 6×6 W/WINCH W/E	23.42	8.08	9.25	23.42	8.08	7.33	1,415	11.82	35.37
104	X48815	TRUCK LABORATORY MAP REPRODUCTION+ 2-1/2 TON.	27.50	8.00	11.00	27.08	8.00	11.00	2,398	8.70	59.95
105	X53572	TRUCK MAINTENANCE+ TELEPHONE 3/4 TON 4×2 W/E.	18.08	6.00	5.88	18.08	6.00	5.83	649	3.17	16.22
106	X53709	TRUCK MAINTENANCE+ TELEPHONE 3/4 TON 4×4 W/WINCH W/E.	17.00	6.67	7.83	17.00	6.25	5.58	593	3.47	14.82
107	X53775	TRUCK MAINTENANCE+ TELEPHONE 1-1/4 TON 4×4 W/WINCH W/E.	18.42	7.08	7.42	18.42	7.08	5.58	728	3.35	18.20
108	X53846	TRUCK MAINTENANCE+ TELEPHONE CONSTRUCTION 2-1/2 TON 6×6 W/WN W/E.	22.83	7.83	10.00	22.83	7.83	9.25	1,678	8.15	41.95
109	X53983	TRUCK MAINTENANCE+ EARTH BORER POLE SETTER 2-1/2 T 6×6 W/WN W/E.	25.50	7.25	8.17	25.50	7.25	6.83	1,282	8.41	32.05
110	X54120	TRUCK MAINTENANCE+ GENERAL PURPOSE REPAIR SHOP 2-1/2 TON.	28.00	8.08	10.08	28.00	8.08	10.08	2,304	9.68	57.60
111	X54257	TRUCK MAP REPRODUCTION+ 2-1/2 TON	26.58	8.25	9.75	26.58	8.25	9.75	2,138	11.34	53.45
112	X54394	TRUCK MAP REPRODUCTION+ 2-1/2 TON W/DARK ROOM EXT.	26.58	8.25	9.75	26.58	8.25	9.75	2,138	11.34	53.45

113	X55079	TRUCK PHOTOGRAPHIC MAP REPRODUCTION + 2-1/2 TON.	27.00	8.17	10.83	27.00	8.17	10.83	2,419	9.22	60.47
114	X55216	TRUCK MAINTENANCE + PIPELINE CONSTRUCTION 2-1/2 TON 6×6 W/WN/W/E.	23.92	8.17	9.00	23.92	8.17	8.33	1,641	8.28	41.02
115	X55253	TRUCK PLATE GRAINER MAP REPRODUCTION + 2-1/2 TON.	27.50	8.00	11.00	27.08	8.00	11.00	2,398	8.62	59.95
116	X55287	TRUCK PLATE PROCESS MAP REPRODUCTION + 2-1/2 TON.	27.17	8.08	10.92	26.67	8.08	10.92	2,368	8.40	59.20
117	X55696	TRUCK PRESS MAP REPRODUCTION + 2-1/2 TON.	27.00	8.08	10.92	27.00	8.08	10.92	2,404	8.57	60.10
118	X56586	TRUCK STAKE + 5 TON 6×6 W/WINCH W/E.	31.08	9.58	9.50	31.08	9.58	7.42	2,209	13.27	55.22
119	X57271	TRUCK TANK + FUEL SERVICING 2-1/2 TON 6×6 W/E.	22.00	7.92	8.08	22.00	7.92	7.67	1,348	7.23	33.70
120	X57408	TRUCK TANK + FUEL SERVICING 2-1/2 TON 6×6 W/WINCH W/E.	23.00	8.00	7.83	23.00	8.00	7.42	1,367	7.59	34.17
121	X58093	TRUCK TANK + FUEL SERVICING 2500 GALLON 4×4 W/E.	32.83	9.33	8.83	32.83	9.33	8.83	2,711	14.46	67.77
122	X58367	TRUCK TANK + WATER 1000 GALLON 2-1/2 TON 6×6 W/E.	22.00	7.92	8.17	22.00	7.92	7.42	1,293	6.91	32.32
123	X58504	TRUCK TANK + WATER 1000 GALLON 2-1/2 TON 6×6 W/WINCH W/E.	23.00	7.92	8.08	23.00	7.92	7.75	1,414	7.79	35.35
124	X59052	TRUCK TRACTOR + 2-1/2 TON 6×6 W/E.	19.08	7.75	8.25	19.08	7.75	6.75	1,012	5.69	25.30
125	X59189	TRUCK TRACTOR + 2-1/2 TON 6×6 W/WINCH W/E.	20.33	7.75	8.25	20.33	7.75	6.75	1,076	5.99	26.90
126	X59326	TRUCK TRACTOR + 5 TON 6×6 W/E.	21.50	8.17	9.50	21.50	8.17	7.08	1,253	9.28	31.32
127	X59463	TRUCK TRACTOR + 5 TON 6×6 W/WINCH W/E.	22.75	8.17	9.50	22.75	8.17	7.08	1,325	9.62	33.12
128	X59505	TRUCK TRACTOR + 5 TON 8×8 W/WINCH W/E.	24.83	8.00	8.92	24.83	7.67	6.50	1,238	8.35	30.95
129	X59600	TRUCK TRACTOR + 10 TON 6×6 W/DUAL MIDSHIP WN W/HI MTD 5TH WHL W/E.	25.67	10.92	9.42	25.67	10.92	9.42	2,666	24.15	66.65
130	X59737	TRUCK TRACTOR + 10T 6×6 W/DUAL MIDSHIP WN W/LOW MTD 5TH WHEEL W/E.	24.08	9.50	10.00	24.08	9.50	10.00	2,294	14.47	57.35
131	X59874	TRUCK TRACTOR + 10 TON 6×6 W/MIDSHIP WINCH W/LOW MTD 5TH WHL W/E.	24.00	9.50	7.58	24.00	9.50	7.58	1,742	13.94	43.55
123	X60696	TRUCK TRACTOR WRECKER + 5 TON 6×6 W/WINCH W/E.	29.33	8.08	10.92	29.33	8.08	9.50	2,280	16.37	57.00
133	X60833	TRUCK UTILITY + 1/4 TON 4×4 W/E.	11.00	5.58	5.92	11.00	5.25	4.33	257	1.19	6.42
134	X60970	TRUCK UTILITY + 1/4 TON 4×4 W/WINCH W/E.	11.08	5.17	6.17	11.08	5.17	4.58	263	1.41	6.57
135	X61244	TRUCK UTILITY + 1/4 TON 4×4 CARRIER FOR 106 MM RIFLE W/E.	10.92	5.92	5.25	10.92	5.25	4.33	252	1.37	6.30
136	X61381	TRUCK UTILITY + 1/4 TON 4×4 FOR DAVY CROCKETT W/E.	11.25	6.08	5.58	11.17	5.33	4.67	282	1.47	7.05
137	X61929	TRUCK VAN + EXPANSIBLE 2-1/2 TON 6×6 W/E.	27.67	8.17	11.00	27.42	8.17	11.00	2,485	10.67	62.12
138	X62066	TRUCK VAN + EXPANSIBLE 2-1/2 TON 6×6 W/WINCH W/E.	28.50	8.17	11.00	28.25	8.17	11.00	2,566	9.99	64.15
139	X62203	TRUCK VAN + EXPANSIBLE 2-1/2 TON 6×6 W/HYDRAULIC LIFT GATE W/E.	27.67	8.17	11.00	27.42	8.17	11.00	2,485	10.90	62.12
140	X62237	TRUCK VAN + EXPANSIBLE 5 TON 6×6 W/E.	29.58	8.25	11.42	29.58	8.25	11.42	2,786	13.13	69.65

Table 5-33. Class VII K (Tactical Vehicles)—Weights and Cubes—Continued

1	LIN	Item	Operational dimensions (Dimensions—ft) Length	Width	Height	Reduced dimensions (Dimensions—ft) Length	Width	Height	Reduced cu ft	STON	Reduced MTON
141	X62340	TRUCK VAN + SHOP 2-1/2 TON 6×6 W/E	22.33	8.17	10.83	22.08	8.00	10.83	1,914	8.15	47.85
142	X62477	TRUCK VAN + 2-1/2 TON 6×6 W/WINCH W/E	23.42	8.17	10.83	23.17	8.17	10.83	2,053	7.66	51.32
143	X62888	TRUCK WRECKER + CRANE 2-1/2 TON 6×6 W/E.	24.08	8.00	8.42	24.08	8.00	8.42	1,622	9.68	40.55
144	X63025	TRUCK WRECKER + CRANE 2-1/2 TON 6×6 W/WINCH W/E.	25.25	8.00	8.75	25.25	8.00	8.42	1,700	9.89	42.50
145	X63094	TRUCK WRECKER + 3/4 TON 4×4 W/E	17.92	6.33	7.83	17.92	6.33	7.83	899	3.76	22.47
146	X63162	TRUCK WRECKER + 2-1/2 TON 6×6 W/ WINCH W/E.	25.17	8.00	8.92	25.17	8.00	8.92	1,795	11.90	44.87
147	X63299	TRUCK WRECKER + 5 TON 6×6 W/WINCH W/E.	29.08	8.17	9.50	29.08	8.17	8.92	2,124	17.44	53.10
148	X63436	TRUCK WRECKER + 10 TON 4×4 W/E	34.00	9.00	9.83	34.00	9.00	9.83	3,010	20.33	75.25

Section V. CLASS II, IV, AND VIII SUPPLY

5-21. Class II Supply

Table 5-38 provides weights and cubes for class II E, general supply items, for TOE units.

Table 5-34. Class VII L (Missiles)—Weights and Cubes

1	LIN	Item	Operational dimensions (Dimensions—ft) Length	Width	Height	Reduced dimensions (Dimensions—ft) Length	Width	Height	Reduced cu ft	STON	Reduced MTON
2	A02936	ACCESSORY KIT LOADING RACK+(NIKE-HERCULE).	3.75	0.25	0.50	3.75	0.25	0.50	1	0.02	0.02
3	A81439	ANTENNA-RECEIVER-TRANSMITTER-GP MISSILE TRACKING+ TLR MTD (HERC).	28.17	8.58	11.83	21.33	8.58	11.83	2,174	6.44	54.35
4	A81576	ANTENNA-RECVR-TRANSMITTER GP TARGET TRACKING+ TLR MTD (IMP HERC).	28.17	8.58	11.92	21.33	8.58	11.92	2,191	6.38	54.77
5	A81713	ANTENNA-RECEIVER-TRANSMITTER-GP TARGET TRACKING+ TLR MTD (HERC).	28.17	8.58	11.92	21.33	8.58	11.92	2,191	6.41	54.77
6	A81850	ANTENNA-RECEIVER-TRANSMITTER GROUP TARGET RNG+ TLR MTD IMP-HERC.	28.17	8.33	11.25	21.33	8.33	11.25	2,007	6.43	50.17

7	D13271	CART ASSEMBLY TRANSPORT + 762MM ROCKET W/E (HONEST-JOHN).	12.25	6.00	3.42	12.25	6.00	3.42	254	0.42	6.35
8	D13956	CART ROCKET TRANSPORT + 318MM W/E (LITTLE JOHN).	17.00	4.75	3.75	17.00	4.75	2.58	211	0.38	5.27
9	E02533	CHASSIS TRAILER + 2-TON 2-WHEEL W/E (HAWK).	15.67	8.08	3.83	15.67	8.08	3.83	496	1.83	12.40
10	E82469	CONSOLE ASSAULT FIRE COMMAND GUIDED MISSILE + W/E (HAWK).	3.08	3.00	2.92	3.08	3.00	2.92	27	0.24	0.67
11	E88120	CONTROL BOX GUIDED MISSILE LAUNCHING SECTION + W/E (HAWK).	1.67	1.08	1.25	1.67	1.08	1.25	2	0.02	0.05
12	E89627	CONTROL INDICATOR + (NIKE-HERCULES).	4.75	3.08	2.25	4.75	3.08	2.25	34	0.29	0.85
13	E90038	CONTROL INDICATOR + W/E (NIKE-HERCULES).	3.08	2.17	2.33	3.08	2.17	2.33	16	0.14	0.40
14	F77675	DATA CONVERTER COORDINATED AIR DEFENSE SYSTEMS + AN/GSA-77.	2.50	1.75	1.00	2.50	1.75	1.00	5	0.07	0.12
15	G14047	DIRECTOR STATION GUIDED MISSILE TRAILER MOUNTED + ATBM (IMP-HERC).	28.50	8.00	10.67	21.75	8.00	10.67	1,860	7.19	46.50
16	G14184	DIRECTOR STATION GUIDED MISSILE TRAILER MOUNTED + (IMP-NIKE-HERC).	28.17	8.00	10.67	21.83	8.00	10.67	1,879	7.21	46.97
17	G14458	DIRECTOR STATION GUIDED MISSILE TRAILER MOUNTED + W/E (NIKE-HERC).	28.25	8.00	12.17	21.83	8.00	10.67	1,893	6.99	47.32
18	H01957	ELECTRONIC SHOP TRAILER MOUNTED + W/E (NIKE-HERCULES).	26.50	8.00	10.67	19.92	8.00	10.67	1,714	4.88	42.85
19	H14752	ERECTOR-LAUNCHER GUIDED MISSILE SEMITRAILER MOUNTED + (PERSHING).	32.00	8.00	9.42	32.00	8.00	9.42	2,411	9.01	60.27
20	H14889	ERECTOR-LAUNCHER GUIDED MISSILE TRANSPORTABLE + W/E (PERSHING).	20.17	6.83	7.83	20.17	6.83	7.83	1,098	2.96	27.45
21	J92723	GROUND CONTROL STATION + AN/ARM-80 (TARGET).	3.67	1.92	2.42	3.67	1.92	2.42	18	0.18	0.45
22	J95392	GUIDED MISSL BATRY CONTROL CENTRAL TRL MTD + AN/MSW-9(XO-1) (HAWK).	18.67	8.00	11.00	18.67	8.00	11.00	1,646	4.10	41.15
23	K12718	HANDLING UNIT ROCKET TRAILER MOUNTED + 762MM W/E (HONEST JOHN).	28.00	8.17	11.00	28.00	8.17	7.00	1,616	5.00	40.40
24	K12855	HANDLING UNIT ROCKET TRUCK MOUNTED + 318MM W/E (LITTLE JOHN).	28.50	7.92	11.92	28.50	7.92	6.67	1,516	7.72	37.90
25	K27486	HEATING AND TIE-DOWN UNIT 762MM ROCKET TRK MTD + W/E (HONEST-JN).	32.50	8.17	9.58	32.50	8.08	8.17	2,165	13.28	54.12
26	L44629	LAUNCHER GUIDED MISSILE CARRIER MO UNITED + (HAWK).	19.75	8.33	8.75	19.75	8.33	8.75	1,440	11.26	36.00
27	L44712	LAUNCHER MONORAIL GUIDED MISSILE + W/E (NIKE-HERCULES).	22.83	7.83	2.67	22.83	7.83	2.67	486	6.00	12.15
28	L45016	LAUNCHER ROCKET AIRCRAFT + 2.75 INCH.	4.58	1.08	0.83	4.58	1.08	0.83	5	0.02	0.12
29	L45397	LAUNCHER ROCKET + 318MM W/E (LITTLE-JOHN).	18.00	5.25	4.08	18.00	5.25	4.08	388	0.69	9.70
30	L45534	LAUNCHER ROCKET + 762MM TRUCK MOUNTED W/E (HONEST-JOHN).	42.75	10.00	12.25	42.75	10.00	12.25	5,255	21.34	131.37
31	L45671	LAUNCHER ROCKET + 762MM W/E (HONEST-JOHN).	28.83	7.83	4.50	28.83	7.83	4.50	1,016	2.30	25.40
32	L45808	LAUNCHER ZERO LENGTH GUIDED MISSILE + W/E (HAWK).	14.33	8.00	7.67	9.75	8.00	7.67	598	2.13	14.95

Table 5-34. Class VII L (Missiles)—Weights and Cubes—Continued

1	1	2	3	4	5	6	7	8	9	10	11
			Operational dimensions			Reduced dimensions			Reduced cu ft	STON	Reduced MTON
1	LIN	Item	Length	Width	Height	Length	Width	Height			
			(Dimensions—ft)								
33	L46445	LAUNCHING CONTROL GROUP GUIDED MISSILE TRAILER MOUNTED + W/E (HERC).	26.50	8.00	10.67	19.67	8.00	10.67	1,702	4.82	42.55
34	L46719	LAUNCHING STATION GUIDED MISSILE SEMITRAILER MOUNTED + (SERGEANT).	31.92	7.83	7.83	31.92	7.83	7.83	1,969	8.55	49.22
35	L46729	LAUNCHING STATION GUIDED MISSILE SEMITRAILER MTD + 4 WHEEL (SGT).	31.92	7.83	7.83	31.92	7.83	7.83	1,969	8.55	49.22
36	L46856	LAUNCHING STATION GUIDED MISSILE SEMITRAILER MOUNTED + 4 WH (SGT).	31.92	7.83	7.83	31.92	7.83	7.83	1,969	7.90	49.22
37	M62679	MODIFICATION KIT GUIDED MISSILE LAUNCHER + TRANSPORTER KIT (HERC).	9.83	3.58	3.58	9.83	3.58	3.58	131	1.04	3.27
38	P68864	PROGRAMMER TEST STATION GUIDED MISSILE TRANSPORTABLE + (PERSHING).	8.33	6.67	6.00	8.33	6.67	6.00	333	2.24	8.32
39	Q09982	RACK LOADING GUIDED MISSILE + (NIKE-HERC).	10.92	1.33	1.67	10.25	0.58	1.67	11	0.19	0.27
40	Q17606	RADAR SET + CW ACQUISITION TRAILER MOUNTED W/E (HAWK).	14.25	7.83	10.33	16.00	8.17	7.67	1,002	2.24	25.05
41	Q17880	RADAR SET + HIGH POWERED CW ILLUMINATOR TRAILER MOUNTED W/E (HAWK).	16.17	8.00	10.83	16.17	8.00	10.83	1,405	4.65	35.12
42	Q18017	RADAR SET + PULSE ACQUISITION TRAILER MOUNTED W/E (HAWK).	15.92	8.00	10.00	15.92	8.00	7.67	980	3.87	24.50
43	Q18154	RADAR SET + RANGE ONLY RADAR TRAILER MOUNTED W/E (HAWK).	14.25	7.92	10.00	15.83	7.92	7.67	961	2.80	24.02
44	S69969	SEMITRAILER LOW BED + 6 TON 4 WHEEL W/E (SERGEANT).	31.50	7.33	5.00	31.50	7.33	5.00	1,162	2.36	29.05
45	T01972	SHIELD GUIDED MISSILE LAUNCHER + (NIKE-HERCULES).	9.50	7.83	2.00	9.50	7.83	2.00	154	0.76	3.85
46	T58320	SIMULATOR STATION RADAR SIGNAL GUIDED MISSILE SYSTEM + (N-HERC).	27.58	8.00	10.92	27.58	8.00	10.92	2,416	10.35	60.40
47	W74994	TRACKING STATION GUIDED MISSILE TRAILER MOUNTED + W/E (NIKE-HERC).	28.17	8.00	10.83	21.50	8.00	10.83	1,869	6.63	46.72
48	W75131	TRACKING STATION GUIDED MISSILE TRAILER MOUNTED + W/E (IMP N-HERC).	28.17	8.00	10.75	21.50	8.00	10.75	1,856	6.91	46.40
49	W96496	TRAILER FLAT BED + GUIDED MISSILE W/E (NIKE-AJAX).	32.00	8.00	4.42	32.00	8.00	4.17	1,076	3.36	26.90
50	W97181	TRAILER LOW BED + GUIDED MISSILE 7-TON (NIKE-HERCULES).	45.42	8.58	5.25	45.42	8.58	5.25	2,049	7.27	51.22
51	W98551	TRAILER ROCKET TRANSPORTER + 762MM W/E (HONEST-JOHN).	27.92	8.00	7.08	27.92	8.00	7.08	1,598	3.15	39.95
52	W99099	TRAILER VAN ELECTRONIC SHOP + 4 WHEEL W/E (NIKE-HERCULES).	27.92	8.00	10.67	21.50	8.00	10.67	1,837	9.25	45.92

Table 5-35. Class VII M (Weapons)—Weights and Cubes

1	2	3	4	5	6	7	8	9	10	11
		Operational dimensions			Reduced dimensions					
1 LIN	Item	Length	Width	Height	Length	Width	Height	Reduced cu ft	STON	Reduced MTON
		(Dimensions—ft)								
2 A89819	ARAMENT POD AIRCRAFT 7.62 MILLIMETER MACHINE GUN + W/E.	7.00	1.00	1.17	7.00	1.00	1.17	8	0.10	0.20
3 A90049	ARMAMENT SUBSYSTEM HELICOPTER CALIBER .30 MACHINE GUN + TWIN.	5.17	0.92	0.58	5.17	0.92	0.58	3	0.01	0.07
4 A90460	ARMAMENT SUBSYSTEM HELICOPTER 40 MILLIMETER GRENADE LAUNCHER +.	2.17	1.50	1.67	2.17	1.50	1.67	6	0.07	0.15
5 A93124	ARMORED RECONNAISSANCE AIRBORNE ASSAULT VEHICLE +.	20.67	9.17	9.33	20.67	9.17	8.08	1,547	14.98	38.67
6 E56577	COMBAT ENGINEER VEHICLE FULL TRACKED +.	29.42	12.17	10.83	23.92	12.08	10.58	3,079	54.04	76.97
7 G02478	DETECTING SET MINE TRUCK MOUNTED +.	22.83	5.67	5.92	12.67	5.50	4.58	325	1.62	8.12
8 J96694	GUN ANTIAIRCRAFT ARTILLERY SELF-PROPELLED + 20MM.	9.08	8.75	9.25	9.08	8.75	9.25	735	12.18	18.37
9 J96819	GUN ANTIAIRCRAFT ARTILLERY SELF PROPELLED + 40 MILLIMETER.	20.83	10.50	9.33	20.83	10.50	9.33	2,061	22.15	51.52
10 J96956	GUN ANTITANK SELF PROPELLED + 90MM.	19.17	8.42	6.75	19.17	8.42	6.75	1,089	6.42	27.22
11 J97093	GUN FIELD ARTILLERY SELF-PROPELLED + 155MM.	33.50	11.75	11.67	33.50	11.75	11.67	4,592	48.00	114.80
12 J97230	GUN FIELD ARTILLERY SELF PROPELLED + 175MM.	37.58	10.33	9.00	37.58	10.33	9.00	3,515	28.60	87.87
13 K56981	HOWITZER HEAVY SELF PROPELLED + 8 INCH.	22.00	10.33	9.00	22.00	10.33	9.00	2,059	26.50	51.47
14 K57118	HOWITZER HEAVY TOWED + 8 INCH	36.00	8.42	8.83	32.00	8.42	8.83	2,398	15.85	59.95
15 K57255	HOWITZER LIGHT SELF PROPELLED + 105MM.	20.00	10.67	9.50	20.00	10.67	9.08	1,947	20.04	48.67
16 K57392	HOWITZER LIGHT TOWED + 105 MILLIMETER.	13.58	6.58	4.25	13.58	6.58	4.25	387	1.20	9.67
17 K57529	HOWITZER TOWED + 105 MILLIMETER	19.83	7.17	5.83	19.83	7.17	5.83	835	2.39	20.87
18 K57666	HOWITZER MEDIUM SELF PROPELLED + 155MM.	21.75	10.67	9.50	20.00	10.67	9.08	1,947	22.21	48.67
19 K57803	HOWITZER MEDIUM TOWED + 155 MILLIMETER.	23.58	8.08	7.58	23.58	8.08	7.58	1,465	6.33	36.62
20 K57940	HOWITZER MEDIUM TOWED + 155 MILLIMETER AUXILIARY PROPELLED.	24.33	9.08	6.42	24.33	9.08	6.42	1,448	6.80	36.20
21 K58077	HOWITZER PACK + 75 MILLIMETER	10.58	4.17	3.25	9.42	4.17	3.25	129	0.66	3.22
22 K58214	HOWITZER SALUTING + 75 MILLIMETER	12.92	4.25	4.25	8.00	4.25	2.92	100	0.67	2.50
23 L44164	LAUNCHER GRENADE + AIRCRAFT 40 MILLIMETER.	1.75	0.50	0.75	1.75	0.50	0.75	1	0.01	0.02
24 L44174	LAUNCHER GRENADE + AIRCRAFT 40MM LEFT OR RIGHT HAND FEED.	1.67	0.83	0.58	1.67	0.83	0.58	1	0.03	0.02
25 L45123	LAUNCHER ROCKET + MULTIPLE 115MM	8.58	7.50	6.00	8.33	7.50	5.83	369	0.62	9.22

Table 5-35. Class VII M (Weapons)—Weights and Cubes—Continued

1	1	2	3	4	5	6	7	8	9	10	11
			Operational dimensions			Reduced dimensions					
1	LIN	Item	Length	Width	Height	Length	Width	Height	Reduced cu ft	STON	Reduced MTON
			(Dimensions—ft)								
26	L90605	MACHINE GUN CALIBER .30+ AIRCRAFT LIGHT.	3.33	0.25	0.50	3.33	0.25	0.50	1	0.01	0.02
27	L90742	MACHINE GUN CALIBER .30+ LIGHT FLEXIBLE.	3.17	0.58	0.33	3.75	0.92	0.25	1	0.01	0.02
28	L90879	MACHINE GUN CALIBER .30+ VEHICLE LIGHT.	3.17	0.58	0.25	3.17	0.58	0.25	1	0.01	0.02
29	L91016	MACHINE GUN CALIBER .50+ AIRCRAFT HEAVY FIXED.	4.75	0.50	0.50	4.75	0.50	0.50	1	0.03	0.02
30	L91153	MACHINE GUN CALIBER .50+ HEAVY FIXED FOR CARRIER M59 MORTAR M84.	6.75	0.25	0.50	6.75	0.25	0.50	1	0.06	0.02
31	L91427	MACHINE GUN CALIBER .50+ HEAVY FIXED FOR TANK COMBAT M48 SERIES.	6.75	0.25	0.50	6.75	0.25	0.50	1	0.06	0.02
32	L91701	MACHINE GUN CALIBER .50+ HEAVY FIXED TURRET TYPE.	5.00	0.25	0.50	5.00	0.25	0.50	1	0.06	0.02
33	L92260	MACHINE GUN 7.62 MILLIMETER+ AIRCRAFT LIGHT DOOR MTD.	3.83	0.75	0.58	3.83	0.75	0.58	2	0.02	0.05
34	L92323	MACHINE GUN 7.62 MILLIMETER+ SIX BARRELS.	2.67	0.58	0.58	2.67	0.58	0.58	1	0.02	0.02
35	L92352	MACHINE GUN 7.62 MILLIMETER+ FIXED.	2.83	0.42	0.42	2.83	0.42	0.42	1	0.02	0.02
36	M75166	MOUNT MACHINE GUN+ TRAILER MOUNTED MULTIPLE CALIBER 50.	9.50	5.58	4.83	9.50	5.58	4.83	262	1.13	6.55
37	M75577	MOUNT TRIPOD MACHINE GUN+ HEAVY CALIBER 50.	3.75	0.67	0.33	3.75	0.67	0.33	1	0.01	0.02
38	R50543	RECOVERY VEHICLE FULL TRACKED+ LIGHT ARMORED.	21.08	10.33	9.42	21.58	10.50	9.67	2,195	24.22	54.87
39	R50680	RECOVERY VEHICLE FULL TRACKED+ MEDIUM.	26.75	11.25	10.58	26.75	11.25	9.75	2,939	53.80	73.47
40	R50817	RECOVERY VEHICLE FULL TRACKED+ HEAVY.	33.25	11.92	10.75	33.25	11.92	10.75	4,260	60.00	106.50
41	R95799	RIFLE CALIBER .30+ SNIPERS	3.58	0.25	0.50	3.58	0.25	0.50	1	0.01	0.02
42	R96210	RIFLE RECOILLESS 57 MILLIMETER+	5.08	0.83	0.92	5.08	0.83	0.92	4	0.03	0.10
43	R96484	RIFLE RECOILLESS 90 MILLIMETER+	4.42	1.08	1.25	4.42	1.08	1.25	7	0.01	0.17
44	V12826	TANK COMBAT FULL TRACKED+76MM GUN.	23.00	10.42	10.08	23.00	10.25	8.92	2,132	22.34	53.30
45	V12963	TANK COMBAT FULL TRACKED+90MM GUN.	24.25	11.92	10.25	23.42	11.92	9.75	2,735	49.75	68.37
46	V13100	TANK COMBAT FULL TRACKED+ 105MM GUN.	27.08	12.00	10.67	27.08	12.00	10.33	3,369	48.74	84.22
47	V13237	TANK COMBAT FULL TRACKED+ 120MM GUN.	33.33	11.92	11.75	33.33	11.92	10.67	4,269	58.50	106.72
48	V13269	TANK COMBAT FULL TRACKED+ 152MM GUN.	23.83	11.92	10.83	23.83	11.92	10.83	3,088	54.75	77.20
49	V13374	TANK COMBAT FULL TRACKED+ FLAME THROWER.	22.75	11.92	10.17	22.75	11.92	10.17	2,787	50.00	69.67

Table 5-36. Class VII N (Special Weapons)—Weights and Cubes

1	1	2	3	4	5	6	7	8	9	10	11
			Operational dimensions			Reduced dimensions					
1	LIN	Item	Length	Width	Height	Length	Width	Height	Reduced cu ft	STON	Reduced MTON
			(Dimensions—ft)								
2	E67598	COMPRESSOR RECIPROCATING POWER DRIVEN + 7 CFM.	5.50	2.42	3.00	5.50	2.42	3.00	41	0.62	1.02
3	E74037	COMPRESSOR RECIPROCATING POWER DRIVEN + FLAME THROWER 3-1/2 CFM.	1.83	1.42	1.58	1.83	1.42	1.58	4	0.03	0.10
4	F82154	DECONTAMINATING APPARATUS POWER DRIVEN TRUCK MOUNTED +.	21.75	7.92	8.75	21.75	7.92	7.42	1,280	8.00	32.00
5	G22109	DISPERSER + RIOT CONTROL AGENT HELICOPTER OR VEHICLE MOUNTED.	1.92	1.92	3.83	1.92	1.92	3.83	15	0.08	0.37
6	H48911	FILTER UNIT GAS PARTICULATE + EMD 300 CFM.	2.92	2.08	3.00	2.92	2.08	3.00	19	0.17	0.47
7	H49048	FILTER UNIT GAS PARTICULATE + EMD 5000 CFM.	13.17	4.42	5.00	13.17	4.42	5.00	291	2.10	7.27
8	H49733	FILTER UNIT GAS PARTICULATE + GED 300 CFM.	2.92	2.00	3.08	2.92	2.00	3.08	19	0.14	0.47
9	H50281	FILTER UNIT GAS PARTICULATE + GED 5000 CFM.	13.17	4.42	5.00	13.17	4.42	5.00	291	2.09	7.27
10	J30492	GENERATOR + SMOKE MECHANICAL PULSE JET.	6.00	1.50	1.92	3.50	1.50	1.92	11	0.07	0.27
11	S79045	SERVICE UNIT FLAME THROWER TRUCK MOUNTED +.	22.00	8.00	9.50	22.00	8.00	9.17	1,634	8.70	40.85
12	T84794	SMOKE TANK AIRPLANE +----------	7.08	1.83	1.17	7.08	1.83	1.17	16	0.03	0.40

Table 5-37. Class VII Q (General Equipment)—Weights and Cubes

1	1	2	3	4	5	6	7	8	9	10	11
			Operational dimensions			Reduced dimensions					
1	LIN	Item	Length	Width	Height	Length	Width	Height	Reduced cu ft	STON	Reduce l MTON
			(Dimensions—ft)								
2	B30786	BARGE DECK CARGO + NONPROP HARBORS AND INLAND WATERWAYS.	110.00	32.00	10.83	110.00	32.00	10.83	38,280	134.40	957.00
3	B30923	BARGE DECK CARGO + NONPROP OCEAN TOWING.	120.25	33.50	17.33	120.25	33.50	17.33	70,114	196.00	1,752.85
4	B31060	BARGE DECK CARGO + NONPROP SEC NESTING.	81.00	22.00	7.00	81.00	22.00	7.00	12,474	64.40	311.85
5	B31197	BARGE DECK OR LIQUID CARGO + NONPROP	120.00	19.50	19.00	120.00	19.50	19.00	44,460	175.00	1,111.50
6	B31334	BARGE DECK OR LIQUID CARGO + NONPROP KNOCK DOWN.	45.50	19.00	4.08	45.50	19.00	4.08	3,566	14.56	89.15
7	B31608	BARGE LIQUID CARGO + NONPROPELLED STEEL 8500 BBL 165 FT.	169.00	40.00	21.67	169.00	40.00	21.67	146,467	372.00	3,661.67
8	B83034	BOAT ASSAULT + PLASTIC 16 FT LG	16.42	5.17	2.33	16.42	5.17	2.33	206	0.13	5.15
9	B83445	BOAT BRIDGE ERECTION INBOARD ENGINE + ALUMINUM GAS DRIVEN 19 FT LG	19.17	8.00	5.67	19.17	8.00	5.67	874	1.60	21.85
10	B83993	BOAT PASSENGER AND CARGO +	65.50	17.67	39.00	65.50	17.67	22.00	25,484	72.60	637.10
11	B84130	BOAT PICKET + 36 TO 47 FT	36.50	10.58	17.58	36.50	10.58	9.33	3,605	7.49	90.12
12	B84267	BOAT PICKET + 52 TO 65 FT	64.92	16.50	29.25	64.92	16.50	24.25	26,019	34.72	650.47
13	B84541	BOAT UTILITY +	27.00	8.50	9.33	27.00	8.50	6.25	1,449	3.40	36.22
14	E40960	CLOTHING REPAIR SHOP + TRLR MTD 2 WHL.	13.75	6.92	7.42	13.75	6.92	7.42	712	2.45	17.80
15	H38924	FERRY + HARBOR DOUBLE END DOUBLE DECK.	64.50	24.00	30.08	64.50	24.00	30.08	46,569	147.00	1,164.22
16	J04716	FUEL SYSTEM SUPPLY POINT + PORTABLE 6000 GAL CAP.	3.50	3.25	2.33	3.50	3.25	2.33	27	0.11	0.67
17	L36602	LANDING CRAFT MECHANIZED + 50 TO 56 FT	55.92	14.17	14.33	55.92	14.17	13.33	10,570	28.00	264.25
18	L36739	LANDING CRAFT MECHANIZED + 69 FT	73.67	21.00	19.92	73.67	21.00	14.75	22,873	65.86	571.82
19	L36876	LANDING CRAFT UTILITY + 115 FT	119.00	32.00	50.00	119.00	32.00	21.75	82,824	168.00	2,070.60
20	L58747	LIFEBOAT + STEEL HULL OAR PROPELLED 9 PERSON 14 FT.	14.58	5.33	3.25	14.58	5.33	3.25	259	0.50	6.47
21	L58884	LIFEBOAT + STEEL HULL OAR PROPELLED 31 PERSON 22 FT.	20.83	7.58	4.67	20.83	7.58	4.67	739	1.48	18.47
22	L59021	LIFEBOAT + STEEL HULL OAR PROPELLED 6 PERSON 12 FT.	12.75	4.50	3.17	12.50	4.50	3.00	172	0.43	4.30
23	L67234	LIGHTER AMPHIBIOUS + SELF PROPELLED 5 TON.	35.00	10.00	10.17	35.00	10.00	7.92	2,771	10.48	69.27
24	L67371	LIGHTER AMPHIBIOUS + SELF-PROPELLED 15 TON.	45.00	14.58	15.75	45.00	14.58	13.17	8,672	22.82	216.80
25	L67508	LIGHTER AMPHIBIOUS + SELF-PROPELLED DIESEL STL 60 TON 61 FT.	62.42	26.58	19.33	62.42	26.58	15.92	26,452	98.50	661.30

26	L84872	LUBRICAT-SERV UNIT PWR OPER+ SKID MTD 15 CFM AIR COMP GAS WNTRZD.	8.50	4.08	5.00	8.50	3.83	5.00	164	1.40	4.10
27	L85146	LUBRICAT-SERV UNIT PWR OPER+ TRLR MTD 12 CFM AIR COMP GAS DRVN.	13.83	6.92	8.17	13.83	6.92	7.58	731	2.78	18.27
28	L85283	LUBRICAT-SERV UNIT PWR OPER+ TRLR MTD 15 CFM AIR COMP GAS DRVN.	14.58	7.92	6.58	14.58	7.92	6.58	770	2.67	19.25
29	L85420	LUBRICAT-SERV UNIT PWR OPER+ TRLR MTD 15 CF AIR COMP GAS DRVN WZD.	14.50	8.08	6.67	14.50	8.08	6.67	787	2.66	19.67
30	L85557	LUBRICAT-SERV UNIT PWR OPER+ TRLR MTD 16 CFM GAS DRVN.	13.75	6.83	8.17	13.75	6.83	7.00	667	2.13	16.67
31	L86673	LUBRICATING UNIT POWER OPERATED+ 25-50 LB TNK CAP AIR 100 PSI.	1.33	1.33	2.83	1.33	1.33	2.83	6	0.02	0.15
32	P97188	PUMPING UNIT CENTRIFUGAL FUELING DEFUELING+ ELEC 50 GPM CAP.	6.00	4.00	6.00	6.00	4.00	6.00	144	0.30	3.60
33	V19950	TANK UNIT LIQUID DISPENSING TRAILER MOUNTING+.	5.08	6.00	4.67	5.08	6.00	4.67	143	0.20	3.57

Table 5-38. Class II E (General Supply Items)—Weights and Cubes

1	1	2	3	4	5	6	7	8	9	10	11
			Operational dimensions			Reduced dimensions					
1	LIN	Item	Length	Width	Height	Length	Width	Height	Reduced cu ft	STON	Reduced MTON
			(Dimensions—ft)								
2	B73697	BLASTING MACHINE+ PLUNGER OPERATED WOOD CASE 50 CAP CAPACITY.	0.67	0.50	1.25	0.67	0.50	1.25	1	0.01	0.02
3	E10835	CHEST HYMNBOOK+ W/HANDLES	3.00	1.33	1.50	3.00	1.33	1.50	6	0.02	0.15
4	E52416	COLLECTIVE PROTECTION EQUIPMENT VAN+ M1.	2.25	1.50	1.42	2.25	1.50	1.42	5	0.03	0.12
5	H48637	FILTER PARTICULATE+ FIRE RESISTANT 1000/1250 CFM.	2.17	1.00	2.08	2.17	1.00	2.08	5	0.01	0.12
6	K71776	INDICATOR+ EYEPIECE LEAKAGE	2.83	2.25	1.75	2.83	2.25	1.75	11	0.08	0.27
7	L96030	MAINTENANCE REPAIR KIT CBR EQUIPMENT+ M14.	2.92	2.00	1.42	2.92	2.00	1.42	9	0.05	0.22
8	Q93303	RADIOACTIVE SOURCE SET+	1.75	1.50	7.00	1.75	1.50	7.00	18	0.08	0.45
9	W03346	TESTER LEAKAGE PROTECTIVE MASK+ DOP.	4.58	2.17	4.33	4.58	2.17	4.33	46	0.25	1.15
10	W14585	THREADING SET PIPE EXTERNAL+ 1-11-1/2NPT TO 2-11-1/2NPT.	2.00	0.58	0.50	2.00	0.58	0.50	1	0.01	0.02
11	W48485	TOOL KIT PIPE CUTTING GROOVING AND BEVELING+ 4 6 AND 8 IN PIPE.	9.50	4.00	5.00	9.50	4.00	3.67	139	1.82	3.47

5-22. Class IV Supply

Table 5-39 provides weights and cubes for construction and fortification materials.

5-23. Class VIII Supply

Table 5-40 provides weights and cubes for Army Medical Department unit assemblages. Table 5-41 provides weights and cubes for class VIII items.

5-24. Notes on Other Classes

Most TOE items are in either class VII, class II, or class VIII. Dimensional or other characteristics data for classes VI, IX, and X will be included here when available.

Table 5-39. Construction and Fortification Materials—Weights and Cubes

1	1 Item	2 MTON	3 STON
2	Brick, masonry, pressed	1.00	2.80
3	Brick, masonry, common	1.00	2.40
4	Brick, masonry, soft	1.00	2.00
5	Cement, portland, loose	1.00	1.80
6	Cement, portland, set	1.00	3.70
7	Concrete, masonry	1.00	2.40
8	Dynamite, military (50 lb per box)	1.00	1.00
9	Earth, dry, loose	1.00	1.50
10	Earth, dry, packed	1.00	1.90
11	Gravel, loose	1.00	2.10
12	Rock, crushed	1.00	2.00
13	Rubble, dry, masonry	1.00	2.60
14	Sand, dry	1.00	1.80
15	Sand, gravel	1.00	2.00
16	Tar, bituminous	1.00	1.50
17	White pine	1.00	0.60
18	Detonating cord, 3,000 ft per box (100 boxes)	6.30	3.80
19	Time fuze, blasting (100 boxes)	9.80	4.70
20	Railroad track, 98 lb per m, rail per km of single track	29.76	98.27
21	Railroad track, rail turnout, complete, 98 lb per m (each)	4.15	5.95
22	Pipe, 4-in. lt, with couplings (100 20-ft sec)	6.50	4.50
23	Pipe, 4-in. std, with couplings (100 20-ft sec)	6.50	10.40
24	Pipe, 6-in. lt, couplings (100 20-ft sec)	14.10	9.20
25	Pipe, 6-in. std, with couplings (100 20-ft sec)	14.10	15.70
26	Pipe, 8-in. lt, with couplings (100 20-ft sec)	24.40	11.70
27	Pipe, 8-in. std, with couplings (100 20-ft sec)	24.40	23.50
28	Pipe, 12-in. lt, with couplings (100 20-ft sec)	52 40	21.80
29	Pipe, 12-in. std, with couplings (100 20-ft sec)	52.40	43.20
30	Pipe, 16-in. std, welded (100 20-ft sec)	82.30	52.40
31	Tank, steel-bolted, 1,000-bbl	11.50	10.75
32	Tank, steel-bolted, 3,000-bbl	30.00	17.00
33	Tank, steel-bolted, 10,000-bbl	70.30	44.10
34	Tank, collapsible, 238-bbl, with hose manifold	2.10	0.70

Table 5-40. Army Medical Department Unit Assemblages

1	1	2	3	4	5	6	7	8	9	10	11	12	13	14	15	16	17	18	19	20
			Med equip set(s)						Other commodity comd						Total unit TOE assemblage					
1	LIN	Major med equip set	Number of lines	Number of packages	STON	Cubage	Carloads	Sq ft of stor space	Number of lines	Number of packages	STON	Cubage	Carloads	Sq ft of stor space	Total number of lines	Total number of packages	Total STON	Total cubage	Total carloads	Total sq ft of stor space
2	M22738	Conv cen, army, 1,500-pnt	970	814	30.7	4,636	2	450	495	4,400	260.0	31,400	13	4,000	1,140	3,520	292.1	35,863	15	4,450
3	M22875	Conv cen, army, expansion, 1,500-pnt	507	481	19.3	3,290	1	265	170	2,706	138.2	12,612	6	1,500	1,002	4,881	159.6	15,216	7	1,765
4	M23012	Med lab, army, ptbl	3,132	852	18.1	2,450	1	365												
5	M23149	Med lab, army, smbl	1,848	249	2.8	10	1	144												
6	M24519	Disp, COMMZ	388	65	2.21	310	LCL	35												
7	M25067	Evac hosp, 400-bed, smbl	2,631	975	31.75	3,896	13	665	249	1,052	72.2	8,221	3	1,040	2,880	2,027	114.0	14,823	16	1,705
8	M25204	Fld hosp, hospitalization unit, mbl	902	472	15.6	2,100	1	253												
9	M25752	Gen disp, COMMZ, type 1	656	98	1.69	148	LCL	56	233	51	2.0	218	LCL	27	889	149	6.6	783	LCL	83
10	M25889	Gen disp, COMMZ, type 2	596	170	3.23	289	LCL	85	64	45	2.0	90	LCL	11	680	215	8.6	942	LCL	96
11	M26163	GH, 1,000-bed, COMMZ	2,887	3,709	108.7		15	3,440	335	2,105	125.0	13,638	6	1,800	3,222	5,814	358.9	47,761	21	5,240
12	M26300	Sta hosp, 100-bed	1,882	478	25.85	3,620	2	450	388	397	22.8	3,023	1	320	2,220	875	55.0	7,440	3	770
13		Sta hosp, 200-bed	1,950	790	39.85	5,760	3	760	235	810	25.9	3,328	1	400	2,185	1,600	72.5	9,729	4	1,160
14	M26437	Sta hosp, 250-bed			42.5	6,930														
15	M26505	Sta hosp, 300-bed	2,608	1,130	53.15	7,047	4	860	290	387	45.9	6,502	2	3,036	2,898	1,517	106.0	15,016	6	3,896
16	M26574	Sta hosp, 500-bed	2,550	1,735	63.1		6	1,260	483	1,282	99.6	12,185	6	1,660	3,033	3,017	182.1	24,653	12	2,920
17	M26711	Sta hosp, 750-bed	2,778	2,271	81.7		9	2,350	512	1,852	110.6	12,803	6	1,750	3,290	4,123	238.2	36,055	15	4,100
18	M27533	Hosp expansion, 20-bed			3.45	50														
19	M27670	Hosp expansion, 25-bed	399		3.73	543	LCL	60												
20	M27807	Hosp expansion, 50-bed	408	171	6.4	984	LCL	112												
21	M28081	Hosp expansion, 100-bed	463	279	14.0	2,140	1	300												
22	M29177	MASH, 60-bed	1,167	406	17.55	2,556	1	185	165	514	26.3	2,985	1	300	1,332	920	42.3	5,343	2	485

Table 5-41. Class VIII (Medical Materiel)—Weights and Cubes

1	1	2	3	4	5	6	7	8	9	10	11
			Operational dimensions			Reduced dimensions					
1	LIN	Item	Length	Width	Height	Length	Width	Height	Reduced cu ft	STON	Reduced MTON
			(Dimensions—ft)								
2	B17736	BAKER PHYSICAL THERAPY + 110 VOLT AC DC.	2.33	1.75	0.83	2.33	1.75	0.83	4	0.01	0.10
3	B54834	BED BOARD SLATTED HOSPITAL BED+	2.92	0.58	0.33	2.92	0.58	0.33	1	0.01	0.02
4	B56471	BEDSPRING+ ADJUSTABLE GATCH TYPE 36 BY 76 INCHES.	6.33	3.17	0.33	6.33	3.17	0.33	8	0.03	0.20
5	C44244	CABINET BEDSIDE+ METAL GREEN	1.67	1.33	2.92	1.67	1.33	2.92	7	0.03	0.17
6	C49450	CABINET MEDICINE COMBINATION+ CRS WITH NARCOTIC LOCKER.	1.42	3.00	6.50	1.42	3.00	6.50	30	0.14	0.75
7	C52190	CABINET SURGICAL INSTRUMENT + CRS 16 BY 36 BY 72 INCHES.	1.42	3.00	6.00	1.42	3.00	6.00	26	0.20	0.65
8	D13408	CART CLINICAL CHART HOLDER+ CAPACITY 30 CHART HOLDERS.	2.67	2.08	2.92	2.67	2.08	2.92	17	0.07	0.42
9	D13418	CART CLINICAL CHART HOLDER+ CAPACITY 45 CHART HOLDERS.	3.67	2.08	3.67	3.67	2.08	3.67	30	0.12	0.75
10	D14093	CART SURGICAL DRESSING+ CORROSION RESISTING METAL.	4.58	1.92	3.08	4.58	1.92	3.08	28	0.10	0.70
11	D84106	CHAIR EXAMINING AND TREAMENT SURGICAL+ MOTOR DRIVEN.	3.00	2.33	3.33	3.00	2.33	3.33	24	0.23	0.60
12	E11794	CHEST MEDICAL INSTRUMENT AND SUPPLY SET+ FLD NO 4 EM 30×18×12 IN.	2.58	1.58	1.17	2.58	1.58	1.17	5	0.01	0.12
13	F94819	DENTAL EQUIPMENT SET CENTRAL DENTAL LABORATORY+ COMM-Z.	1.75	1.67	2.75	1.75	1.67	2.75	8	0.12	0.20
14	F95230	DENTAL EQUIPMENT SET OPERATING FIELD+.	2.50	1.50	1.67	2.50	1.50	1.67	6	0.07	0.15
15	F95778	DENTAL SUPPLY SET EMERGENCY DENTURE REPAIR+.	2.00	1.00	0.50	2.00	1.00	0.50	1	0.02	0.02
16	F98774	DESK FLAT TOP+ NURSES SINGLE PEDESTAL CORROSION-RESISTING-METAL.	3.00	2.08	2.75	3.00	2.08	2.75	18	0.10	0.45
17	G08033	DIATHERMY APPARATUS+ SHORT WAVE SGL FR 13.56 MCS 110 V 60 CY AC.	2.08	1.67	4.25	2.08	1.67	4.25	15	0.11	0.37
18	K25068	HEATER HEAT TREATMENT PAD+ FOUR PAD 110 VOLT 60 CYCLE AC.	0.92	0.75	1.25	0.92	0.75	1.25	1	0.01	0.02
19	L65364	LIGHT SURGICAL STAND+ MOBILE EXPLOSIVE PROOF 110 VOLT AC-DC.	2.00	3.92	6.25	2.00	3.92	6.25	50	0.12	1.25
20	L74118	LITTER FOLDING POLE+ ALUMINUM POLE.	7.50	2.00	0.25	3.75	0.58	0.58	1	0.01	0.02
21	L74392	LITTER RIGID MOUNTAIN+ BASKET TYPE.	7.50	0.58	0.33	7.50	0.58	0.33	2	0.01	0.05
22	L74529	LITTER RIGID STOKES+	7.00	1.92	0.58	7.00	0.33	0.58	1	0.02	0.02
23	Q08407	RACK DRYING BEDPAN AND URINAL+W/ REMOVABLE DRIP PAN CRS.	2.17	0.50	3.42	2.17	0.50	3.42	4	0.01	0.10
24	Q08475	RACK DRYING GLOVE+ CORROSION-RESISTING-STEEL.	1.50	2.00	6.00	1.50	2.00	6.00	18	0.08	0.45

25	S33234	SANITIZER HOSP UTENSIL+ BOILING TY STM HTD CRM 24×20×20 INCHES.	2.33	2.42	3.92	2.33	2.42	3.92	23	0.10	0.57
26	S95676	SHELF INSERT STERILIZER+	2.75	1.33	0.75	2.75	1.33	0.75	3	0.01	0.07
27	U23591	STAND BASIN+ DOUBLE CORROSION-RESISTING STEEL.	2.08	1.17	2.50	2.08	1.17	2.50	7	0.02	0.17
28	U23865	STAND BASIN+ SINGLE CORROSION-RESISTING STEEL.	1.25	1.17	2.58	1.25	1.17	2.58	4	0.02	0.10
29	U24961	STAND IRRIGATOR+ CORROSION-RESISTING-STEEL.	1.58	1.58	6.08	1.58	1.58	6.08	16	0.04	0.40
30	U27153	STAND SHELF+ CORROSION-RESISTING-STEEL.	3.08	1.33	5.17	3.08	1.33	5.17	22	0.07	0.55
31	U27290	STAND SURGICAL INSTRUMENT+ ADJUSTABLE CORROSION-RESISTING-STEEL.	1.83	1.50	3.33	1.83	1.50	3.33	10	0.03	0.25
32	U27427	STAND SURGICAL INSTRUMENT+ ADJUSTABLE OLIVE DRAB ENAMELED.	2.00	1.83	2.58	2.00	1.83	2.58	10	0.01	0.25
33	U38948	STERILIZER SURGICAL INST-DRES+ PRES ELEC-FUEL HEAT CRS AUTO.	1.92	1.25	1.50	1.92	1.25	1.50	4	0.04	0.10
34	U39016	STERILIZER SURG INSTR DRESS+ PRES EXTR HTDCRS 12-1/2 BY 12-1/2 IN.	1.00	1.00	1.67	1.00	1.00	1.67	2	0.01	0.05
35	U65617	SURGICAL INSTRUMENT AND SUPPLY SET SHOCK TREATMENT FIELD+.	1.75	1.50	2.83	1.75	1.50	2.83	8	0.08	0.20
36	U91559	TABLE ANESTHESISTS+ CRS 22×13-1/2×32 INCHES.	1.75	1.08	2.50	1.75	1.08	2.50	5	0.03	0.12
37	U93066	TABLE EXAMINING AND TREATMENT+ CABINET TYPE STEEL ENAMELED.	4.75	1.92	2.83	4.75	1.92	2.83	27	0.13	0.67
38	V01287	TABLE PATIENT EXAMINING+ CORROSION-RESISTING-STEEL.	4.50	1.67	2.42	4.50	1.67	2.42	19	0.08	0.47
39	V01972	TABLE SURGICAL INST AND SURGICAL DRESS+ CRS 20×16×34 1/2 INCHES.	1.75	1.42	2.92	1.75	1.42	2.92	7	0.04	0.17
40	V02109	TABLE SURGICAL INST AND SURGICAL DRESS+ CRS 33×18×32 INCHES.	2.83	1.58	2.58	2.83	1.58	2.58	13	0.02	0.32
41	V02383	TABLE SURGICAL INST-DRES+ CRS 48×24 40-1/2 INCHES.	4.08	2.08	3.33	4.08	2.08	3.33	29	0.12	0.72
42	X95853	VAPORIZER MEDICINAL+ 110 VOLT AC-DC.	1.67	0.75	1.83	1.67	0.75	1.83	3	0.01	0.07

Section VI. CONSUMPTION RATES

5-25. General

This section provides consumption and flow charts dealing with resupply factors derived from World War II experience. As more current factors become available, they will replace the factors applicable to similar situations (intensity, terrain).

5-26. Consumption Flow Charts

a. This paragraph illustrates (fig 5-1 through 5-11) the flow of replacement and consumption supplies from the CONUS or local theater procurement agencies to a large landmass theater of operations. It should be noted that the basic figures are derived from World War II experience, modified as indicated.

b. The unit of measure, STON per division slice, is considered the most appropriate for long-range planning for resupply of the Army and the U.S. Air Force (USAF) in a theater of operations. The division slice is defined (para 2-7*b*(1)) as including the strength of an average division plus proportionate share of the total corps, field army zone, and theater overhead units. A troop location ratio has been assumed and is illustrated by the human silhouettes in figure 5-1. Each silhouette represents approximately 10,000 of the 51,955 men making up the theater division slice. For illustrative purposes in the figures below, all divisions in the theater presumably are occupying sectors along the front. In practice, varying proportions of these troops will be in reserve, in rest areas, in transit, or in staging. Also shown similarly is the proportionate air strength in the theater, based on a ratio of two air wing slices (defined in para 2-7*b*(2)) per division slice.

c. The figures include, besides the supplies consumed by the Army in the theater, the quantities of supplies brought into the theater for USAF use. All are shown in terms of STON per division slice per day. In all instances, figures based on USAF strength include those Army troops, part of the air wing slice, required in the theater because of the presence of USAF elements, which are provided Army combat service support. A horizontal dotted line (fig 5-1) separates the quantity of supplies brought into the theater for the Army from those supplies brought in for the USAF.

d. The flow of supplies, in terms of STON per division slice per day, shown in each of the figures is supported by rounds-per-man-per-day data indicated beneath each figure.

e. Procurement in the theater is indicated in each chart, except for classes V W and V A, as possible source of supply. The quantity thus available would decrease proportionally the amount to be procured from the CONUS.

f. Buildup of theater levels is not included in this series of figures. However, this buildup can be determined by a fractional increase in the amounts shown. For example, to establish a theater reserve of 30 days of supply and to accomplish this buildup in 120 days, a fractional increase of 30/120, or one-fourth, can be made in the amounts shown here.

g. Figure 5-1 through 5-11, which are for planning purposes only, were updated from World War II experience to reflect the 10 classes of supply. Study data were used in the updating because actual data have not been developed. Appendix B contains actual World War II data.

5-27. Consumption Rates

a. Table 5-42 provides comparative consumption rates for the 10 classes of supply.

(1) Column 2 represents the United States Army, Europe (USAREUR), rates approved by the Joint Chiefs of Staff for planning purposes.

(2) Column 3 represents figure 5-2.

b. Table 5-43 shows sample computations involving application of table 5-42, column 2, for an airlift of the aviation battalion, infantry division (TOE 1-75G), under the following conditions:

(1) Personnel are weighted at 240 pounds, an average that includes individual equipment and clothing. TOE strength is 367.

(2) TOE equipment comprises the weights and cubages listed herein. Vehicle fuel tanks and containers will be three-fourths full.

(3) Accompanying supplies—classes I, III, and V. Class II, IV, VI, VII, VIII, IX, and X supplies are limited to critical items based on a 15-day requirement, whereas the major classes differ as follows:

(*a*) Class I supply is based on 5 days to accompany each unit.

(*b*) Class III supply is based on the weight of POL required to operate ground and air vehicles a minimum of 5 days. Class III require-

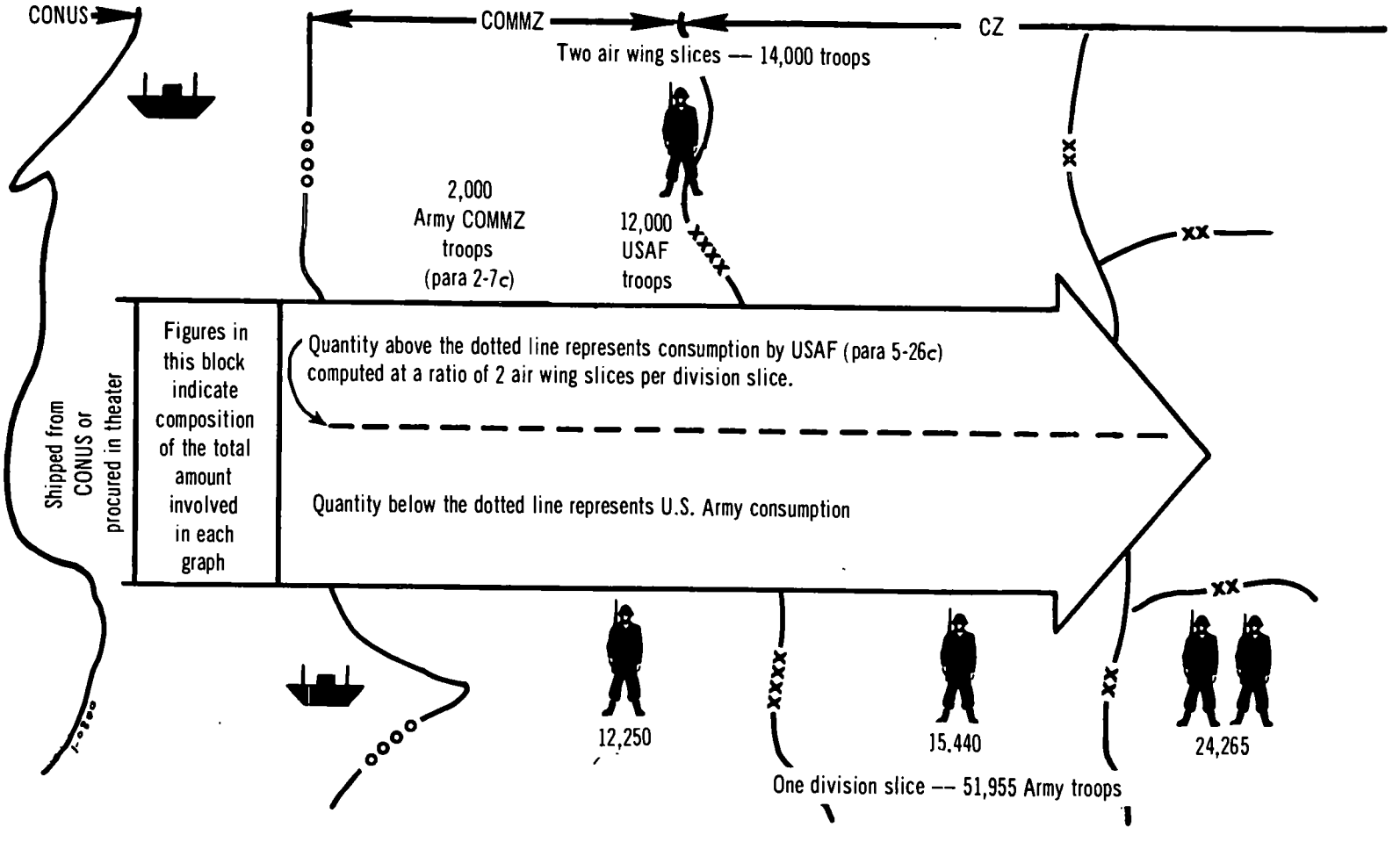

Figure 5–1. Consumption flow chart—personnel.

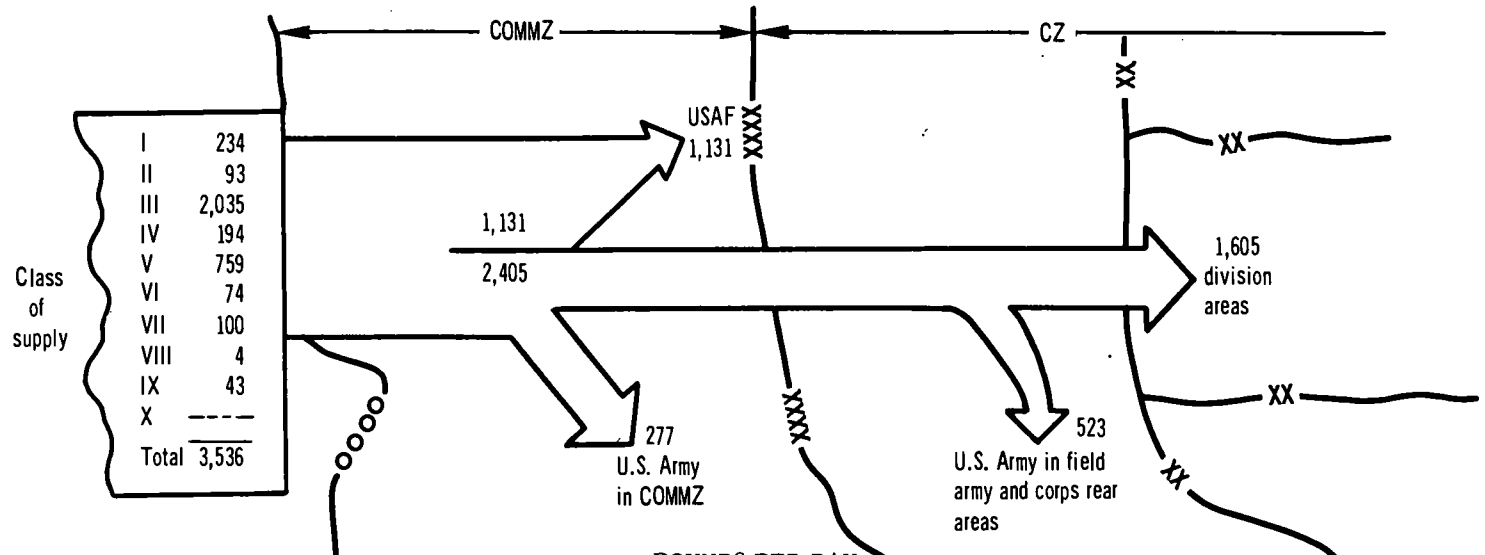

POUNDS PER DAY

Class of supply	Consumed per man in theater, Army plus USAF	Consumed by Army in theater per Army man in theater	Consumed by USAF in theater per USAF man in theater[a]	Consumed by Army in COMMZ per Army man in COMMZ	Consumed by Army in combat zone per Army man in combat zone	Consumed by Army in field army and corps rear areas per Army man in such areas	Consumed by Army in division areas per Army man in such areas
I	7.20	7.31	6.70	8.80[b]	6.70	6.70	6.70
II	2.82	3.26	0.83	3.35	3.23	3.21	3.25
III	61.70	47.80	125.00	32.40	53.10	38.20	62.60
IV	5.88	6.80	1.73	7.00	6.75	6.70	6.77
V	23.00	23.40	25.40	2.40	29.70	5.20	45.30
VI	2.23	2.59	0.66	2.65	2.57	2.55	2.58
VII	3.04	3.51	0.89	3.60	3.47	3.45	3.50
VIII	0.12	0.14	0.04	0.14	0.14	0.14	0.14
IX	1.31	1.52	0.39	1.56	1.51	1.50	1.52
X	-----	-----	-----	-----	-----	----	----
Total	107.30	96.33	161.64	61.90	107.17	67.65	132.36

[a]Includes Army troops required in the theater because of the presence of USAF elements.

[b]This figure is greater than class I figures in other columns because of inclusion of expenditures for civilians, prisoners of war, and allies and miscellaneous theater-wide losses.

Figure 5-2. Short tons per division slice per day—all classes.

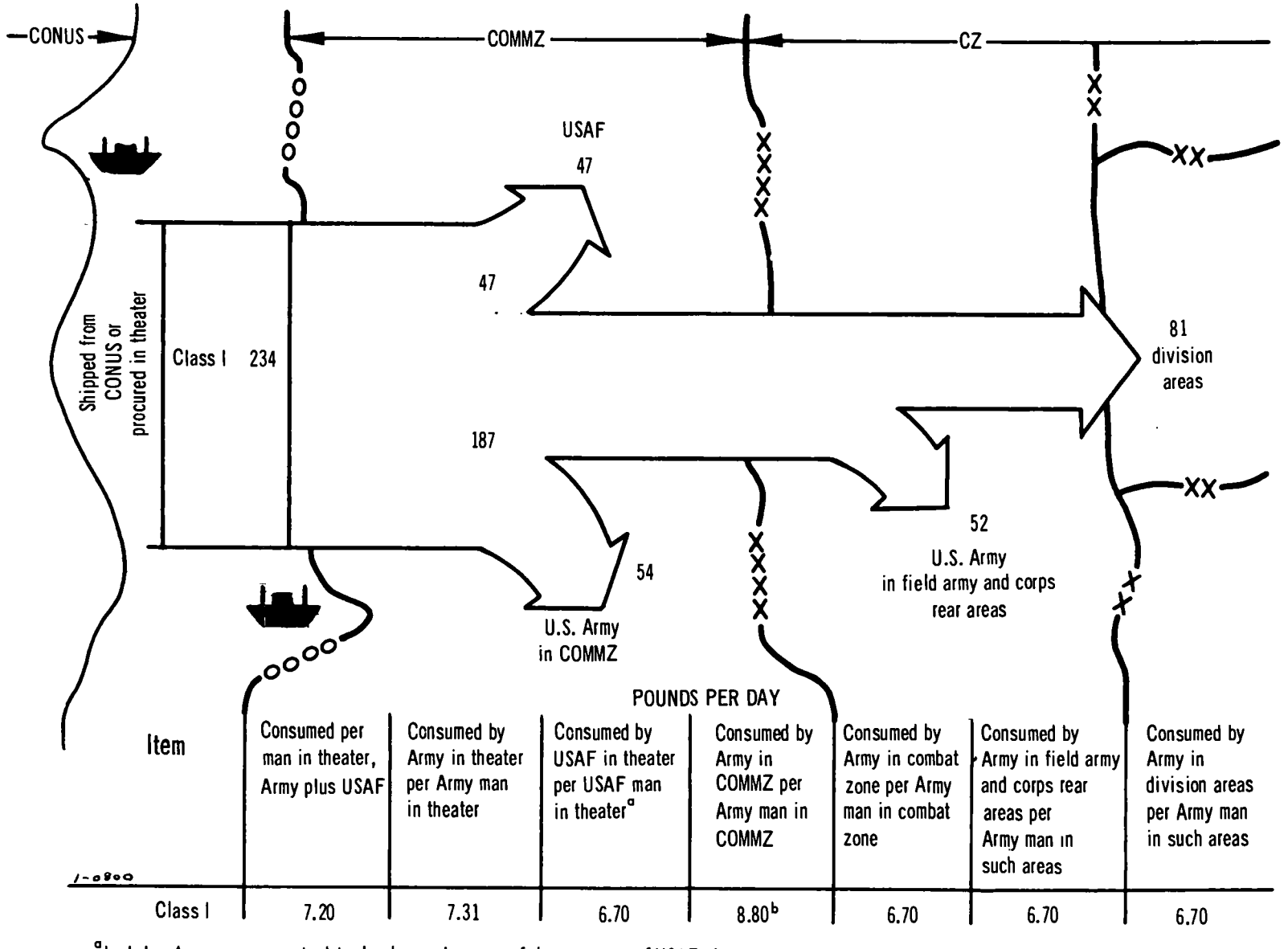

[a] Includes Army troops required in the theater because of the presence of USAF elements.

[b] This figure is greater than class I figures in other columns because of inclusion of expenditures for civilians, prisoners of war, and allies and miscellaneous theater-wide losses.

Figure 5–3. Short tons per division slice per day—class I.

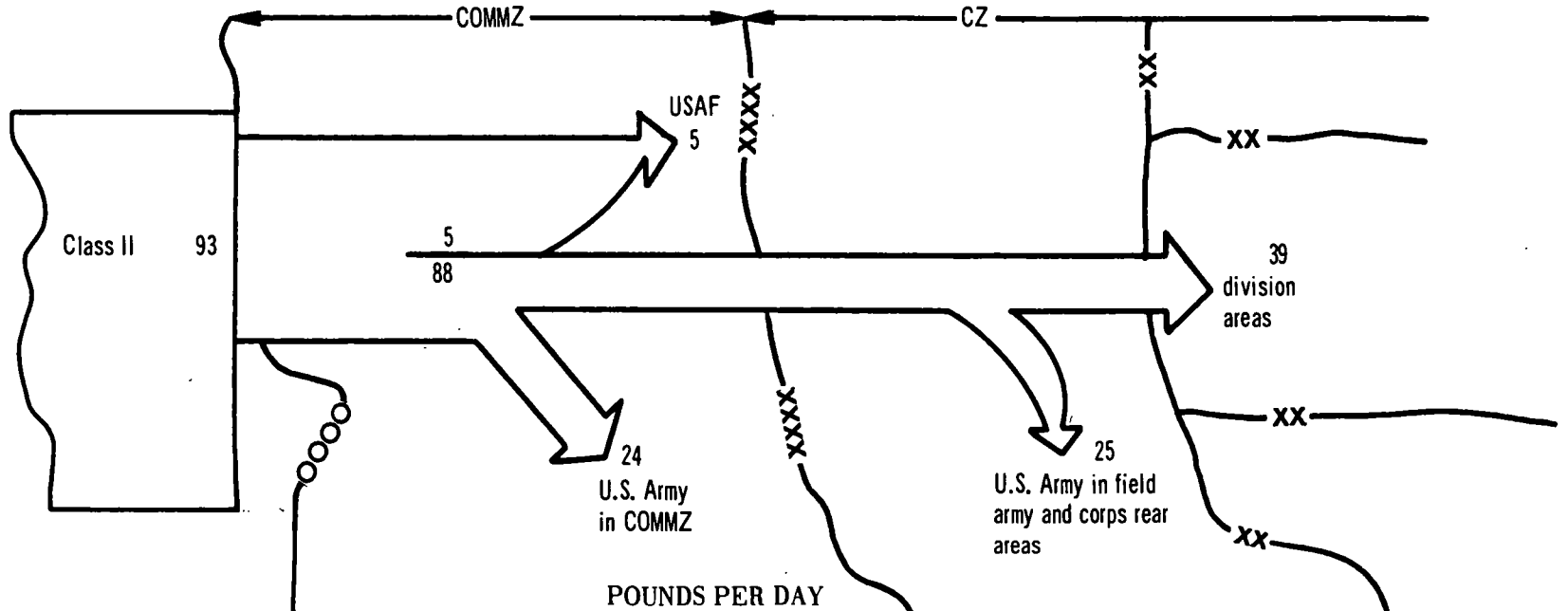

POUNDS PER DAY

Item	Consumed per man in theater, Army plus USAF	Consumed by Army in theater per Army man in theater	Consumed by USAF in theater per USAF man in theater*	Consumed by Army in COMMZ per Army man in COMMZ	Consumed by Army in combat zone per Army man in combat zone	Consumed by Army in field army and corps rear areas per Army man in such areas	Consumed by Army in division areas per Army man in such areas
Class II	2.82	3.26	0.83	3.35	3.23	3.21	3.25

*Includes Army troops required in the theater because of the presence of USAF elements.

Figure 5-4. Short tons per division slice per day—class II.

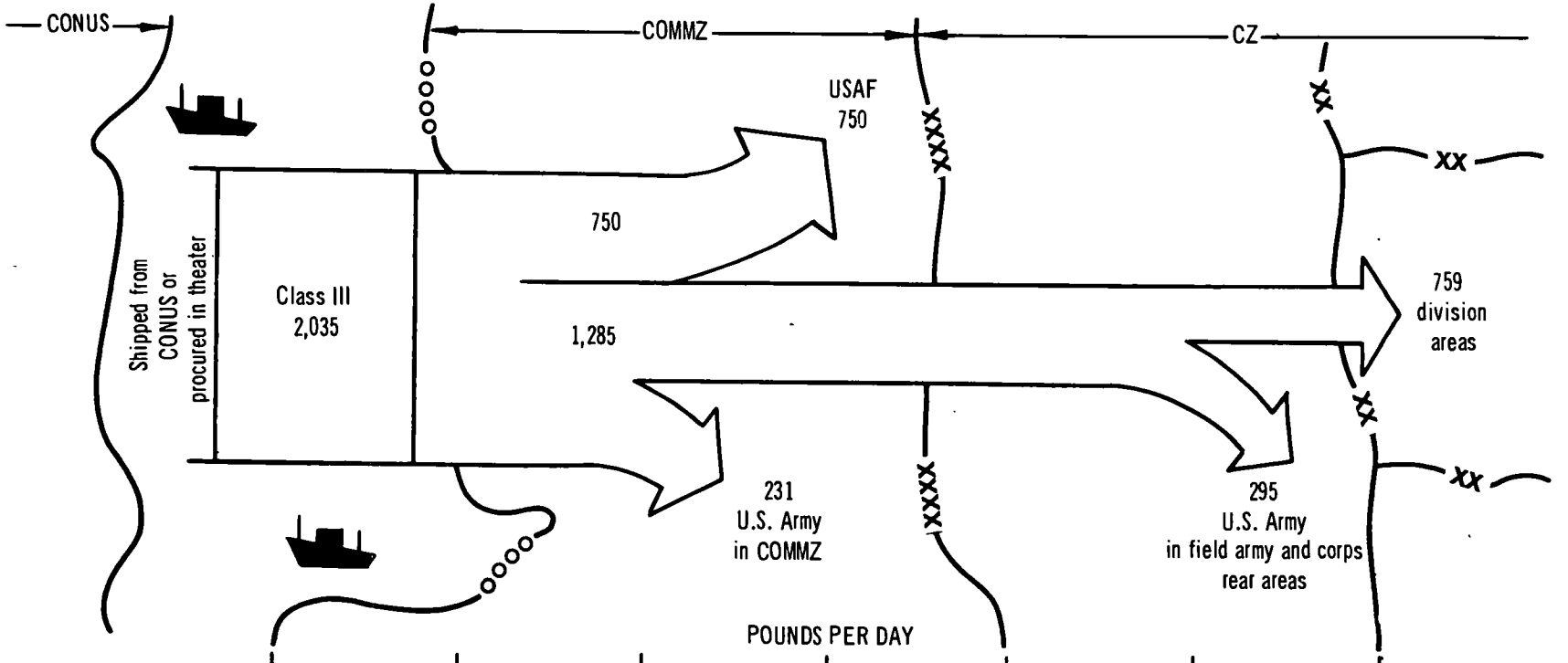

POUNDS PER DAY

Item	Consumed per man in theater, Army plus USAF	Consumed by Army in theater per Army man in theater	Consumed by USAF in theater per USAF man in theater*	Consumed by Army in COMMZ per Army man in COMMZ	Consumed by Army in combat zone per Army man in combat zone	Consumed by Army in field army and corps rear areas per Army man in such areas	Consumed by Army in division areas per Army man in such areas
Class III	61.7	47.8	125.0	32.4	53.1	38.2	62.6

*Includes Army troops required in the theater because of the presence of USAF elements.

Figure 5–5. Short tons per division slice per day—class III.

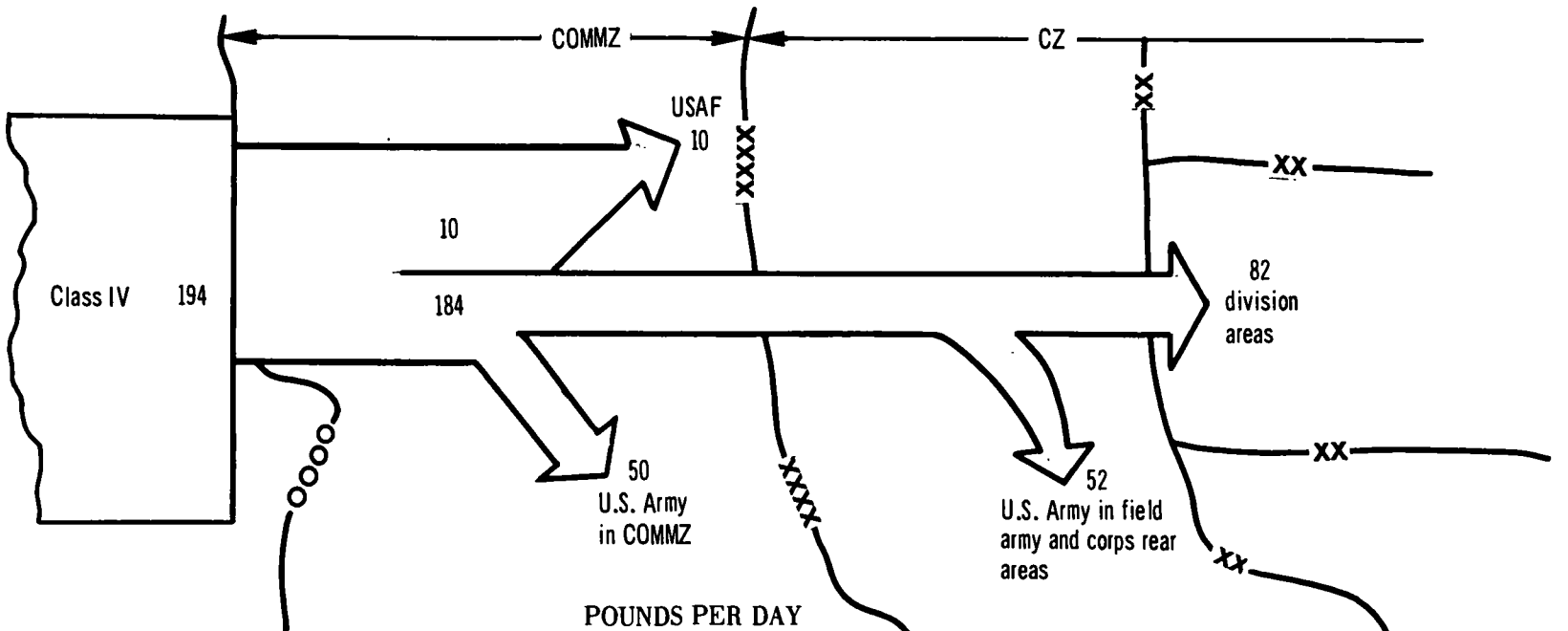

POUNDS PER DAY

Item	Consumed per man in theater Army plus USAF	Consumed by Army in theater per Army man in theater	Consumed by USAF in theater per USAF man in theater*	Consumed by Army in COMMZ per Army man in COMMZ	Consumed by Army in combat zone per Army man in combat zone	Consumed by Army in field army and corps rear areas per Army man in such areas	Consumed by Army in division areas per Army man in such areas
Class IV	5.88	6.80	1.73	7.00	6.75	6.70	6.77

1-0800

*Includes Army troops required in the theater because of the presence of USAF elements.

Figure 5-6. Short tons per division slice per day—class IV.

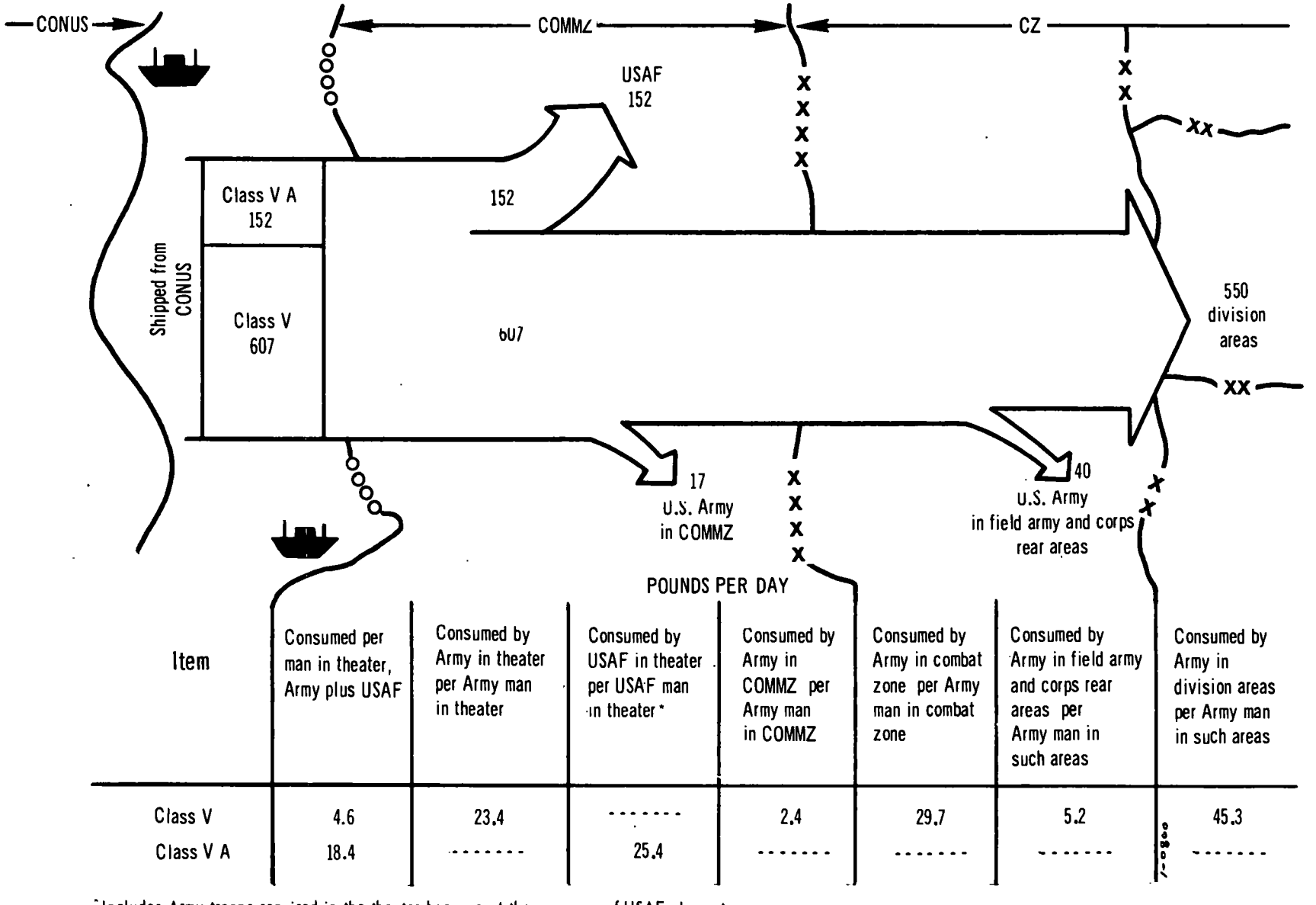

Item	Consumed per man in theater, Army plus USAF	Consumed by Army in theater per Army man in theater	Consumed by USAF in theater per USAF man in theater*	Consumed by Army in COMMZ per Army man in COMMZ	Consumed by Army in combat zone per Army man in combat zone	Consumed by Army in field army and corps rear areas per Army man in such areas	Consumed by Army in division areas per Army man in such areas
Class V	4.6	23.4	-------	2.4	29.7	5.2	45.3
Class V A	18.4	-------	25.4	-------	-------	-------	-------

*Includes Army troops required in the theater because of the presence of USAF elements.

Figure 5–7. Short tons per division slice per day—classes V and V A.

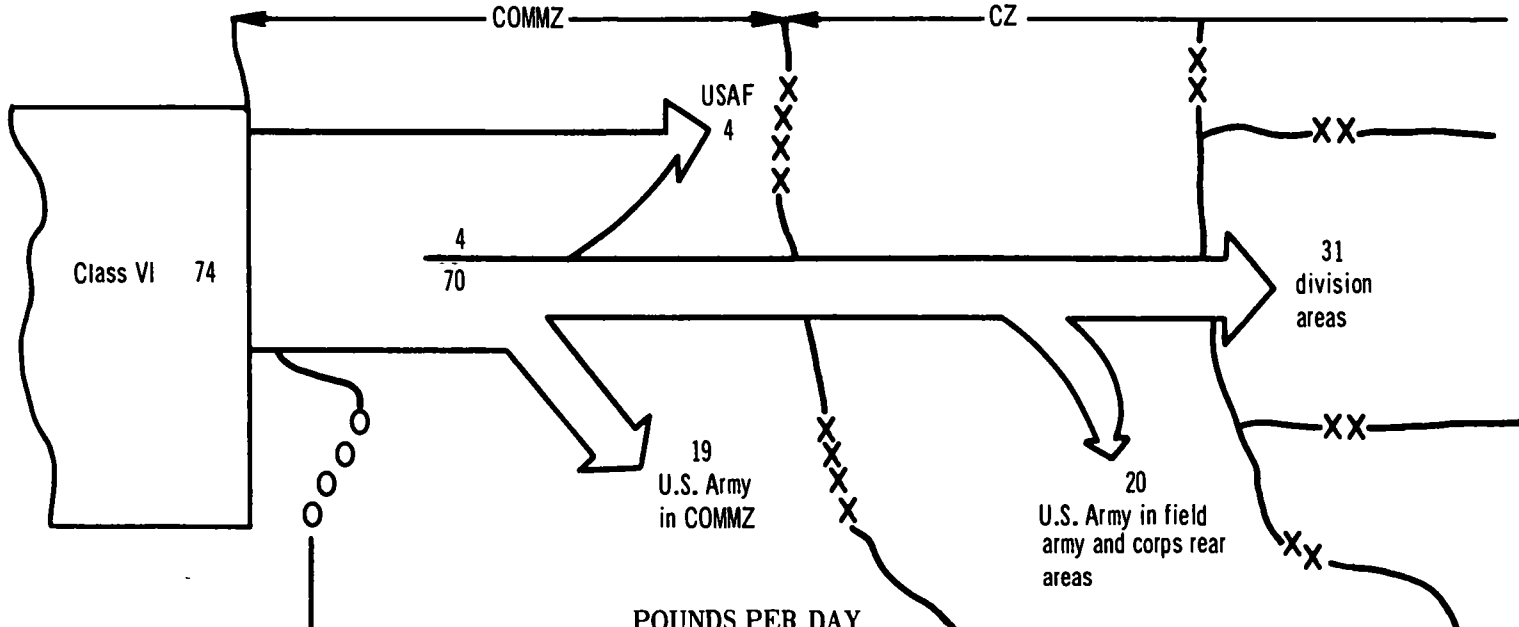

POUNDS PER DAY

Item	Consumed per man in theater, Army plus USAF	Consumed by Army in theater per Army man in theater	Consumed by USAF in theater per USAF man in theater*	Consumed by Army in COMMZ per Army man in COMMZ	Consumed by Army in combat zone per Army man in combat zone	Consumed by Army in field army and corps rear areas per Army man in such areas	Consumed by Army in division areas per Army man in such areas
Class VI	2.23	2.59	0.66	2.65	2.57	2.55	2.58

*Includes Army troops required in the theater because of the presence of USAF elements.

Figure 5–8. Short tons per division slice per day—class VI.

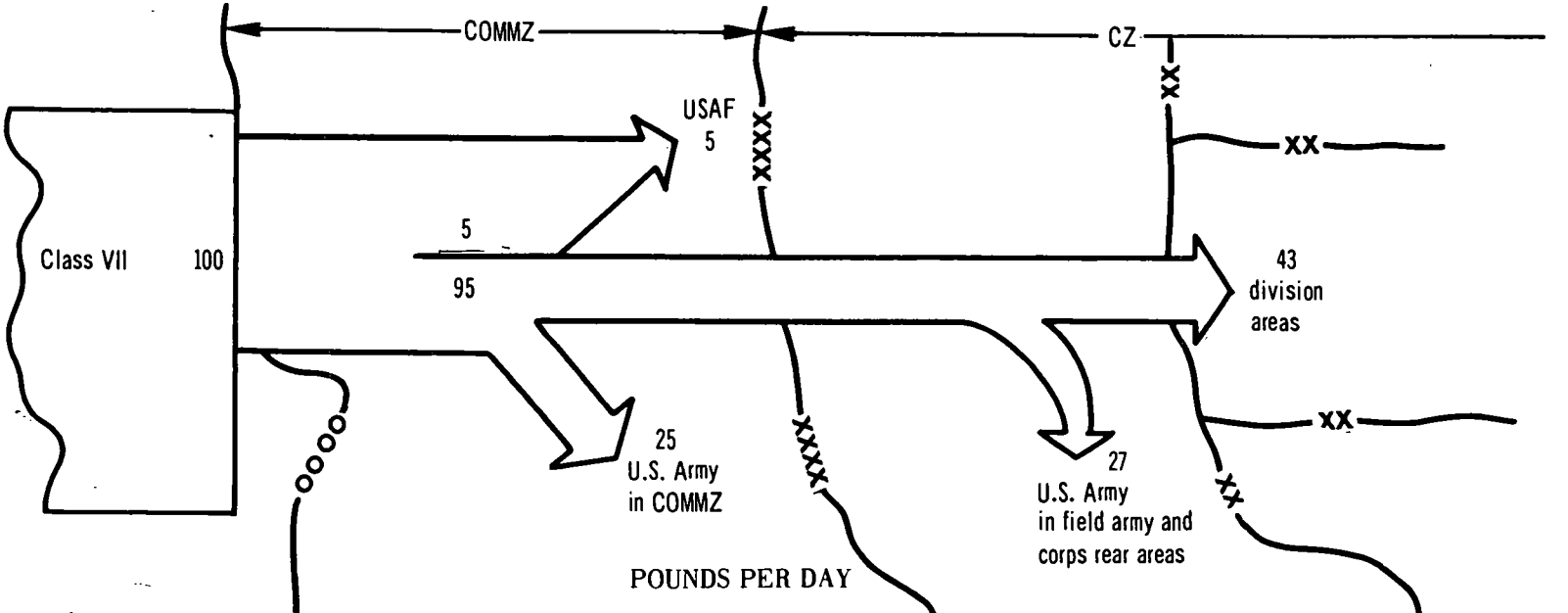

Item	Consumed per man in theater, Army plus USAF	Consumed by Army in theater per Army man in theater	Consumed by USAF in theater per USAF man in theater*	Consumed by Army in COMMZ per Army man in COMMZ	Consumed by Army in combat zone per Army man in combat zone	Consumed by Army in field army and corps rear areas per Army man in such areas	Consumed by Army in division areas per Army man in such areas
Class VII	3.04	3.51	0.89	3.60	3:47	3.45	3.50

*Includes Army troops required in the theater because of the presence of USAF elements.

Figure 5–9. Short tons per division slice per day—class VII.

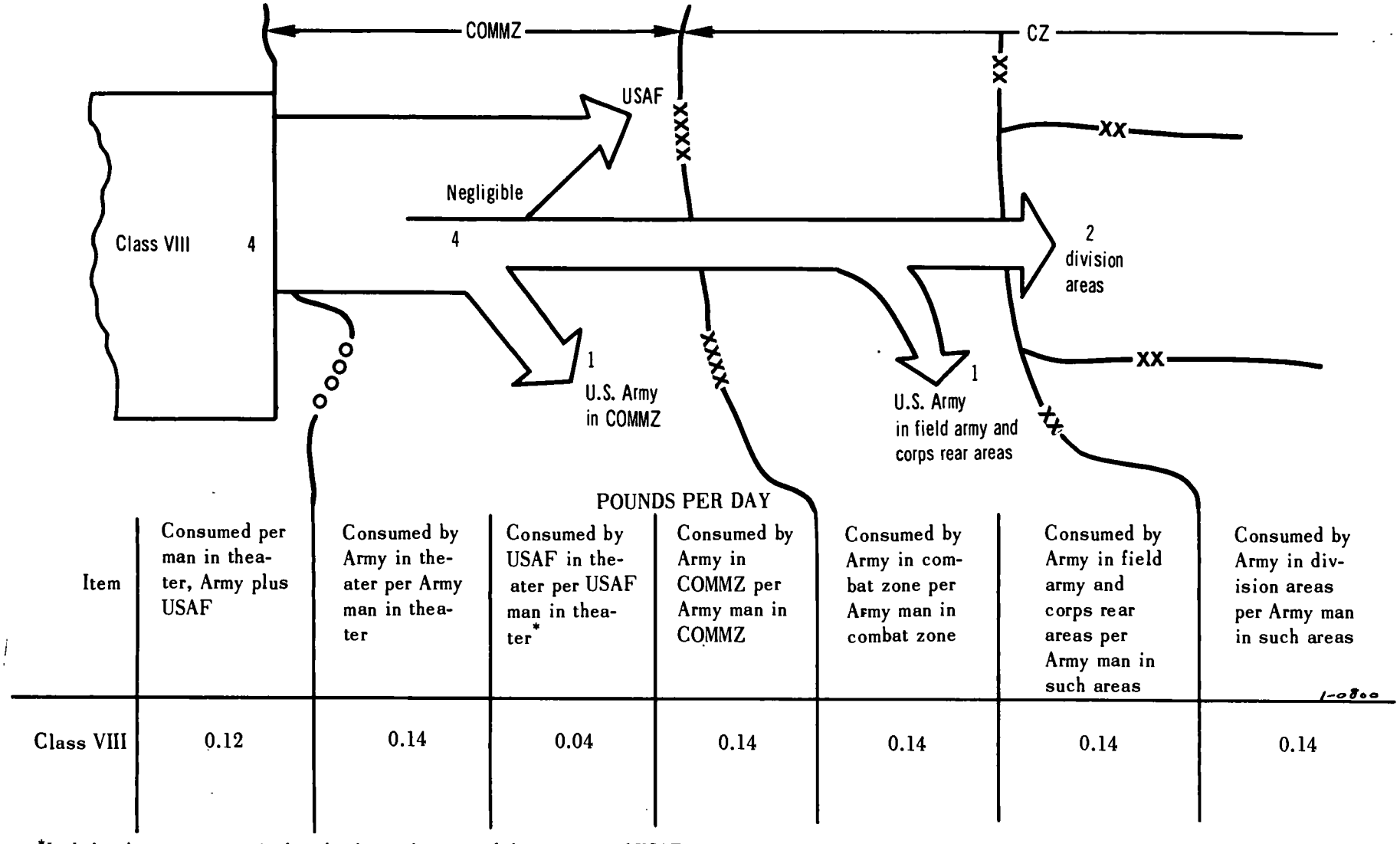

Item	Consumed per man in theater, Army plus USAF	Consumed by Army in theater per Army man in theater	Consumed by USAF in theater per USAF man in theater*	Consumed by Army in COMMZ per Army man in COMMZ	Consumed by Army in combat zone per Army man in combat zone	Consumed by Army in field army and corps rear areas per Army man in such areas	Consumed by Army in division areas per Army man in such areas
Class VIII	0.12	0.14	0.04	0.14	0.14	0.14	0.14

*Includes Army troops required in the theater because of the presence of USAF elements.

Figure 5–10. Short tons per division slice per day—class VIII.

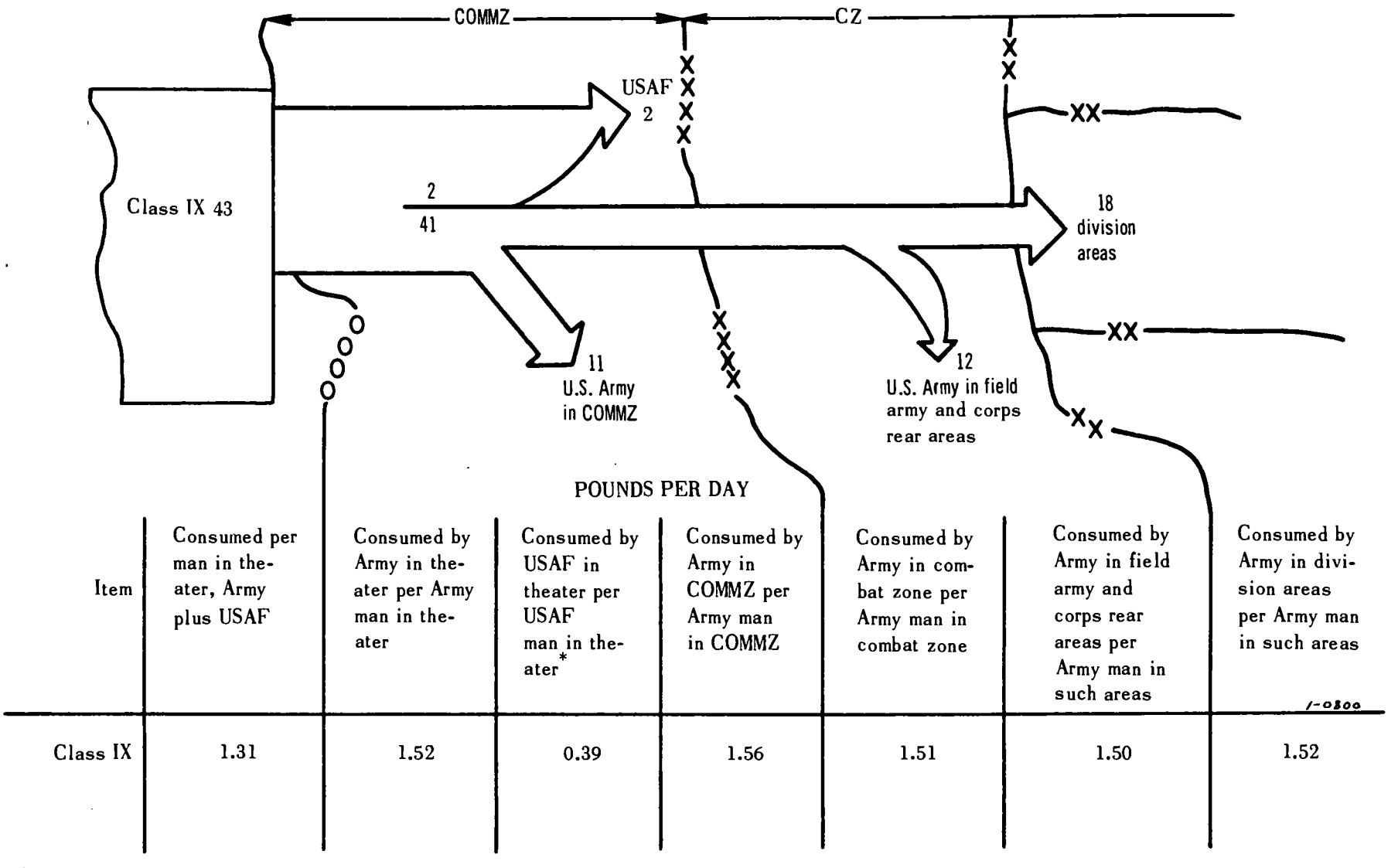

*Includes Army troops required in the theater because of the presence of USAF elements.

Figure 5–11. Short tons per division slice per day—class IX.

Table 5-42. Consumption Rates—All Classes (Lb Per Man Per Day)

1	1 Supply class	2 USAREUR	3 Figure 5-2
2	I	6.27	7.31
3	II	7.04	3.26
4	III A	4.64	--------
5	III HVJW	51.17	47.80
6	IV	4.06	6.80
7	V A	0.96	--------
8	V WNYZ	23.04	23.40
9	VI	4.50	2.59
10	VII A	0.16	
11	VII B	0.82	
12	VII D	0.10	
13	VII G	0.25	
14	VII K	0.80	3.51
15	VII L	0.40	
16	VII M	0.40	
17	VII N	0.04	
18	VIII	0.30	0.14
19	IX A	0.31	
20	IX B	0.31	
21	IX D	0.16	
22	IX G	0.48	
23	IX K	1.55	1.52
24	IX L	0.15	
25	IX M	0.25	
26	IX N	0.03	
27	IX T	0.03	
28	X	5.90	--------
29	Total	114.12	96.33

ments for other equipment are established on a reasonable hourly operational basis for 5 days.

(*c*) Class V supply weights are based on the basic load, both ground and air.

c. Table 5–44 shows consumption rates for class III supplies.

d. Table 5–45 shows consumption rates for class VI supplies.

(1) Column 2 is based on study estimates for a 150-day period. Figures do not include sundries pack issued with rations at 0.369 pound per man per day. Columns 3 and 4 do not include items procured locally.

(2) Recreational and sports supplies (Table 5–45) do not include items procured locally or items procured from any source with nonappropriated funds, as defined in AR 230–1.

e. Table 5–46 shows consumption rates for class IX supplies.

Table 5-43. Sample Computation of Requirements

1	1 Supply class	2 TOE 1-75G STON	3 TOE 1-75G MTON	4 Supplies STON	5 Supplies MTON	6 Total STON	7 Total MTON
2	I			5.8	12.2	5.8	12.2
3	II	11.1	20.5	19.4	54.4	30.6	74.9
4	III A	17.6	----------	4.3	6.6	21.9	6.6
5	III HVJW	6.2	----------	47.0	76.5	53.2	76.5
6	IV	1.0	1.5	11.2	16.8	12.2	18.3
7	V			23.9	21.5	23.9	21.5
8	VI			12.4	21.1	12.4	21.1
9	VII A	103.2	[a] 3,356.0	0.5	2.0	103.7	3,358.0
10	VII B	7.4	25.0	2.3	7.6	9.7	32.6
11	VII G	17.0	23.0	0.7	2.7	17.7	25.7
12	VII K	350.0	2,792.4	2.4	5.3	352.4	2,797.7
13	VII LM	7.8	43.0	2.2	4.0	10.0	47.0
14	VIII			0.9	2.3	0.9	2.3
15	IX	8.3	5.0	9.0	19.8	17.3	24.8
16	X			16.3	32.6	16.3	32.6
17	Pers	44.0	[b] NA	----------	----------	44.0	----------
18	Total	573.6	6,266.4	158.3	285.4	732.0	6,551.8

[a] Reduced cube is given.
[b] NA—seating capacity applies.

Table 5-44. Class III Consumption Rates

1	1 Product	2 Lb per man per day	3 Gal per man per day
2	Army gnd bulk petrl fuels	50.77	8.05
3	MOGAS	(38.19)	(6.25)[a]
4	Diesel	(12.58)	(1.80)[a b]
5	Eng oil	1.00	0.10[a]
6	Gear lubs	0.80	0.80[a]
7	Grease	0.60[c]	

[a] Data based on SB 710-2, chap 2, sec I, for France and Germany.
[b] Data on M40 tanks from consumption rates established during exercises in Europe.
[c] Class III A supply requirements must be individually computed from fuel data for Army aircraft.

Section VII. STORAGE

5-28. Definition of Terms

An understanding of the following terms is necessary to use the data in this section in determining storage area requirements. (See AR 310-25 and the TM 743-200 series.)

a. Storage space—Any space, without regard to type of construction or improvement, used for storage.

b. Storage building—Any building constructed or acquired for the storage of supplies, even though some part of it has been diverted to and is used for offices, depot utility storage, or repair shops. Depot utility storage buildings, except when they are used in whole or in part for the storage of supplies, are not considered storage buildings. The actual area used for storage purposes within such a building is considered storage space for reporting purposes.

Table 5-45. Class VI Consumption Rates

1	1 Item	2 Lb per man per day	3 STON per 10,000 men per mo	4 MTON per 10,000 men per mo
	Army Exchange Items			
	Combat zone:			
2	Army in amph op	0.533	80.00	200.00
	Theater:			
3	European	1.428	210.00	430.00
4	Pacific	1.571	240.00	500.00
	Special Services Items			
	Donated items:			
5	Total donated items		0.15	0.50
	Recreational:			
6	Books and magazines		0.75	1.00
7	Music, theatrical, crafts, and misc		1.00	2.00
8	Sports		0.75	2.00
9	Total recreational		2.50	5.00

Table 5-46. Class IX Consumption Rates

	1	2	3
1	Item	STON per 25,000 men per mo	MTON per 25,000 men per mo
2	Motion-picture service supplies---	0.152	0.247

(1) *Warehouse space*—Area in a building designed for storage purposes and constructed with a roof and complete side and end walls.

(2) *Heated space*—Area in which the temperature may be controlled by the application of heat within specified limits.

(3) *Unheated space*—Area not equipped with heating facilities.

(4) *Humidity-controlled space*—Warehouse area equipped with humidity-control equipment.

(5) *Flammable space*—Warehouse area designed for the storage of highly flammable material.

(6) *Shed space*—Space in a covered structure having one or more sides or ends open or both. Does not include covered X-sites, Y-sites (AR 310-25), or transitory-type shelters.

(7) *Other space*—Space being used for storage in any structure designed for other than storage purposes (e.g.. barracks, dry tanks, hangars, transitory shelters, and Quonset buildings). Covered X-sites and Y-sites, hutments, and temporary canvas shelters are included when used for storage.

c. Gross space—Inside area between exterior walls without deductions for firewalls and other structural losses. Overall measurements of open storage area, with no deduction for trackage and permanent roads in the area.

d. Bin storage—Storage of unpackaged parts, assemblies, subassemblies, or end items in bins so that an item may be withdrawn without breaking open a package containing a number of such items.

e. Aisle in storage space—Any passage within a storage area.

f. Receiving and shipping space—Gross space designated as work area for receipt and shipment of supplies and equipment.

g. Nonstorage space—That area within gross space which is not used for storage because of structural losses or designation for other than storage purposes. Includes transit shed space when used or reserved for that purpose.

h. Net storage space—The floor area on which bins are erected plus the floor area on which material can be stored.

i. Open storage space—Ground area designated for storage.

j. Open, improved storage space—Open area that has been graded and hard surfaced or prepared with topping of some suitable material to permit effective materials-handling operations.

k. Open, unimproved storage space—Open area that has not been surfaced for storage purposes.

l. Open, unimproved wet space—That water area specifically allotted to and usable for the storage of floating equipment.

m. Magazine area—The area in a covered structure, above or below ground, constructed for the storage of ammunition and explosives.

n. Tank storage space—Space in tanks designated for the storage of supplies other than petroleum products.

o. Ammunition and toxic materiel open space—Area especially prepared for storage of explosive ammunition and toxic materiel. For reporting purposes, it does not include the surrounding area restricted for storage because of safety distance factors. It includes barricades and improvised coverings.

p. Cold storage warehouse—Space in which a controlled temperature below 50° F. may be maintained.

(1) *Chill space*—Refrigerated warehouse space in which the temperature can be controlled between 32° F. and 50 F.

(2) *Freeze space*—Refrigerated warehouse area in which the temperature can be controlled below a level of 32° F.

q. Allocated space—That area designated by higher authority representing the gross area formally apportioned for use.

r. Dispersed storage area—That portion of a depot or subinstallation that is geographically located away from the main establishment, but not at another reporting installation.

s. Site area—

(1) In covered storage, the total land area

required for buildings, spaced at minimum distances, plus all the necessary operating areas, such as access roads, depot roads, railway sidings, and truck parks.

(2) In open storage, the total land surface required for net usable general storage area as defined above plus that additional area required to fulfill safety regulations and to operate properly the storage facility as a whole.

t. Vertical space occupancy effectiveness—A factor obtained by dividing actual by potential storage height for a specific supply category.

5–29. Storage Factors

a. Table 5–47 gives optimum storage tonnage area requirements for support of military operations. These data are for general planning purposes only and may vary substantially as a result of climatic conditions or the tactical situation. For detailed data on storage planning, see the TM 743–200 series.

b. For classified data pertaining to storage of hazardous materials, see FM 101–10–3.

c. Table 5–48 gives factors for storage of maps. For plastic relief maps, consult experience factors or the Army Topographic Command.

Table 5–47. Theater Tonnage and Space Requirements

1	1 Supply class	2 Consumed per man in thtr (Army plus USAF) (STON per man per mo)	3 Percentage of STON of sup stored		4 STON per man per mo of sup stored		5 Sq m per STON		6 Required space per man per mo of sup (sq m)	
			Covered	Open	Covered	Open	Covered	Open	Covered	Open
2	I	0.1065	60	40	0.0639	0.0426	1.39	1.86	0.0890	0.0792
3	All other	0.2316	50	50	0.1158	0.1158	0.93	1.49	0.1076	0.1719
4	III	0.9195	(Tk farm)							
5	V W	0.4074	10	90	0.0407	0.3667	1.39	1.86	0.0568	0.681
6	V A	0.0549	(Air dep)							

Table 5–48. Storage of Maps

1	1 Item	2 Avg wt (lb)	3 Avg cum (for stor)
2	Bundle, 500 map sheets	60	0.057
3	Crate, 1,000 map sheets	150	0.142

Table 5–49. Gross Space and Site Area Factors

1	1 Supply class	2 Gross space factors [a]		3 Site area factors [b]	
		Covered	Open	Covered	Open
2	I	1.40	1.50	2.00	1.50
3	All other	1.66	1.75	2.27	2.00
4	III [c]	1.25	1.30	1.80	1.43
5	V	1.25	1.25	112.00 [d]	(c)

[a] Apply additional factor of 3 for storage in the combat zone.
[b] Apply additional factor of 5 for storage of class I, II, III, IV, and VII in the combat zone.
[c] Excludes bulk storage of petroleum in tanks.
[d] These factors consider the dispersion necessary as a safety precaution in storing ammunition.
[e] See paragraph 5–30.

5–30. Average Stack Heights

Figures in *a* and *b* below are for use in theaters. For CONUS storage, increase by 25 percent.

a. Covered Storage. All Services, 8 feet.

b. Open Storage. All Services, 6 feet.

5–31. Gross Space and Site Area Factors

The factors in table 5–49 provide requirements for gross space (as defined in paragraph 5–28*c*) and site area square footage, i.e., by multiplying requirements in table 5–47, columns 9 and 10, by each factor in turn.

5–32. Operating Personnel Required for All Storage in a Theater

Figure 5–12 may be used to determine personnel requirements for all storage operations in a theater. Prisoners of war and civilians may be included, as available.

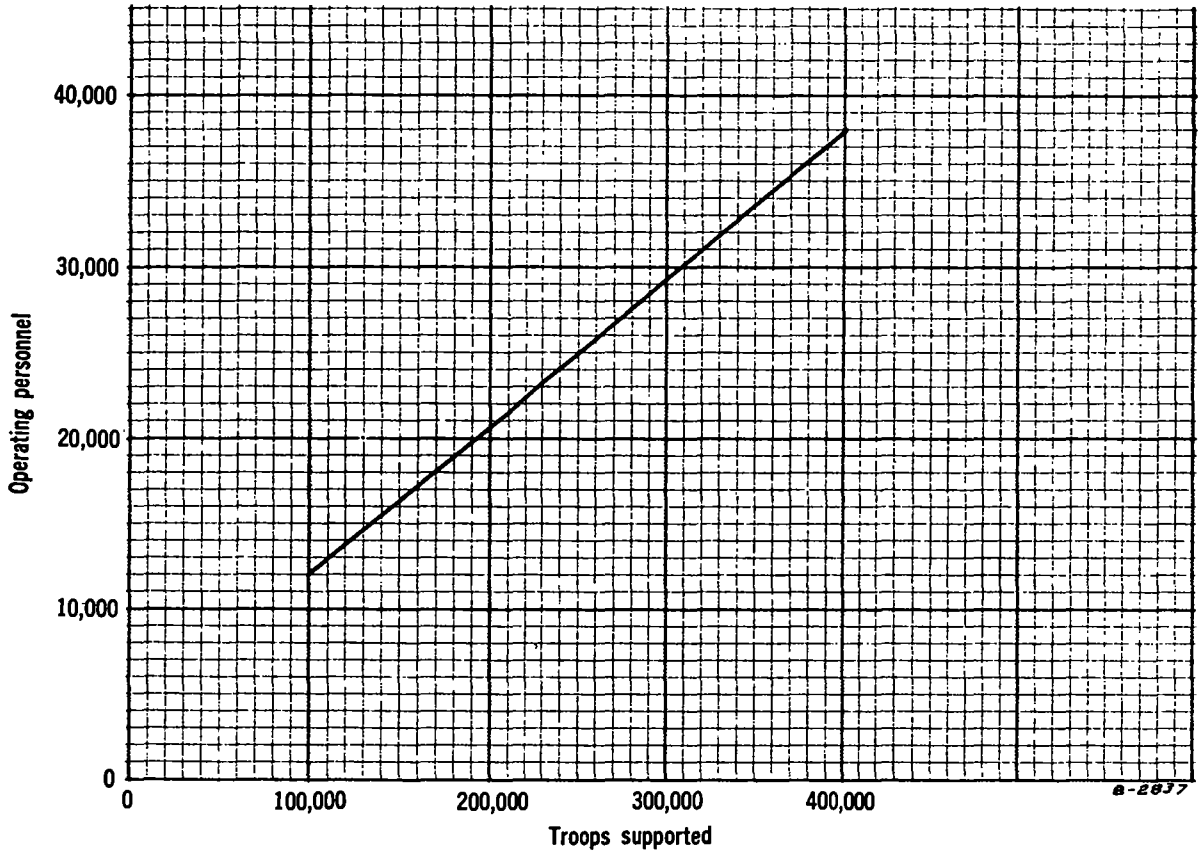

Figure 5–12. Requirements for storage personnel.

5–33. Miscellaneous Storage Requirements [1]

Ammunition storage per kilometer of road [2]	621 STON
Ammunition storage per square kilometer [2]	1,931 STON
Minimum hardstand requirements for 2,500 vehicles [3]	110,000 sq ft
Solid footing for vehicle park for 2,500 vehicles	4,000,000 sq ft
Minimum hardstand requirement for artillery and combat vehicles, per item	350 sq ft

5–34. Handling of Supplies

a. Labor Requirements.

(1) *Hand operations.* For long-term planning, labor requirements for handling supplies by hand are computed on the average of ½ ton per man per hour for 10 hours each day. For short periods, the average is much higher.

(2) *Mechanical handling.* For planning, the labor requirements for handling supplies by mechanical equipment, such as forklift trucks and tractor-trailer trains, normally are limited to a working foreman and equipment operators to operate the mechanical equipment necessary to handle these supplies efficiently.

b. Handling Crews.

(1) *Hand operations.* The number of men who may be employed advantageously in loading or unloading one freight car is nine (one working foreman and eight laborers). The maximum crew for loading or unloading average loads by hand on Army trucks is five (one working foreman and four laborers).

(2) *Mechanical handling of palletized loads.* The number of men who may be employed advantageously in loading or unloading one freight car or truck of palletized supplies using mechanical-handling equipment is three (one working foreman and two materials-handling equipment operators).

c. Time Estimate (Based on Manual Handling). The time estimate for average packaged or bundled military loads at depots, supply points, or

[1] Reference: TM 9–1300–206 (overseas only).

[2] Refers to temporary storage of ammunition along roadways and in urban fields and forest, such as may be found in combat zones.

[3] Data are based on the assumption that hardstand area will not be required for the total number of vehicles at any one time.

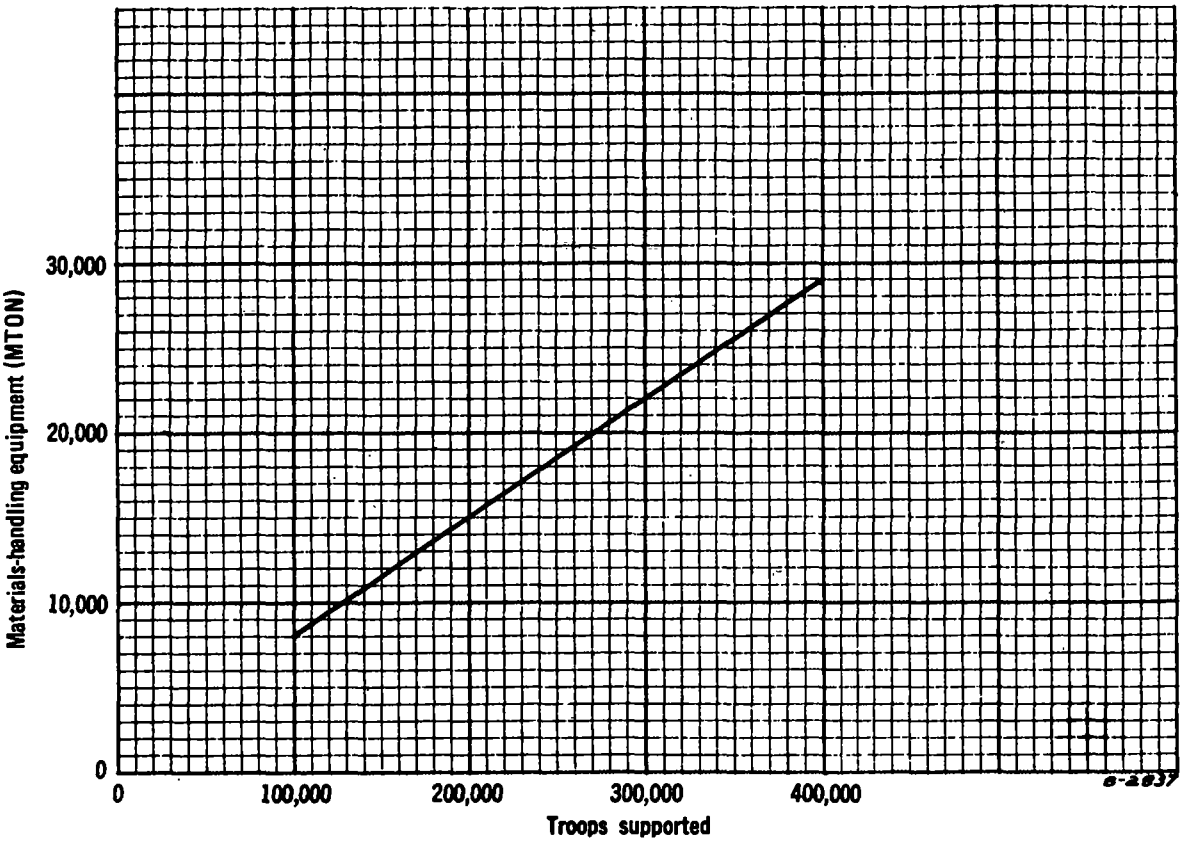

Figure 5–13. Requirements for materials-handling equipment.

using units, under average conditions, with a five-man crew for each truck or trailer and the number of trucks or trailers to be loaded or unloaded simultaneously, depending on amount of labor available, is as follows:

Loading and unloading	*2½-ton truck*	*1½-ton trailer*
Average time	50 min	20 min
Minimum time	30 min	12 min

5–35. Materials-Handling Equipment Requirements

A depot supplying 100,000 men will require about 7,700 MTON of materials-handling equipment, including conveyors, pallets, scales, tractors, trailers, forklift trucks, handtrucks, lumber-straddle trucks, and stockpicker trucks (fig 5–13).

5–36. Illustrative Problems

a. Situation, Problem A. To determine storage requirements for a theater of operations requiring 100,000 MTON of class I supplies.

b. Solution, Problem A. Storage area requirements:

An MTON = 40 cu ft.

Therefore, 100,000 MTON × 40 = 4,000,000 cu ft of supplies to be stored.

Minimum percentage of covered storage required is 60 percent (table 5–47).

Therefore, 40-percent open storage is required.

0.60 × 4,000,000 cu ft = 2,400,000 cu ft of supplies requiring covered storage.

0.40 × 4,000,000 cu ft = 1,600,000 cu ft of supplies to be stored in the open.

Average stack heights (para 5–30):

Covered storage = 8 feet.

Open storage = 6 feet.

2,400,000 cu ft ÷ 8 ft = 300,000 sq ft net usable area of covered storage required.

1,600,000 cu ft ÷ 6 ft = 267,000 sq ft net usable area of open storage required.

Gross space for each type of storage is based on net usable general storage area. Factors for computations, as found in table 5–49, are—

Covered storage = 1.4

Open storage = 1.5

(Assume storage is to be in the COMMZ; hence additional combat zone factor of 3 is not required.)

300,00 sq ft × 1.4 = 420,000 sq ft gross space required for covered storage.

267,000 sq ft × 1.5 — 40,500 sq ft gross space required for open storage.

Site areas for each type of storage are based on gross. Table 5–49 contains factors for computations.

Covered storage = 2.0.
Open storage = 1.5.

(Assume storage is to be in the COMMZ; hence, additional combat zone factor of 5 is not required.)

420,000 sq ft × 2.0 = 840,000 sq ft site area required for covered storage.

400,000 sq ft × 1.5 = 600,750 sq ft site area required for open storage.

Total site area required:

Covered storage	= 840,000 sq ft
Open storage	= 600,750 sq ft
	1,440,750 sq ft

1,440,750 sq ft ÷ 53,560 sq ft (1 acre) = 30.7 or 31 acres of site are required.

c. Situation, Problem B. To determine operating personnel and materials-handling equipment requirements for all storage in a theater that has a strength of 250,000 men.

d. Solution, Problem B.

(1) *Part I, operating personnel requirements.* On the horizontal scale of figure 5–12 (para 5–32) locate the vertical line representing 250,000 men. This line crosses the oblique graph line at the horizontal line representing 24,500 *operating* personnel, as indicated on the left margin. Therefore, for general planning purposes, 24,500 men are needed to operate theater depots.

(2) *Part II, materials-handling equipment requirements.* Using the same theater strength of 250,000 men, figure 5—13 shows that 18,500 MTON of materials-handling equipment will be required.

5–37. Characteristics of Materials-Handling Equipment

Table 5–50 lists materials-handling equipment and certain characteristics, to include load and lift capacities. (See also table 5–31.)

Table 5–50. Characteristics of Materials-Handling Equipment

1	1 Item and line item number	2 Dimensions: Length (ft)	3 Dimensions: Width (ft)	4 Dimensions: Height (ft) (min)	5 Weight (STON): Operating	6 Weight (STON): Shipping	7 Displacement (cu ft)	8 Capacity: Load (lb)	9 Capacity: Height of lift	10 Types of tires (S—solid rubber) (P—pneumatic)	11 Method of operation	12 Primary use
2	Trk, lift, fork											Useful in moving and stacking palletized loads.
3	X49188	5.79	2.67	7.04	2.00		109	2,000	8 ft 4 in	S	Elec	
4	X50284							4,000	10 ft 7 in	S	Elec	
5	X50421	6.79	3.50	7.58		3.85	180	4,000	12 ft 0 in	S	Elec	
6	X50969	8.42	3.50	9.67		4.47	285	6,000	14 ft 0 in	S	Elec	
7	X51106	5.75	3.67	7.00	2.24		148	2,000	10 ft 7 in		Gas	
8	X51243							2,000	9 ft 4 in	S	Gas	
9	X51380	10.08	6.52	8.46		3.25	556	4,000	12 ft 0 in	P	Gas	
10	X51654	7.17	3.83	7.17		3.90	197	4,000	15 ft 0 in	S	Gas	
11	X51791	9.71	5.63	9.50		5.40	51	6,000	14 ft 0 in	P	Gas	
12	X52202	10.33	3.50	8.67		4.00	313	6,000	10 ft 7 in	S	Gas	
13	X52339	8.75	4.17	10.00		5.35	365	6,000	14 ft 0 in	S	Gas	
14	X52613	11.92	4.42	5.65		6.60	305	10,000	8 ft 4 in	S	Gas	
15	X52750	12.33	7.17	12.50		8.20	1,105	15,000	17 ft 6 in	P	Gas	
16	Trk, lift, fork, rough terrain											Transfer of cargo on unimproved surfaces; most common usage, beach operations.
17	X51928	15.13	7.17	7.50		13.50	812	6,000	12 ft 0 in	P	Gas	
18	X52476	16.94	8.58	8.33		15.00	1,350	10,000	12 ft 0 in	P	Gas	
19	Trk, platform, util, 1/2-ton, 4×4, with equip.											Primarily for transporting unit loads short distances. May be used for stacking. Less expensive than fork lift trucks, but less maneuverable.
20	X55627	9.83	4.16	4.08			86	10,000	0 ft 4 in		Elec	
21	Trac, wheeled, whs							Drawbar pull (lb)				Used for towing one or more trailers. The tractor is small and menauverable and should be used for moving when distance exceeds 250 feet.
22	W89009	6.17	3.46	5.67		1.35	121	2,000		S	Elec	
23	W89283	7.17	3.54	5.13		1.77	130	4,000		S	Elec	
24	W89557	9.83	5.67	5.58		2.50	311	4,000		P	Gas	
25	W89594	9.92	5.83	4.75		4.98	275	7,500		P	Gas	
26	Crane, trk, whs							Load (lb)				Handles loads of shapes and sizes that are difficult to move with other equipment.
27	F38967	11.60	5.38	6.04		6.00	377	6,000		S	Elec	
28	F39104	13.08	8.00	6.42		10.35	672	10,000		P	Gas	

Table 5-50. Characteristics of Materials-Handling Equipment—Continued

1	1 Item and line item number	2 Dimensions: Length (ft)	3 Dimensions: Width (ft)	4 Dimensions: Height (ft) (min)	5 Weight (STON): Operating	6 Weight (STON): Shipping	7 Displacement (cu ft)	8 Capacity: Load (lb)	9 Capacity: Height of lift	10 Types of tires (S—solid rubber) (P—pneumatic)	11 Method of operation	12 Primary use
29	Trk, straddle-carry											Used extensively for moving lumber, poles, pipe, rods, and girders.
30	X56997	16.00	8.00	13.54		8.25	1,733	30,000		P	Gas	

Section VIII. DISTRIBUTION

5–38. Normal Order and Shipping Times

Table 5–51 illustrates the time to process normal bulk shipment of supplies. Times shown are for illustrative purposes only and represent an average of the probable maximum time intervals for processing a wide variety of items under varying conditions. Such intervals will increase or decrease depending on the length and complexity of the requisition, the class of supply, the distance of the theater from the CONUS, the availability of transportation, the type of transportation and handling facilities employed, and the workload on the various installations.

5–39. Army Repair Parts Supply System

The Army supply system is based on selective stockage, single-line-item requisitions, and electronic transmission and processing of supply data. Requisitions are processed through the field army support command and the theater army support command to CONUS supply sources by means of high-speed data transmission equipment (transceivers). When coupled with centralized stock control, high-speed data processing equipment, and direct delivery of theater nonstocked items to forward supply points, the system offers substantial reduction in order and shipping times.

5–40. Buildup of Supply Levels

a. For estimation of requirements when it is desired to build up a certain level of supplies by a given date, at the same time adequately supplying present and future contemplated operations during the buildup period, the following formula is useful:

$$S = \frac{(1 + L + W)}{T}, \text{ when—}$$

S = shipping requirements during the buildup phase, expressed in pounds per day.
C = consumption (average) in pounds per day.
L = the supply level to be attained, expressed in days of supply.
T = time length of buildup phase in days. (Given any four of the factors, the fifth can be determined by transposing.
W = wastage factor (percentage of total consumption expressed as decimal). This factor is based on experience in the particular theater and normally ranges from 0 to 0.25.

b. Since the formula in *a* above assumes a constant troop strength, a chart similar to figure 5–14 may be used to show the relationship between changes in troop strength, the cumulative consumption, and the cumulative receipts in the establishment of a specified level of supply during a given buildup period.

5–41. Lines of Communication Buildup Capacity

a. General.

(1) The chart in figure 5–15 indicates the maximum cumulative strength that can be built up in the shortest time, using lines of communications of fixed capacity, if these lines of communications also carry replenishment loads for personnel previously transmitted.

(2) The chart is applicable to situations in which maintenance loads are directly proportional to loads previously carried (initial loads) and has been prepared for the values 2, 4, 6, and 10 of R (ratio of initial to maintenance loads). More lines can be added readily to the chart for additional values of R.

(3) For each value of R, two lines are shown on the chart—one solid and one dashed. For each value of R, the use of solid or dashed line in computations depends on the assumption applicable to the situation.

(*a*) The solid-line curve in each case is based on the assumption that at any time T, the strength being served on a maintenance basis, is equal to the accumulation of strength previously served on an initial basis (i.e., maintenance begins immediately on arrival in the theater, and initial loads are not alternately depleted and replenished).

(*b*) The dashed-line curve in each case is based on the assumption that the increment of strength served on an initial basis in any 1 month will be served on a maintenance basis during the following month (i.e., initial loads would be depleted, on the average, by about 15 days' maintenance supply before replenishment would begin).

b. Construction of Curves for Additional Values of R. To construct curves for values of R other than those shown in figure 5–15, proceed as follows:

(1) For solid lines (see assumption in *a*(3)(*a*) above), draw a straight line through the

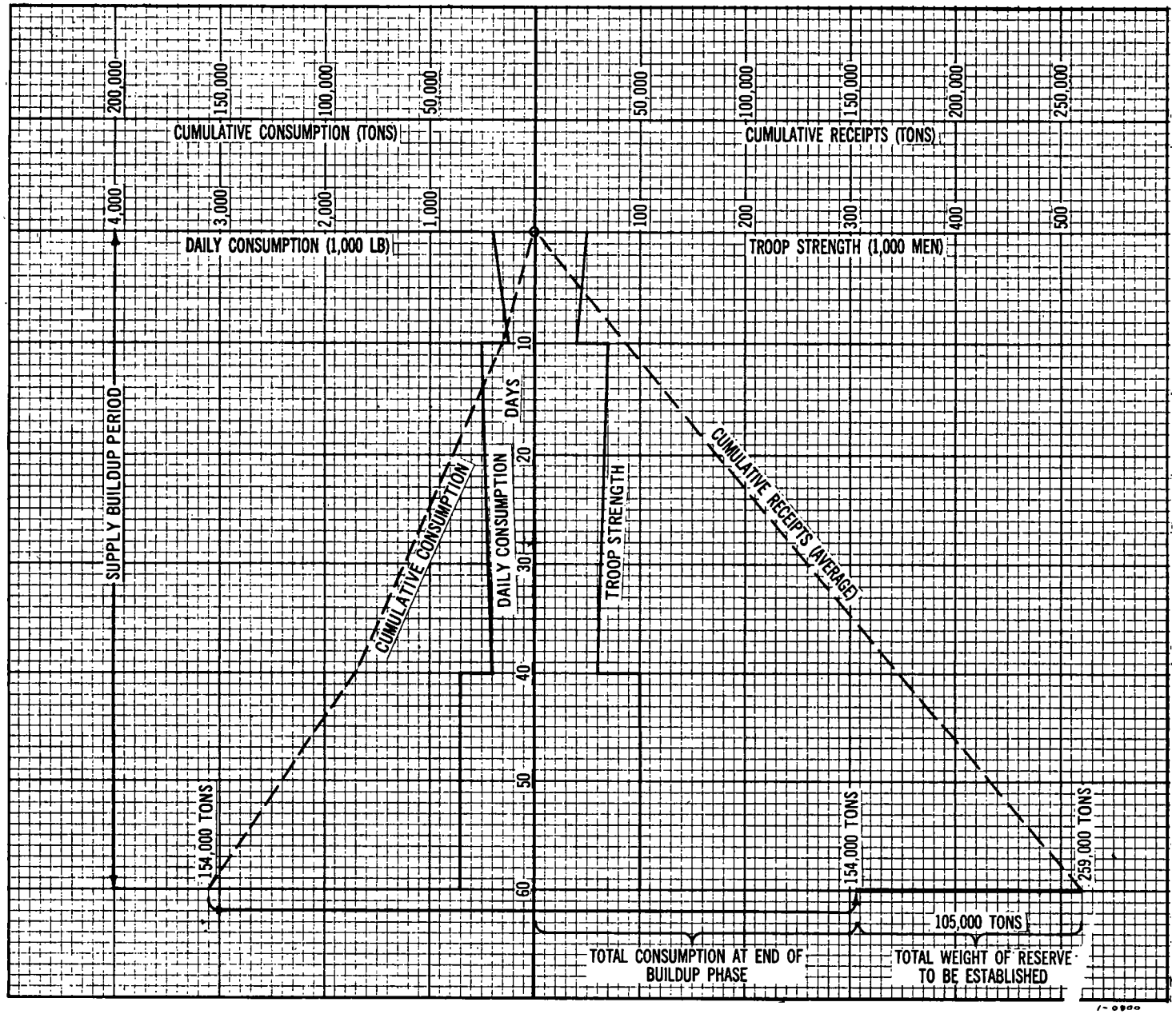

Figure 5–14. Supply-level relationships.

Table 5–51. Maximum Oversea Order and Shipping Time Allowance for Troop Support Requisitions

	1	2	3	4	5	6	7	8	9	10	11	12	13	14
	Area [a]	A	B	C	A	B	C	A	B	C	A	B	C	
	Issue group		1			2			3			4 [b]		
1	Priority designators	1 through 8			4 through 8			9 through 15			16 through 20			Responsible agency
	Emphasis required	7-day workweek, 24-hour workday—issue stocks to "0" balance						Regular workweek, regular-shift workday—issue to control level						
	Cycle segments	Consecutive hours			Calendar days			Calendar days			Calendar days			
2	From transmittal of requisitions by oversea command to receipt by initial source of supply	0	0	0	0	0	0	1	1	1	1	1	1	Oversea command.
3	From receipt of requisition by initial source of supply until supplies are released to carrier	24	24	24	3	3	3	10	10	10	12	12	12	Initial source and shipping activities.
	Note. This time is divided as follows:													
4	Stock control activity	(8)	(8)	(8)	(1)	(1)	(1)	(3)	(3)	(3)	(4)	(4)	(4)	Initial source.
5	Shipping activity	(16)	(16)	(16)	(2)	(2)	(2)	(7)	(7)	(7)	(8)	(8)	(8)	Shipping activity.
6	From date supplies are turned over to carrier until receipt at oversea terminal	88	88	88	8	8	8	28	28	28	37	37	52	Transportation agency.
	Note. This time is divided as follows:													
7	Time depot to terminal	(24)	(24)	(24)	(2)	(2)	(2)	(5)	(5)	(5)	(9)	(9)	(9)	
8	Time in terminal	(12)	(12)	(12)	(2)	(2)	(2)	(5)	(5)	(5)	(10)	(10)	(10)	
9	Time in transit (air or sea)	(52)	(52)	(52)	(4)	(4)	(4)	(18)	(18)	(18)	(18)	(18)	(33)	
10	From receipt at oversea terminal to recorded receipt by requisitioner	56	56	56	4	4	4	11	6	6	15	10	10	Oversea command.
	Note. This time is divided as follows:													
11	Time in discharge	(24)	(24)	(24)	(2)	(2)	(2)	(3)	(3)	(3)	(7)	(7)	(7)	
12	Terminal intratheater movement and recording in requisitioner's records	(32)	(32)	(32)	(2)	(2)	(2)	(8)	(3)	(3)	(8)	(3)	(3)	
13	Total	168	168	168	15	15	15	50	45	45	65	60	75	

[a] Area A—Europe; area B—Alaska, Bermuda, Caribbean, Hawaii, and South America; area C—all other oversea areas.

[b] See AR 725–50 for instructions on the assignment of required delivery date beyond the normal order and shipping time for issue group 4.

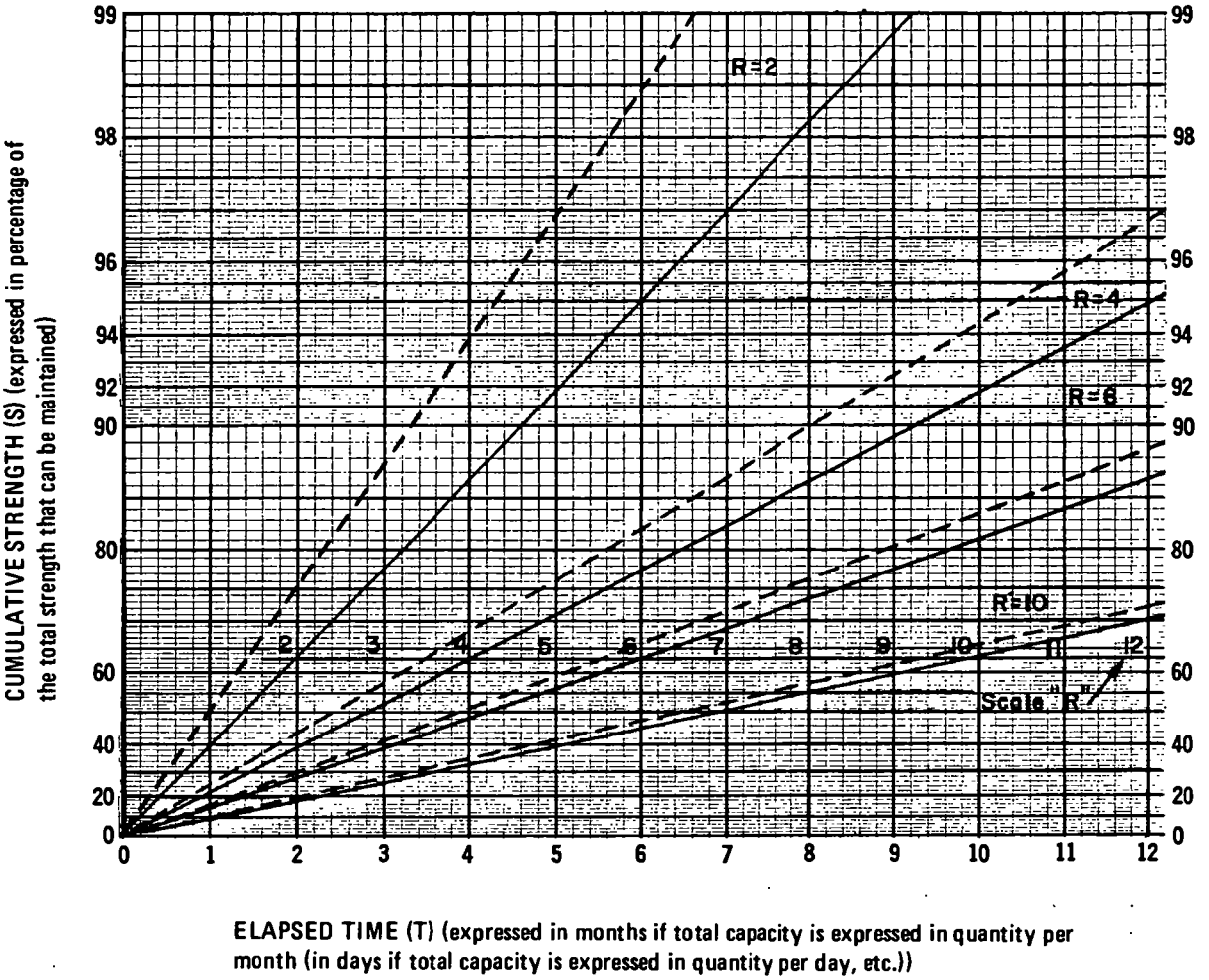

Figure 5–15. Lines of communication capacity.

origin (0, 0) and the point on scale R representing the value of R (ratio of initial to maintenance loads).

(2) For dashed lines (see assumption in $a(3)(b)$ above), draw a straight line through the origin (0, 0) and the point on scale R that is less by 0.5 than the value of R.

c. Examples of Use of Chart. The chart in figure 5–15 may be used in calculations relating to a movement of troops or supplies through a terminal or, analogously, to their movement over any available line of communications, e.g., a railroad, a highway, an air transport route. It can be used to determine the time it would take to reach various strengths, the strength that can be accumulated in any amount of time, and the necessary shiploads of initial or maintenance supplies. The ratio R may be based on space requirements; number of cars, ships, tonnages; number of individuals; etc.

(1) *Example 1.*

(*a*) *Problem.* The capacity of a port = 300,000 MTON per month. Initial equipment for troops moving through the port = 4.8 MTON per man; supplies for maintenance of troops moved through the port = 0.8 MTON per man per month. What strength can be built up through this port in 7 months if maintenance for the troops begins immediately with their arrival in the theater?

(*b*) *Solution.*

1. R = initial ÷ maintenance load = 4.8 ÷ 0.8 = 6.

2. T = time elapsed = 7 months.

3. From the chart, locate $T = 7$ on the horizontal scale; continuing vertically upward to the intersection of $T = 7$ with the *solid* line for $R = 6$, read "Cumulative Strength (S)" from the vertical scale = 69 percent of the total strength that can be maintained.

4. Total strength that can be maintained = 300,000 ÷ 0.8 = 375,000 troops.

5. Therefore, cumulative strength after 7 months = 69 percent of 375,000 = 259,000 troops.

(2) *Example 2.*

(*a*) *Problem.* Assuming the same circumstances as in (1)(*a*) above, how many new troops will be moved through the port during the 7th month?

(*b*) *Solution.*

1. Proceed as in (1)(*b*) above, except determine the cumulative strength after 6 month = 64 percent of the total strength that can be maintained.

2. From the solution in (1)(*b*) above and the foregoing, the observation is that from the end of the 6th to the end of the 7th month (i.e., during the 7th month) the cumulative strength changed from 64 percent to 69 percent of the total strength that could be maintained.

3. Therefore, the new troops moved in during the 7th month represent 69 percent less 64 percent = 5 percent of the total strength that can be maintained = 5 percent of 375,000 = 18,750 troops.

(3) *Example 3.*

(*a*) *Problem.* Assuming the same circumstances as in (1)(*a*) above, except that the maintenance factor of 0.8 MTON per man per month is so established that maintenance can start during the following month for all troops moved initially during any 1 month, what could be the strength built up after 7 months?

(*b*) *Solution.*

1. Proceed as in (1)(*b*) above, except that in using the chart, use the *dashed* line for $R = 6$ rather than the solid line.

2. Read cumulative strength = 72 percent of the total strength that can be maintained.

3. Cumulative strength after 7 months = 72 percent of 375,000 = 270,000 troops.

(4) *Example 4.*

(*a*) *Problem.* Initial and maintenance supplies for service forces are to be moved over a highway, the capacity of which is 10,000 STON per month. Initial equipment for these forces averages 3,350 pounds per man; maintenance averages 430 pounds per man per month. When will the size of the service force have been built up to 60 percent of its ultimate strength if maintenance supply must begin immediately on arrival of the forces in the theater?

(*b*) *Solution.*

1. $S = 60$ percent of the maximum that can be supported.

2. R = 3,350 ÷ 430 = 7.8.

3. Because no line for $R = 7.8$ appears on the chart, it must be constructed. Observing the assumption in the problem above as to initiation of maintenance, draw a solid line through the origin (0, 0) and the point 7.8 on scale R (in accordance with directions above).

4. Using the constructed line, as indicated in previous examples, determine for $S = 60$ percent that $T = 7$ months.

5–42. Direct Support/General Support Supply Units

Table 5–52 lists those supply and service units performing direct support and general support functions.

Table 5-52. Direct Support/General Support Supply Units

1	2
General support (GS)	Direct support (DS)
1. The general supply company, GS (TOE 29-118), establishes and operates a general supply facility for the receipt, storage, and issue of general supplies. When employed in the army service area, it maintains a portion of the field army reserve stocks. It can handle daily approximately 800 short tons of supplies, of which approximately 80 percent is handled mechanically and 20 percent is handled manually. The 800 short tons include a factor of 2.5 for receiving, intrastorage handling, and issue. It maintains an ASL of 12,500 line items.	1. The supply and service company, DS (TOE 29-147), provides DS supplies and services to nondivisional troops. It is assigned in FASCOM to support brigades and is normally attached to HHC, supply and service battalion, on the basis of one per 15,000 nondivisional troops supported.
2. The heavy materiel supply company, GS (TOE 29-127), receives, stores, and issues all types of self-propelled and towed equipment to divisions and nondivisional DS units; receives, stores, and issues fortification and construction supplies and bridging equipment; and combat loads equipment prior to issue, maintains a stock of approximately 2,200 line items that constitutes the ASL.	2. The general supply company, GS; the heavy materiel supply company, GS; and the petroleum supply company are also located in the corps areas to operate supply points, as required.
3. The repair parts supply company, GS (TOE 29-119), provides wholesale repair parts for all items, except cryptographic and topographic materials, items peculiar to missile systems, medical items, and class V supplies. Repair parts companies operating in the army service area do not provide repair parts for aircraft and aircraft armament subsystem items. The compny stocks about 40,000 to 45,000 line items, stores up to 15 days' supply of repair parts, excluding parts for aircraft armament subsystems. The company is capable of providing supply for the equivalent of two to four DS maintenance battalions and two GS maintenance battalions.	3. Repair parts supply companies operating in the corps area provide repair parts for aircraft and aircraft armament subsystem items. *a.* When employed in the corps area, the company stocks about 35,000 line items of repair parts. *b.* In the corps area, the company stores up to 15 days' supply of selected fast-moving repair parts.
4. The aircraft and missile repair parts supply company, GS (TOE 29-129), provides repair parts support for Army aircraft, Army aircraft armament subsystems, and avionics. The company also provides class II and IX missile-peculiar repair parts support (less repair parts peculiar to special ammunition) to DSU and GSU. The estimated total number of repair parts necessary to support the missile systems is 55,000 line items.	4. The field service company, GS, forward (TOE 29-114), provides field services that include laundry, lightweight textile renovation, graves registration services, decontamination service, fresh baked bread, salvage, and a pool of general duty (labor) personnel. *a.* Provides, when operating on two 10-hour shifts per day, bulk laundry and clothing exchange service in support of approximately 13,650 divisional troops, or provides emergency clothing impregnation service. *b.* Performs limited chemical, biological, and radiological decontamination of critical installations, terrain, and materiel in support of 16,000 troops, using decontaminants listed in TM 3-220; operates emergency personnel decontamination station with a capacity of 480 individuals per hour; and/or, as required, is adaptable to emergency firefighting and mobile shower service. *c.* When operating on one 12-hour shift per day, bakes and provides fresh bread for approximately 16,000 divisional troops based on a normal bread ratio of 0.5 pounds per man per day. See para 3*a*(5), TOE 29-114G.
5. The QM petroleum supply company (TOE 10-477) provides and operates petroleum storage facilities for the wholesale transfer operations to division support commands and DS petroleum supply platoons of the supply and service companies The company lays, operates, and retrieves petroleum hoselines, as required, and maintains a prescribed portion of the field army bulk stocks.	5. DS ASL of missile-system-peculiar repair parts are stocked at DSU organic to the firing battalions. These DSU support organizational PLL and their own DX operation.
6. The field service company, GS, army (TOE 29-124), provides field service that includes laundry, lightweight textile renovation, graves registration services, decontamination service, and a pool of general duty (labor) personnel. This unit is distinguished from the forward company (adjacent column) in that it has no bakery mission, but does operate a temporary military cemetery.	

CHAPTER 6

COMBAT SERVICE SUPPORT—TRANSPORTATION

Note. This chapter contains detailed unclassified data on transportation capabilities and methods of computing transportation requirements. The chapter presents a section on general transportation planning and a separate section on each of the major means of transportation required to support military operations by water, rail, highway, and air. FM 101-10-3 contains classified data pertaining to transportation.

Section I. PLANNING

6-1. Transportation Estimates and Plans

a. Transportation estimates and plans are necessarily dependent on the transportation user, whose firm requirements often are not available until after tactical plans and supply service plans have been completed. For transportation planners to plan concurrently with other staff agencies, often the planners must use troop strength and requirement factors that permit a reasonable estimate of transportation requirements in broad terms. These estimated transportation requirements are defined later in terms of class and service (or item) of supplies and categories of personnel or troop units.

b. Transportation planning embraces the following:

(1) Surveying existing and potential facilities for movement of troops and supplies.

(2) Selecting the available means of movement that provide the greatest flexibility, based on a study of existing and potential facilities.

(3) Planning for the maximum use of carrying capacity.

(4) Insuring that the transportation plan provides for flexibility.

6-2. Capabilities of Lines of Communications

a. The capabilities of lines of communications are quantitative statements of the ability of the lines to transport cargo or troops and usually are expressed in tons (long tons (LTON) or short tons (STON)) or troops per day. Frequently, troops per day may be equated to tons per day to provide a common unit of measure. A ton-kilometer is the actual movement of 1 ton 1 kilometer.

b. Transportation capabilities are dependent on the following:

(1) Number, lift capacities, and speed of available transportation mediums.

(2) Environmental factors (e.g., terrain, climate) influencing the operational characteristics of the transport vehicles.

(3) Distances between origins and destinations.

(4) Loading and unloading capabilities.

(5) Maintenance capabilities.

(6) Turnaround time (time required for one vehicle to complete one cycle). This is dependent on the above factors as well as on refueling time and other incidental time consumed in the normal operation of the mode.

(7) Critical density. This refers to the number of vehicles that will provide the maximum tonnage rate over a line of communications during a specified period, considering the above factors.

(8) Efficiency of management, operating, and maintenance personnel.

c. Efficiency of management is an intangible factor that may enter arithmetical calculations of capability only by experience or estimate. Such efficiency depends on the number and the skill of operating personnel, the degree of intelligent movement planning, and the effectiveness of the operating technique.

6-3. Advance Transportation Planning Factors

To obtain an estimate of transportation requirements well in advance of detailed planning, aver-

ages shown below and the tables in this section may be used.

a. Water.

(1) *Boat operation capacities per company per day (STON).*

Light amphibian company (LARC–5)	1,080
Medium boat company	720
Heavy boat company	1,440

(2) *Water terminal and beach operations.* Unless other factors govern to provide dispersion and to present less favorable targets to the enemy, plans should provide for the discharge of not less than 40 percent of tonnage over the beach and through shallow-draft facilities. As friendly capabilities decrease and as the destructive magnitude of enemy weapons increases, this over-the-shore proportion should be increased to reduce dependence on major water terminals to support military operations.

(3) *Percentage of organizations and supplies moved in assault or cargo craft in amphibious operations.* Supply, as used below, refers to accompanying supply. After the assault phase, supply is accomplished by cargo shipping only, except for emergency supply. Percentages are as follows (to be used only when assault lift is not known):

(*a*) Eighty percent of the total personnel is moved in assault naval shipping.

(*b*) Twenty percent of the total personnel is moved in cargo-type shipping.

(*c*) Sixty percent of the organizational equipment and supplies for units moved in assault naval shipping accompanies the units transported in that shipping.

(*d*) Forty percent of the organizational equipment and supplies for units moved in assault naval shipping is transported in cargo-type shipping.

(*e*) Because of space or other factors, it is sometimes impossible to move all the organizational equipment and supplies of a unit on the same ship. These supplies and equipment, in such case, may be moved on another ship of the same convoy, provided sufficient persannel from the parent unit accompany them.

b. Railways (Foreign Countries).[1]

(1) *Standard gage* (1.435 m (56½ in)).

Single track	10 trains (4,000 STON) per day in each direction (supports six divisions)
Double track	30 trains (12,000 STON) per day in each direction (supports 18 divisions)
Trainload	400 STON of cargo (20 cars at 20 tons each) or 1,000 troops (40 boxcars at 25 troops each)

(2) *Narrow gage* (0.91 m (36 in)), 1.00 m (39⅜ in), and 1.067 m (41 in).

Single track	10 trains (3,000 STON) per day in each direction
Trainload	300 STON of cargo (20 cars at 15 tons each) or 500 troops (20 boxcars at 25 troops each)

c. Highways (Supply Traffic in the Combat Zone).

(1) Highway tonnage capability is as follows:[2] [3]

Dirt	1,600 STON per day forward
Gravel	3,400 STON per day forward
Bituminous-treated	5,800 STON per day forward
Bituminous	7,300 STON per day forward
Concrete	8,400 STON per day forward

(2) A hard-surface, two-lane road of high-type asphalt, macadam, or equivalent will support a corps of four or five divisions.

(3) Two hundred and nineteen vehicles (less any available vehicles from the infantry division supply and transport battalion) are required to move the foot troops of an infantry division in one lift.

(4) A transportation light truck company (TOE 55–17), equipped with 2½-ton, 6x6, cargo trucks, with 45 trucks available making four round trips per day, can transport in local hauls 720 STON of cargo (4 tons per truck) on highway, or 3,600 passengers (20 passengers per truck) on or off highway. In line hauls, with 45 trucks available making two* round trips per day (one per 10-hour shift), the company can trans-

[1] For planning, new carload capacity (payload) is computed at 50 percent of its rated capacity. US equipment oversea box, gondolas, and flatcars, 40 tons rated capacity (standard gage); 30 tons rated capacity (narrow gage).

[2] No exact formula has been developed for determining the capabilities of various types of roads and highways because of various factors that must be considered. These capabilities are based on the following assumptions:

a. Operation is sustained.

b. Necessary road maintenance is performed.

c. Each road bears two lanes of traffic, permitting movement in both directions.

d. Standard cargo trucks, 2½-ton, 6x6, are used.

e. Two-thirds of the capability of the road is used for civil and military traffic normal to a theater of operations.

[3] Reductions for width, alinement, and weather have not been applied (para 6–40).

* One round trip per day is more likely under conditions prevailing in Southeast Asia.

port 360 STON of cargo (4 tons per truck) on highway, or 1,440 passengers (16 per truck) on or off highway. In one lift off highway, with 45 trucks available, the company can transport 112.5 STON of cargo (2½ tons per truck).

(5) A transportation medium truck company (TOE 55–18), equipped with 5-ton, 6x6, cargo trucks and 12-ton semitrailers, can transport in local hauls 1,080 STON of cargo or 4,500 troops on or off highway. When equipped with 5,000-gallon tankers, line-haul capability is 450,000 gallons a day. In local hauls, the capacity is doubled. In one lift off highway, with 45 trucks available, the company can transport 225 STON of cargo (5 tons per truck).

d. Capacities of Transportation Mediums. Table 6–1 shows capacities of various transportation mediums.

e. Transportation Requirements of an Infantry Division. Table 6–2 shows transportation requirements of an infantry division.

f. Airlift Requirements, Field Army Units. Airlift requirements for movement of field army units by US Air Force (USAF) aircraft are discussed in paragraph 6–41.

Section II. WATER

6–4. Terminals—General

a. Types. A terminal is a military or commercial facility used for the loading, unloading, and in-transit handling of cargo or personnel by any of the various means of transportation. Normally, terminals also contain other facilities essential to operation, such as maintenance facilities, classification yards, dock and lighterage facilities, management offices, storage facilities, and freight and passenger loading and unloading facilities, as required. Water terminals, including ports and beaches, and inland terminals are treated in this section. (Air terminals are treated in para 6–42.)

b. Elements of Terminal Planning. Normally, there are five steps in terminal planning.

(1) *Step 1.* Computation of the terminal workload required to support the operation, expressed as cargo tonnage and number of personnel per day.

(2) *Step 2.* Estimation of the existing terminal capacity, which is the total tonnage and personnel that can be *received, processed,* and *cleared* through the terminal in a day.

(3) *Step 3.* Estimation of construction requirements for repair and rehabilitation of existing facilities and construction of new facilities necessary to increase the existing terminal capacity to equal the required terminal workload.

(4) *Step 4.* Estimation of the equipment requirements to process the required workload through the terminal with maximum efficiency.

(5) *Step 5.* Estimation of personnel require-

Table 6–1. Capacities of Transportation Mediums

1	2	3	4	5
1 Medium		STON per day	LTON per day	Adequate to maintain—
Land:				
2 Highways (average)	Gravel	3,200	----------	2 divisions.
3 ----------	Bituminous-treated	5,800	----------	Corps of 4 divisions.
4 ----------	Concrete	8,400	----------	Field army of 8–12 divisions.
5 Railways (each way)	Single-track	4,000	3,570	3 divisions.
6 ----------	Double-track	12,000	10,700	9 divisions.
7 Pipeline	4-in (inside diameter)	910	810	3 divisions.
8 ----------	6-in	2,000	1,800	5–8 divisions.
9 ----------	8-in	3,480	3,100	1 types of field army.
10 ----------	12-in	18,300	16,430	5 types of field army.
Water:				
11 Discharge rate	Average cargo ship	720	643	1/2 division.
12 Across beaches	Per 1,000 m of beach	1,860	1,650	1 division plus.
13 Capacities of average cargo ship		10,000 MTON or 5,000 LTON (5,600 STON) of Army cargo.*		
14 Capacities of average train in theater of operations		1,000 troops or 400 STON of cargo.		

*See paragraph 6–14.

Table 6-2. Transportation Requirements of an Infantry Division

1	1 Type	2 Requirement
2	Highway	5 trans lt trk companies in addition to organic transport.
3	Air	Approximately 2,400 C-130 aircraft sorties and 123 C-5 aircraft sorties are required to air-land an infantry division. This is a lift of approximately 30,000 tons. For detailed data, see FM 61-100.
4	Amphibious operation	Average strength of an *assault division*, including shore party and other attached and supporting elements, is 25,000 men with 5,000 vehicles. If 75 percent of the vehicles of the infantry division and attached and supporting elements are loaded out with the division in assault shipping, the requirements in assault shipping for a reinforced division in an amphibious operation are—

	Type	Extended voyage (10 days)	Short voyage (2-3 days)
5	LPA (transport, attack)	6	3
6	LKA (cargo ship, amphibious)	15	6
7	LST (landing ship, tank)	26	45
8	LSD (landing ship, dock)	7	16
9	LPH (landing platform, helicopter)	4	4

ments for administration and operation in processing the required workload through the terminal.

6-5. Water Terminals (Ports)

a. General. This paragraph deals with planning data for water terminals in enemy hands that will be opened for operation as soon as the enemy is cleared. Therefore, data are based on the employment of Army personnel and ships' gear only for the unloading of ships. Appropriate allowances should be made for other circumstances, such as availability of civilian labor and terminal facilities (e.g., gantry cranes, barges, railways). Discharge of dry cargo from ships is by one of two methods—

(1) From vessels alongside a wharf onto the wharf.

(2) By lighters from a vessel anchored in the stream. Petroleum tankers are discharged at wharfside or offshore by submarine pipelines. Throughout the discussion of water terminals, the basic time period is a 20-hour day. This time generally is considered a complete round-the-clock working day in terminal operations; the other 4 hours of the day are taken up in delays inherent in the work, such as breakdowns, changing shifts, and meals. (For planning terminal discharge in forward areas when enemy action may be expected to cause work delays, 15 hours' working time per day may be estimated. Factors used may be reduced proportionately.) For general planning, the transportation terminal service company (TOE 55-117) is considered capable of discharging 720 STON per 20-hour working day. The transporation terminal transfer company (TOE 55-118) can transship 900 STON daily.

b. Water Terminal Capacity Estimation.

(1) *Factors.* Terminal throughput capacity is determined by three major factors, each of which may be expressed in terms of STON per day for planning and estimating purposes. All three factors should be estimated accurately, even though the limiting factor may be obvious. These estimates indicate the facilities where improvement effort will yield the greatest return in terms of tonnage movement capability. The three major factors are—

(*a*) Terminal reception capacity, which is the number and type of ships that can be moved into the harbor or coastal area of the terminal per day. This capacity is an estimated tonnage that can be discharged daily from ships and is based solely on an evaluation of the physical facilities of the terminal.

(*b*) Terminal discharge capacity, which is the number of ships that can be discharged in the terminal per day. This capacity is based on the equipment and terminal service units available.

(*c*) Terminal clearance capacity, which is the amount of cargo and number of personnel that can be moved through and out of the terminal per

day. This capacity is based on the transportation network and units available for moving supplies from the terminal to depots or consumers.

(2) *Checklist for water terminal capacity estimation.*

(*a*) Collect and evaluate the following data to determine water terminal reception capacity:*

1. Channel depths.
2. Obstructions.
3. Enemy air activity.
4. Enemy surface activity.
5. Enemy submarine activity.
6. Climate.
7. Weather.
8. Minefields or contaminated areas.
9. Friendly capabilities to combat obstacles.

(*b*) Collect and evaluate the following data to determine water terminal discharge (input) capacity:

1. Tactical dispersion requirements.
2. Wharf facilities.
3. Beach capabilities.
4. Discharge rates ashore.
5. Discharge rates astream.
6. Anchorage areas.
7. Extent of destruction or contamination.
8. Climate and seasons.
9. Weather and tide characteristics.
10. Cargo-handling equipment available.
11. Floating craft and equipment available.
12. Transit sheds and areas.
13. Availability of indigenous labor.
14. Space reserved for local economy.
15. Enemy activity.

(*c*) Collect and evaluate the following data; add to determine water terminal clearance (output):

1. Capacity of rail facilities.
2. Capacity of highway facilities.
3. Capacity of inland waterway facilities.
4. Capacity of pipeline facilities.
5. Capacity of air facilities.
6. Enemy activity.
7. Capacity of receiving unit's capability to receive.

(*d*) Determine water terminal throughput capacity by combining (*a*), (*b*), and (*c*) above. The most restrictive factor normally determines or limits the capacity of the terminal.

Note. Some data probably can be obtained from Navy sources; information on beaches is in paragraph 6–6; and sections II through V contain capabilities of transport services.

c. Wharf Facilities.

(1) *General.* Because only two methods of dry cargo discharge are available (*a*(1) and (2) above), planners must consider wharf facilities for alongside and lighter discharge. The Victory-type ship, having five hatches, is used as a basis for all discharge because it so closely meets the average characteristics of a normal ship. Deep-draft wharfage must be provided whenever *alongside* discharge is contemplated. Shallow-draft wharfage and anchorage areas must be given joint consideration when lighter discharge is contemplated. Factors governing wharfage are in (2) and (3) below. The term "wharf" is used throughout in its general meaning, i.e., a structure used to aid in the berthing, loading, and discharge of a vessel. Definitions of ship berthing facilities are as follows:

(*a*) *Wharf*—A structure of timber, masonry, cement, earth, or other material built along or at an angle from the shore of navigable waters so that vessels may lie close alongside to receive and discharge cargo and passengers.

(*b*) *Quay*—A wharf parrallel with the shoreline of a basin or harbor with water and accommodations for ships on one side only.

(c) *Pier*—A wharf that projects into the harbor or a basin with water and accommodations for ships on both sides.

(2) *Deep-draft wharf requirements.* A wharf is classified as deep-draft when the water alongside is deep enough to permit a fully loaded deep-draft ship to tie up alongside. The following criteria govern:

(*a*) Water depth should be not less than 10 meters at low tide. A minimum of 10 meters is used for planning purposes because it will accommodate virtually all deep-draft vessels.

(*b*) The length for a Victory-type ship is 150 meters. Each hatch (five per vessel) requires 30 meters of wharf. When wharves are more than 150 meters' long and less than the next higher 150-meter unit, the odd footage is disregarded in determining the number of berths available (e.g., 360 meters will accommodate only two ships at

* To determine terminal reception capacity, collect and evaluate data items (*a*) *1* through *9* plus data items (*b*) *1*, *6*, *7*, *9*, *14*, and *15*. When wharf and beach facilities are used for the physical accommodations of sihps, data items (*b*) *2* and *3* also should be considered.

the same time). However, the extra 60 meters can be considered for lighterage use ((3) below).

(*c*) Width should be from 18 to 27 meters for discharge on only one side of the wharf and 27 meters and more for discharge on both sides of the wharf. For planning and estimating, a wharf should be from 18 to 27 meters' wide to allow sufficient working space to discharge cargo from a ship.

(3) *Lighterage wharf requirements.*

(*a*) *General.* Any wharf may be used for lighter discharge if the water depth is sufficient for the type of lighterage being used. It may include wharfage that dries out at low tide but that can be used half the time, or 10 hours per day.

(*b*) *Length for lighter.* Warfage length for a lighter should be 30 meters. Length of wharfage more than 30 meters and less than the next higher 30-meter unit is disregarded (e.g., a 110-meter wharf will handle three lighters at the same time).

(*c*) *Width.* Width should be a minimum of 10 meters for discharge on one side and 13 meters for discharge on both sides of the pier.

d. Discharge Rates.

(1) *Per ship berth (Victory type).* Seven hundred and twenty STON per 20-hour day (five hatches at 7.2 STON per hatch per hour).

(2) *Per lighter berth.* One hundred and eighty STON per 20-hour day (1.8 STON per linear foot or 5.9 tons per linear meter of wharf per 20-hour day).

(3) *Per roll-on/roll-off berth (Comet type).* One thousand STON of cargo loaded in semitrailers per hour.

e. Anchorage Areas. Anchorage areas are defined as sheltered areas inside or near a harbor, unaffected by swell, where ships may anchor and discharge by lighter.

(1) *Depth.* The minimum depth (10 m) is dictated by the draft of the ship and the maximum (65 m) is dictated by the length and weight of the anchor chain. Installed facilities, such as mooring buoys, may modify maximum depth limitations.

(2) *Free-swinging anchorage area.* The following formula is used to determine the diameter of anchorage berths:[1] [2]

$\frac{2\ (7D + 2L)}{3}$ = diameter in yards, when—

D = depth of water in feet.
L = length of vessel in feet.

(3) *Moored bow and stern.* Variable; this method is not preferred because it can be used only in areas unaffected by tidal currents.

f. Estimate of Water Terminal Operating Personnel and Equipment.

(1) *General.* To insure maximum efficiency in terminal operations, a balanced operating force and suitable equipment must be available. Extreme care must be exercised during the planning and operational phases to insure that a balance is established and maintained. The possibility of using civilian and prisoner of war labor should not be overlooked, particularly in later expansion of the water terminal.

(2) *Operating personnel.* Operating personnel are divided into managing, or supervisory, elements (such as headquarters and headquarters company (HHC), terminal brigade and group) and functional operating units. In the latter category may be included terminal service companies or battalions, truck companies, engineer units, watercraft units, and such other units particularly suited for the functioning of any particular water terminal. Units commonly found in a water terminal include—

(*a*) HHC, transporation terminal brigade (TOE 55-111).

(*b*) HHC, transportation terminal group (TOE 55-112).

(*c*) HHC, transportation terminal battalion (TOE 55-116).

(*d*) Transportation lighterage maintenance company, direct support (TOE 55-158).

(*e*) Transportation terminal service company (TOE 55-117).

(*f*) Transportation medium boat company (TOE 55-128).

(*g*) Transportation heavy boat company (TOE 55-129).

(*h*) Transportation light amphibian company (TOE 55-138).

(*i*) Transportation floating craft general support maintenance company (TOE 55-157).

(*j*) Headquarters and headquarters detachment (HHD), transportation motor transport battalion (TOE 55-16).

[1] Diameter in yards × 0.9144 = diameter in meters.

[2] Bottom characteristics, landmarks, and underwater obstacles must be considered in selecting an anchorage site.

(*k*) Transportation light truck company (TOE 55–17).

(*l*) Transportation medium truck company (TOE 55–18).

(*m*) Transportation heavy truck company (TOE 55–28).

(*n*) Transportation terminal transfer company (TOE 55–118).

(*o*) Transportation medium amphibian company (TOE 55–139).

(*p*) Transportation watercraft teams (TOE 55–530).

(*q*) HHD, military police battalion (TOE 19–76).

(*r*) Engineer construction, utilities, and electrical power teams (TOE 5–530).

(*s*) Engineer firefighting team (TOE 5–510).

(*t*) Finance service organization (TOE 14–500).

(*u*) Medical dispensary team (TOE 8–620).

(*v*) Veterinary service team (small) (TOE 8–680).

(*w*) Labor service company (TOE 29–499).

(*x*) Signal service team (TOE 11–500).

(*y*) Army postal unit (TOE 12–550).

(*z*) Ammunition team (TOE 9–530).

g. Operating Procedures and Equipment. FM 55–57, FM 55–58, and FM 55–60 contain details on operation and capacity of terminal operating equipment.

h. Illustrative Example of Water Terminal Capacity Estimation. The following example demonstrates the recommended procedure for water terminal capacity estimation based on the steps and data outlined in the preceding praragraphs.

(1) *Situation.* A true-scale chart (fig. 6–1) of a certain harbor has been prepared for evaluation. With reference to this chart, additional information is assembled in table 6–3.

(*a*) There is sufficient area inside the harbor to anchor three ships as shown, where they can be worked continuously.

(*b*) In good weather, as many as two vessels can be anchored and worked outside the breakwater.

(2) *Problem.* To estimate the daily capacity of this terminal during good weather.

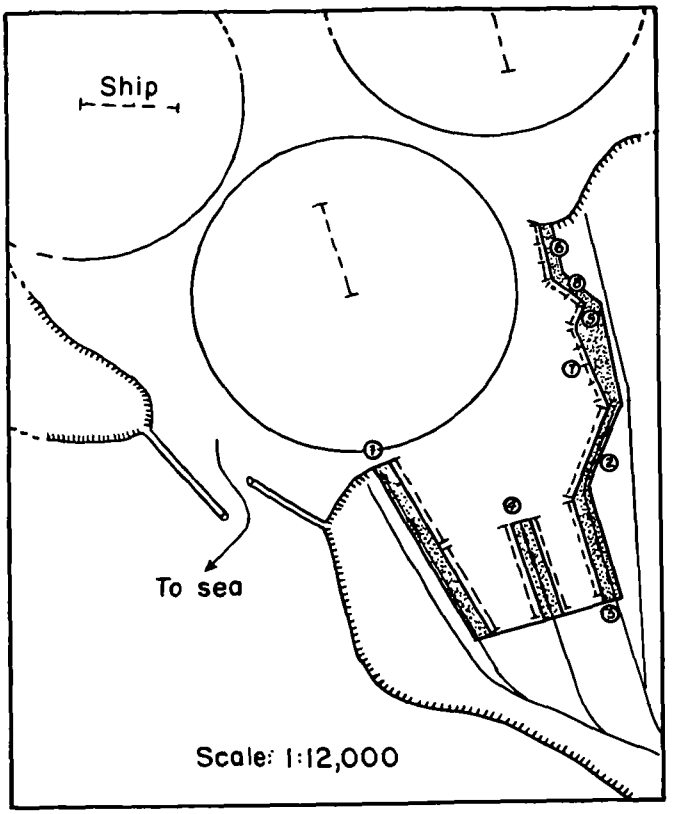

Figure 6–1. Type of harbor (drawn to scale).

(3) *Solution.* Tables 6–4 and 6–5 contain the solution.

Table 6–3. Water Terminal Description

	1	2	3	4
1	Wharf number	Length (m)	Width (m)	Minimum depth alongaide at low tide (m)
2	1	323	24	10.0
3	2	149	18	10.0
4	3	177	27	10.0
5	4	163	31	10.0 (each side)
6	5	38	17	2.5
7	6	90	18	4.5
8	7	137	23	7.0
9	8	64	18	5.0

Table 6–4. Discharge Tonnage at Deep-Draft Wharfage

	1	2	3
1	Wharf number	Vessel that can be berthed	Rate of discharge in STON per day
2	1	2 Victorys	2×720=1,440
3	2	1 Victory	1×720= 720
4	3	1 Victory	1×720= 720
5	4	2 Victorys	2×720=1,440
6	Total		4,320

Table 6–5. Discharge Tonnage to Lighterage Wharves

	1	2	3
1	Wharf number	Lighter berths	Rate of discharge in STON per day
2	5	1	1×180= 180
3	6	3	3×180= 540
4	7	4	4×180= 720
5	8	2	2×180= 360
6	Total		1,800

(*a*) *Rate of discharge from ships at anchor to lighters.* From the situation, three ships can be anchored inside the breakwater and two can be anchored and worked outside the breakwater in good weather. Therefore, in good weather, cargo can be discharged from ships to lighters at the rate of $(3 + 2) \times 720 = 3{,}600$ STON per day.

(*b*) *Resultant daily terminal capacity—summary.*

1. Discharged alongside deep-draft wharves—4,320 STON per day.

2. Discharged from lighters to wharf—1,800 STON per day.

3. Transferred from ships to lighters—3,600 STON per day.

4. Therefore, 1,800 STON per day is the maximum discharge by lighter since lighter wharfage is the limiting factor in this case.

5. Total daily terminal capacity—4,320 STON per day alongside deep-draft wharves and 1,800 STON per day by lighter, for a total of 6,120 STON per day.

(*c*) *Limitations on terminal capacity.* Requirements for dispersion and limitations on the number of ships that can be grouped in one area may restrict the use of the facility to much less than its full capacity.

(4) *Effects of bad weather.* Advance study must be made to determine the probable effect of bad weather on rate of disharge and other factors in water terminal capacity. Continuous records of daily discharge plotted against weather and surf conditions prove valuable in planning future discharge in the same and similar water terminals.

(5) *Operating personnel and equipment.* Appropriate and sufficient operating personnel and equipment must be provided to use the capacities of the physical facilities of the terminal.

6–6. Water Terminals (Beaches)

a. Amphibious Operations.

(1) *Beach capacity.*

(*a*) Each landing in an amphibious operation differs because of climatic and hydrographic conditions, variations in topographic features, and the military situation. Therefore, to develop detailed logistic planning data applicable only to beaches and their capacity to receive troops and cargo is impracticable. However, certain general planning data can be developed.

(*b*) Beach acpacity is the amount of cargo that can be discharged over a given metric beach length within a stated time interval. During the initial phases of an amphibious operation, beach capacity is limited to the beach (or beaches) over which the assault landing is made; later, if necessary, overall capacity may be increased by consolidation of beaches for more efficient operation and for the opening of sheltered unloading points in rivers or bays. Experience indicates that during the *assault* phase of an operation cargo can be landed and moved across beaches as follows (use either *1* or *2* or *1* and *2* below together in proportionate combination):

1. Average STON of cargo per day per kilometer of beach—1,860.

2. Average numbers of vehicles and personnel landed simultaneously per day per kilometer of beach—410 vehicles and 2,930 personnel.

(2) *Requirements for ship unloading.* Facilities for unloading ships offshore usually are limited to the ships' organic gear. Using ships' organic gear, stevedore labor, and lighterage provided by the task force, cargo is discharged at a prescribed rate in planned sequence. The use of balanced amounts of conventional and amphibious ship-to-shore lighterage, combined with planned and controlled ship discharge, reduces beach congestion to a minimum.

(3) *Characteristics of amphibious force vessels and craft.* (Tables 6–6 through 6–9.)

(*a*) Data in this subparagraph with reference to speed and endurance may vary under operational conditions. For the most current data, consult FM 5–15, FM 5–144, FM 60–30, and SB 700–20.

(*b*) Designating letters and names are used as follows:

1. LC (landing craft) is applied to nonoceangoing vessels of less than 60 meters' overall length designed for landing operations.

2. LS (landing ship) is applied to oceangoing vessels of more than 60 meters' overall length designed for participation in landing operations.

3. LV (landing vehicle) is applied to small equipment designed for landing operations and capable of use on land or water.

(4) *Cargo movement by wheeled amphibians.* In amphibious operations, wheeled amphibians enable direct movement of cargo from ships to shore-based dumps or transfer points.

(5) *Equipment required for operations on the beach, for beach clearance, and for operations in shore-based dumps.* Experience consistently shows a lack of sufficient shore-based equipment to receive cargo as rapidly as unloading from ships can be accomplished. Resulting bottlenecks at beaches and at beach dumps can be avoided with the addition of rough-terrain, cargo-handling equipment, particularly cranes and forklifts. Cargo-handling equipment best adapted to beach and shore-dump employment includes cranes, tractors, and trucks. Detailed characteristics of these items are outlined below.

(*a*) Cranes should be self-propelled, of medium and heavy types, with booms 40 feet long to permit lifting filled cargo nets. Each crane can handle the unloading of three landing craft, utility (LCU); eight landing craft, mechanized (LCM); or 12 landing craft, vehicle, personnel (LCVP), under normal beach operations when sufficient trucks or tractors are available to haul or drag away unloaded cargo.

(*b*) Medium and heavy tractors can tow up to nine loaded sled pallets. This type of movement from beach to dump is slow and less satisfactory than movement by truck. However, tractors are effective in dragging pallets from landing craft and within supply dumps. Additionally, tractors are invaluable for clearing the beach and dump areas of mired vehicles. From eight to 10 tractors per assault division, with six or seven on beaches and two or three in supply dumps, are usually sufficient. Several tractors assigned to a beach should be equipped with angledozers.

(*c*) Paragraphs 6–37 through 6–40 apply to trucks.

(6) *Beach service troop requirements.* Service troops are employed throughout the supply service cycle from ship unloading to segregation and storage of supplies in shore-based dumps. The multiple functions performed in this cycle require careful balancing of the types of troops employed.

b. Logistics-over-the-Shore Operations.

(1) *General.* In situations other than amphibious operations, a logistics-over-the-shore operation provides for the movement of cargo across the shore between ocean transportation and shoreside facilities. Beaches and other more difficult shoreline are used during this type of operation commensurate with the situation.

(2) *Beach capacity estimation.* The checklist in paragraph 6–5*b*(2) may be used to determine the beach capacity. Certain of these factors are not primary considerations; others must be expanded according to the location under study, which determines the weight to be given each individual factor. The following items must be investigated thoroughly to determine their effect on the operation:

(*a*) Weather—wind, fog, rainfall, temperature.

(*b*) Sea area—extent, depth of water, type of bottom, vulnerability to sea-wave action.

(*c*) Beach approaches—reefs, bars, manmade obstacles, tide, type of bottom, surf conditions, underwater gradient.

(*d*) Beach—gradient, composition, length, width, wave effect, exits.

(*e*) Hinterland—depth, concealment, transportation net capability.

(3) *Operating equipment.* The same materials-handling functions as those in a conventional port situation are performed, but more cranes and forklift trucks that can traverse sand and soft terrain are required. Amphibians should be used to relieve congestion at the water's edge and to eliminate unnecessary handling of cargo.

6–7. Inland Terminals

a. Definition. Inland terminals are those inland transit points where cargo is—

(1) Held temporarily in transit awaiting disposition instructions.

(2) Transferred from one means of transportation to another.

(3) Broken down from bulk shipments and reshipped in small units.

(4) Collected from other points to make a transportation unit for reshipment.

b. Capacity Estimation. Inland terminal capacity is the total tonnage that can be *received, processed,* and *cleared* through the terminal in any 1 day. The terminal capacity is estimated by analyz-

Table 6-6. Characteristics of Small Landing Craft

	1	2	3	4	5	6	7	8	9	10	11	12	13	14
1	LIN	Name	Symbol	Length	Beam	Capacity		Draft (loaded)		Speed loaded (knots)	Range (nm)	Crew	Weight empty (LTON)	Cargo space dimensions
						Troops or Cargo (number	(LTON)	Forward	Aft					
2	L36602	Landing craft, mechanized (Mark VI).	LCM(6)	56 ft	14 ft	120	30.7	3 ft	4 ft 8 in.	8.7	137	5	28	37 ft 6 in. by 9 ft 6 in. by 6 ft 4 in.
3	L36739	Landing craft, mechanized (Mark VIII).	LCM(8)	73 ft 6 in.	21 ft	200	53.5	3 ft	5 ft	9.0	271	6	60	42 ft 9 in. by 14 ft 6 in. by 4 ft 3 in.
4	L36876	Landing craft, utility (1466 class).	LCU	115 ft 1 in.	34 ft	300	150.0	4 ft	6 ft	6.5	700	11	180	52 ft by 29 ft 6 in. by 4 ft 6 in. 22 ft by 14 ft 4 in. by 4 ft 6 in.
5	L36945	Landing craft, vehicle, personnel.	LCVP	36 ft	10 ft	36	3.5	2 ft 2 in.	3 ft	7.0	102	4	8	17 ft 3 in. by 7 ft 5 in. by 5 ft.

Table 6-7. Characteristics of Amphibious Vehicles

1	1	2	3	4	5	6	7	8	9	10	11	12	13	14
	LIN	Name	Symbol	Length	Beam	Capacity*		Speed		Range		Crew	Weight empty (LTON)	Example of material carried
						Troops or cargo		Land (kmph)	Water (knots)	Land (km)	Water (nm)			
						(number)	(LTON)							
2	D10990	Carrier, cargo, full-tracked, amphibious.	M116	15 ft 7 in.	6 ft 10 in.	13	1.34	45.0	3.4	258	19.8	1	3.52	14 passengers (including crew).
3	L37030	Landing vehicle, tracked, engineer, model 1.	LVTE-1	39 ft 9¼ in.	12 ft 8½ in.	-------	-------	40.0	5.4	298	120.0	7	36.90	None.
4	L37118	Landing vehicle, tracked (Mark V).	LVTP-5	29 ft 8 in.	11 ft 8½ in.	34 (land) 25 (water)	8.05 (land) 5.35 (water)	45.0	6.7	301	50.0	3	31.20	105-mm howitzer with crew and 100 rounds of ammunition.
5	L37132	Landing vehicle, tracked, recovery, model 1.	LVTR-1	31 ft 9 in.	11 ft 8½ in.	-------	-------	48.0	6.0	354	57.0	3	33.50	600 cu ft available with recovery equipment removed from cargo compartment.
6	-------	Landing vehicle, tracked.	LVT(A)-5	27 ft 2½ in.	10 ft 10 in.	-------	-------	32.0	5.6	242	50.0	5	15.70	None.
7	-------	Landing vehicle, tracked (Mark XI).	LVTH-6	21 ft 8 in.	11 ft 8½ in.	-------	-------	45.0	6.7	301	45.0	5	37.80	None.
8	-------	Landing vehicle, tracked (Mark VI).	LVTP-6	21 ft 7 in.	10 ft 9 in.	20	-------	56.0	5.5	306	45.0	3	17.90	Bulk cargo.
9	L67234	Lighter, amphibious, wheeled (LARC-5).	LARC-5	35 ft	10 ft	0 (20)	4.46 (4.50)	48.3	8.6	322	40.0	2	8.48	Unitized cargo.
10	L67371	Lighter, amphibious, wheeled (LARC-15).	LARC-15	45 ft	14 ft 6 in.	0 (50)	13.40	47.5	8.2	418	45.0	3	19.00	1 loaded 2½-ton truck or 10 palletized units.
11	L67508	Lighter, amphibious, wheeled (LARC-60).	LARC-60	62 ft 6¾ in.	26 ft 7 in.	125 (200)	53.60 (89.30)	22.5	6.1	241	75.0	4	87.00	Heavy, bulky equipment.

*Figures in parentheses in columns 6 and 7 denote emergency capacity.

Note. No consideration need be given to the draft of amphibious vehicles. However, consideration must be given to the characteristics of the landing area that may affect beaching, such as mud, coral, or rock formations.

Table 6-8. Characteristics of Landing Ships

1	1 Name	2 Number of ships in class	3 Type	4 Operational range (nm)	5 Cargo capacity (LTON)	6 Troop capacity [a]	7 Cargo space (sq ft)	8 Loaded draft: Beaching	9 Loaded draft: Oceangoing	10 Length	11 Boat capacity	12 Types of loads
2	LSD (1)-----	26	Flooded well deck.	13,000	1,233-------	226	17,316	27 ft (flooded)	18 ft dry	458 ft	2 LCVP and 1 LCPL	3 LCU and 4-5 mdm trk; or 18 LCM (6) and 30 LTON cargo; or 41 LVT; or 27 LCVP; or 44 M48 tk.
3	LSD (28)-----	1	Flooded well deck.	13,000	2,410-------	353	19,800	30 ft (flooded)	19 ft dry	510 ft	3 LCVP and 1 LCPL	(With two temporary decks with ramps) 92 LVT.
4	LSD (32)-----	4	Flooded well deck.	9,500	2,500 in addition to rated well-deck load.	313	[b]24,792	33 ft 9 in. (flooded)	19 ft dry	510 ft 10 in.	3 LCVP and 1 LCPL	3 LCU; or 20 LCM (6); or 9 LCM (8); or 49 LVTP-5; or 87 LVTP-6.
5	LST (1156)---	15	Ramp, 50-ton capacity.	6,000	Normal—446; maximum landing—803; full—1,395.	395	14,000 (vehicles), 16,500 (cargo)	4 ft 11 in. fwd; 10 ft 8 in. aft	8 ft 3 in. fwd.	382 ft	3 LCVP and 1 LCPL	80 2½-ton trk, 450 LTON cargo; or 144 ¾-ton trk, 415 LTON cargo; or 233 ¼-ton trk, 530 LTON cargo; or 25 LARC-5, 445 LTON cargo.
6	LST (1153)----	2	Steam-driven; ramp, 50-ton capacity.	7,700	Normal—446; maximum landing—803; full—2,060.	197	14,340	33 ft 11 in. fwd; 11 ft 11 in. aft.	9 ft 6 in. fwd; 16 ft 3 in. aft.	382 ft	4 LCVP or 4 LCPR	21 LVT and 35 2½-ton trk; or 25 LARC-5; or 226,000 gal gasoline and 70,000 gal diesel fuel.
7	LST (542)----	148	Ramp, 50-ton capacity.	7,706	Normal—446; maximum beaching—803; full—1,212.	141	4,556 (vehicles); 9,772 (cargo)	5 ft 3 in. fwd; 10 ft aft.	7 ft 2 in. fwd; 13 ft aft.	385 ft	4 LCVP or 4 LCPR	26 2½-ton trk, 650 LTON cargo; or 45 ¾-ton trk, 675 LTON cargo; or 75 ¼-ton trk, 710 LTON cargo; or 23 LARC-5.
8	LST (1171)----	8	Ramp, 75-ton capacity (equipped with turntable).	6,048	Normal—500; maximum landing—900; full—1,850.	634	18,313	4 ft fwd; 13 ft aft.	9 ft 9 in. fwd; 16 ft aft.	442 ft	3 LCVP and 1 LCPL	19 LVTP-5 and CH-19 hel; or 27 LVTP-6 and 5 CH-19 hel; or 69 2½-ton trk; or 42 2½-ton or M48 tk.
9	LSM-------	136	Ramp, open well.	10,000	Landing—147; full—446.	56	2,900	3 ft 6 in. fwd; 7 ft 1 in. aft.	6 ft 4½ in. fwd; 8 ft 5 in. aft.	204 ft	----------	3 M48 tanks; or 5 LVT.

[a] Troop capacity may be increased by berthing troops on decks. Troops must provide own feeding facilities.
[b] Add 6,336 sq ft with mezzanine deck installed.

Notes 1. A boat space is the space weight allowed one soldier with his individual combat equipment. It s 224 or 13.5 cu ft. When computing boat spaces required for cargo, use either the weight or the space occupied, whichever is greater. Hand carts, loaded or empty, require two boat spaces.

2. Running time may be computed from the formula $T = \frac{S}{3D}$ when D = distance run in hundreds of yards, S = speed in knots (1⅛ mph), T = running time in minutes.

Table 6–9. Characteristics of Transport-Type Vessels

1	1	2	3	4	5	6	7	8	9	10	11
1	Name	Number of ships in class	Class	Type	Length (ft)	Loaded draft	Troop capacity	Cargo capacity (LTON)	Cargo space	Boat capacity	Cruising range (nm)
2	Amphibious force flagship (LCC)	16		C–2	459	24 ft				2 LCVP 4 LCPL 2 LCPR 2 LCPR	30,000
3	Attack transport (LPA 117)	57	Haskell		455	24 ft	1,565	446.0	13,000 sq ft 110,000 cu ft	2 LCM (6) 22 LCVP 1 LCPL 1 LCPR	9,000
4	Attack transport (LPA 33)	6	Payfield		492	27 ft	1,647	446.0	15,000 sq ft 160,000 cu ft	4 LCM (6) 18 LCVP 3 LCPL 2 LCPR	11,630
5	Amphibious cargo ship (LKA)	35	Montague	C–2A	459	24 ft	212	1335.0–1600.0	31,858 sq ft 291,706 cu ft	6 LCM (6) 14 LCVP 1 LCPL 1 LCPR 2 LCM (3)	12,000
6	High-speed transport (APD)	21		EX-DDE	306	13 ft	156	45.0	3,730 cu ft	2 LCVP 2 LCPR or 2 LCPL	5,100
7	Transport submarine (A–SSP)	2	Sea Lion		312		85	26.7		20 rubber landing craft.	
8	Roll-on/roll-off vehicle ship (T–AK).	1	Comet	C–4	449	22 ft		4000.0 (375 veh)	60,000 sq ft parking space and 176,500 cu ft cargo space.		13,000
9	Amphibious assault ship (LPH)	13		EX-CVE	570	28 ft 9¼ in.	1,500				16,000

ing three major factors—reception capacity, loading and unloading or transfer capacity, and clearance capacity—to ascertain which is the limiting factor and to determine the capacity as expressed in daily tonnage. The checklist below may be used for estimating inland terminal capacity.

(1) Collect the following data, when applicable; evaluate to determine inland terminal reception capacity:

(*a*) Channel depths.
(*b*) Obstructions.
(*c*) Capacity of rail facilities.
(*d*) Capacity of highway facilities.
(*e*) Capacity of pipeline facilities.
(*f*) Capacity of air facilities.
(*g*) Enemy air activity.
(*h*) Enemy surface activity.
(*i*) Climate.
(*j*) Weather.
(*k*) Contaminated areas.
(*l*) Friendly capabilities to combat obstacles.

(2) Collect the following data, when applicable; evaluate to determine loading and/or unloading or transfer capacity:

(*a*) Tactical dispersion requirements.
(*b*) Wharf and/or platform facilities.
(*c*) Discharge rates.
(*d*) Unloading rates.
(*e*) Loading rates.
(*f*) Extent of destruction or contamination.
(*g*) Climate and seasons.
(*h*) Weather and tide characteristics.
(*i*) Materials-handling equipment available.
(*j*) Cargo-handling equipment available.
(*k*) Floating craft and equipment available.
(*l*) Airfield capabilities.
(*m*) Transit sheds, yards, and areas.
(*n*) Indigenous labor available.
(*o*) Space reserved for local economy.

(3) Collect the following data, when applicable; add to determine clearance capacity:

(*a*) Capacity of rail facilities.
(*b*) Capacity of highway facilities.
(*c*) Capacity of inland waterway facilities.
(*d*) Capacity of pipeline facilities.
(*e*) Capacity of air facilities.
(*f*) Capacity of receiving unit's capability to receive.

(4) Determine inland terminal capacity by combining the factors of (1), (2), and (3) above. The most restrictive factor normally determines or limits the capacity of the terminal.

c. Estimation of Equipment. Equipment requirements are determined by analyzing the projected workload of the inland terminal in relation to the tonnages and types of cargo to be unloaded, loaded, and transferred.

d. Estimation of Personnel Requirements. Personnel requirements are determined by evaluating the mission of the inland terminal in terms of workload, equipment to be manned, and services to be performed. To insure maximum efficiency in terminal operation, a balanced force and supervisory elements must be available. The use of indigenous and prisoner of war labor should be considered.

6-8. Types and Characteristics of Inland Waterways

a. Types. Inland waterways include all navigable inland waters, such as rivers, lakes, inland channels, and canals, of sufficient depth to accommodate cargo traffic. The following are the general types into which inland waterways are grouped:

(1) Lakes.
(2) Rivers.
(3) Ship canals.
(4) Barge canals.
(5) Intracoastal waterways.

b. Characteristics. The characteristics of a waterway that must be considered in analyzing its capabilities are as follows:

(1) Restricting widths and depths of channel.

(2) Vertical and horizontal bridge clearance.

(3) Location of dams and other bars to navigation.

(4) Location of locks, dimensions, and timing.

(5) Seasonal floods and droughts, their frequency, and their duration.

(6) Normal freezeup and opening dates.

(7) Hazards to navigation, such as rapids and falls.

(8) Speed and fluctuation of current.

(9) Waterway maintenance requirements.

(10) Changes of channel.

(11) Effect of tides.

(12) Enemy activity.

6-9. Waterway Capacity Estimates

a. Limiting Factors. Factors, other than waterway characteristics, having a limiting effect on waterway capacity are—

(1) Availability of suitable barges or craft.

(2) Availability of suitable operating personnel.

(3) Availability and adequacy of terminals and terminal facilities.

b. Turnaround Time. Turnaround time is defined as the time required for a barge or craft to load, travel to its destination, unload, return to its origin, and be ready to resume loading. This factor affects waterway capacity and involves—

(1) Length of haul, taken as round-trip distance.

(2) Speed in still water—6 kilometers per hour.

(3) Speed and direction of current.

(4) Loading and unloading time—computed at 8.4 STON per barge per hour.

(5) Time consumed in locks.

(6) Operating hours per day—normally 20, allocating the remaining 4 for such functions as maintenance, refueling, and restoration.

c. Capacity Determination, Craft Available To Fill or To Exceed Waterway Capacity. When sufficient barges or craft are available to fill or to exceed waterway capacity, the daily tonnage that may be moved over the waterway is equal to one-half the number of craft per day that can be passed through the most limiting constriction (e.g., a lock, lift bridge, narrow channel) times the average net capability of the craft in use.

d. Capacity Determination, Craft Not Available To Fill or To Exceed Waterway Capacity. The following formula may be used to determine the number of tons a given number of barges can transport a given distance daily:

$$\frac{\text{Number of barges} \times \text{tons per barge} \times \text{hours of operation per day}}{\text{turnaround time in hours}} = \text{tons moved daily}$$

Example. Determine the daily tonnage that 20 barges of 270-STON capacity each can move 90 kilometers forward with no lost time in locks and negligible effect due to current.

$$\text{Travel time per barge} = \frac{90\ (\text{km}) + 90\ (\text{km})\ (\text{rd trip})}{6\ (\text{kmph})} = 30\ \text{hr}$$

$$\text{Loading and unloading time per barge} = \frac{2 \times 270\ (\text{STON cap})}{8.4\ (\text{STON per barge per hr})} = 64.3\ \text{hr}$$

$$\text{Turnaround time per barge} = 30\ (\text{hr (tvl time)}) + 64.3\ (\text{loading and unloading time}) = 94.3\ \text{hr}$$

$$\frac{20\ \text{barges} \times 270\ \text{tons per barge} \times 20\ \text{hours' daily availability}}{94.3\ \text{hours' turnaround time}} = 1{,}145.3\ \text{STON daily}$$

6-10. Floating Equipment Requirements

a. Cargo Craft. To determine the number of barges or cargo craft required to move a given tonnage a given distance forward daily, use the following formula:

$$\frac{\text{Daily tonnage} \times \text{hours' turnaround time}}{\text{tons per barge} \times \text{hours of operation daily}} = \text{number of barges required}$$

Example. Determine the number of barges having a capacity of 500 STON required to move 1,000 STON daily a distance of 150 kilometers forward, assuming no lost time in locks and negligible effects due to current.

$$\text{Travel time per barge} = \frac{150\ (\text{km}) + 150\ (\text{km})\ (\text{rd trip})}{6\ (\text{kmph})} = 50\ \text{hr}$$

$$\text{Loading and unloading time per barge} = \frac{2 \times 500\ (\text{STON cap})}{8.4\ (\text{STON per barge per hr})} = 119\ \text{hr}$$

$$\text{Turnaround time per barge} = 50\ (\text{hr (tvl time)}) + 119\ (\text{loading and unloading time}) = 169\ \text{hr}$$

$$\frac{1{,}000\ \text{tons daily} \times 169\ \text{hours' turnaround}}{500\ \text{tons per barge} \times 20\ \text{hours' daily operation}} = 16.9\ \text{barges} = 17\ \text{barges required}$$

b. Tugs and Towboats. Since a single tug or towboat normally can be used to tow more than one barge and since loading time is not a factor in tug or towboat availability, fewer tugs than barges will be required in any given situation. To determine the number of tugs or towboats required to operate a given number of barges in a given situation, use the following formula:

$$\frac{\text{Total number of barges} \times \text{turnaround time for tugs in days}}{\text{number of barges per tow} \times \text{turnaround time for barges in days}} = \text{number of tugs}$$

Example. Determine the number of tugs required to oper-

ate 400 barges, when each tow consists of five barges, turnaround time for barges is 4 days, and turnaround time for tugs is 2 days.

$$\frac{400 \text{ barges} \times 2 \text{ days' tug turnaround}}{5 \text{ barges per tow} \times 4 \text{ days' barge turnaround}} = 40 \text{ tugs required}$$

6-11. Definition of Ship-Loading Terms

a. Units of Weight.

(1) STON—2.000 pounds. Used by US ships in domestic trade.

(2) LTON—2,240 pounds. Used by US ships in foreign trade.

(3) Metric ton—2,205 pounds. Used by foreign shipping.

b. Units of Volume.

(1) Measurement ton (MTON)—40 cubic feet. Used by US ships in foreign trade.

(2) Register ton—100 cubic feet. (This tonnage is used for working out a basis to collect entry fees for the vessel and has no direct bearing on the cargo-carrying capacity of the vessel.)

c. Units of Distance and Speed.

(1) Distance (nautical mile)—6,076 feet.

(2) Speed (knot)—1 nautical mile per hour.

d. Gross Tonnage. Gross tonnage (gross register tonnage) is the entire internal cubic capacity of a ship expressed in register tons of 100 cubic feet each.

e. Net Tonnage. Net tonnage (net register tonnage) of a ship represents the cargo- and passenger-earning spaces that remain after deduction from the gross tonnage of space for the crew, powerplant, fuel, and operation of the vessel. Net tonnage is expressed in tons of 100 cubic feet each.

f. Deadweight Tonnage. Deadweight tonnage is the carrying capacity of a ship expressed in LTON and represents the difference between displacement loaded to maximum draft allowed by law and displacement light.

g. Displacement Tonnage Light. Displacement tonnage light is the weight of a ship in LTON and excludes the weight of cargo, passengers, fuel, water, stores, dunnage, and such other items necessary for use on a voyage.

h. Displacement Tonnage Loaded. Displacement tonnage loaded is the weight of a ship in LTON and includes the weight of cargo, passengers, fuel, water, stores, dunnage, and such other items necessary for use on a voyage.

i. Cargo Deadweight Tonnage. Cargo deadweight tonnage is the weight-lifting capacity of a ship in LTON remaining after deducting from the deadweight tonnage the weight of fuel, water, stores, dunnage, and such other items as may be necessary for a voyage.

j. Grain Cubic Capacity. Grain cubic capacity of a ship is the maximum space available for cargo measured in cubic feet. The measurements are taken to the inside of the shell plating of the ship or to the outside of the frames and to the top of the beams or underside of the deck plating. If a bulk cargo of grain is loaded, the grain flows in between the frames and beams and occupies the maximum space available.

k. Bale Cubic Capacity. Bale cubic capacity of a ship is the number of cubic feet of space available for cargo measured to the inside of the cargo battens, on the frames, and to the underside of the beams.

l. Lost Space. Lost space (broken stowage, stowage loss) is that cubic capacity of the ship which is not usable because of the configuration of the cargo and/or the ship. Although allowance for lost space varies substantially with individual types of cargo, the average allowance for the entire spread of military cargo amounts to the following, which is given in percentage of bale cubic capacity:

	Percentage
(1) Administrative loading	20.
(2) Commodity loading	30.
(3) Combat loading	50.
(4) Selective loading	30.

m. Stowage Factor. The stowage factor is the relationship of cubage to weight. As applied to cargo, it is the ratio of the number of cubic feet of space occupied by the cargo to the weight of the cargo in LTON. The unit in which the stowage factor is expressed is "cubic feet per LTON." In individual items or types of cargo, the stowage factor is the amount of cubic feet of space occupied by 1 LTON.

n. Vessel Stowage Factor. Vessel stowage factor = (bale cubic capacity—estimated lost space) ÷ (cargo deadweight tonnage—estimated weight of deck cargo).

(1) To determine whether weight or volume

of a specific commodity will be the limiting factor in loading a Liberty-type ship of 400,000-cubic-foot capacity after deducting lost space and with a cargo capacity tonnage (less deckload) of 8,000 LTON:

$$\text{Vessel stowage factor} = \frac{400{,}000 \text{ cu ft}}{8{,}000 \text{ LTON}} = 50 \text{ cu ft per LTON}$$

(2) Under the conditions stated above, the vessel will have its cargo space completely filled and its weight capacity used if stowed with cargo occupying 50 cubic feet to the LTON. In this example, for cargo occupying more than 50 cubic feet per LTON, volume will be the limiting factor. For cargo occupying less than 50 cubic feet per LTON, weight will be the limiting factor.

6–12. Commercial Loading Methods

a. Bulk and General Cargo Loading. Bulk and general cargo loading is the stowage of supplies to use the entire carrying capacity of a ship, disregarding segregation of cargoes either by class, technical service, or commodity. It permits maximum economy in shipping space, but requires additional labor and facilities at destination for segregation and assembly of supplies for use.

b. Multiple Port Discharge. Multiple port discharge uses bulk stowage of supplies for more than one destination, loaded to maintain availability for discharge of proper items in the order of arrival at the ship's scheduled destinations.

6–13. Military Loading Methods

Military cargo is loaded on board ships according to its intended employment at its destination. There are four types of military loading.

a. Combat Loading. Combat loading gives primary consideration to the facility with which troops, equipment, and supplies can be unloaded and ready for combat on landing rather than to economical utilization of ship space. There are three methods of combat loading. They differ mainly as to the extent of availability of troop units for landing and as to the tactical integrity of the units.

(1) *Combat unit loading.* Combat unit loading is the loading of an assault troop unit, together with its essential combat equipment and supplies, in a single ship so that the unit will be available to support the tactical plan on debarkation and to provide maximum flexibility to meet possible changes in the tactical plan.

(2) *Combat organizational loading.* Combat organizational loading is the loading of a troop unit with its equipment and supplies on the same ship so as to be available for unloading in a predetermined order. It permits debarkation of complete units and equipment, which are available for employment after assembly ashore. This method is more economical in ship space than combat unit loading.

(3) *Combat spread loading.* Combat spread loading is the loading of some of the troops, equipment, and initial supplies of a unit on one ship and the remainder on one or more ships. This method is commonly used with troop units with heavy equipment. Units so loaded are available for employment at established beachheads or ports after they assemble on land with their equipment and supplies.

b. Administrative Loading. Administrative loading is a method of loading troops and/or equipment and supplies on a ship for maximum utilization of personnel and cargo space. No consideration is given to debarkation priorities. Therefore, equipment and supplies must be unloaded and sorted before they can be used. This type of loading may be employed effectively for reinforcing and maintaining an expeditionary force and for carrying supplies and equipment for the buildup forces.

c. Commodity Loading. Commodity loading is a method of loading in which various types of cargo, such as ammunition, rations, or boxed vehicles, are loaded together so that each commodity can be discharged without disturbing the others.

d. Selective Loading. Selective loading is the arrangement and stowage of equipment and supplies aboard a ship in a manner designed to facilitate issue to units. Specific items may be discharged on call.

6–14. Nomenclature of Maritime Administration Oceangoing Vessels and Characteristics of Cargo Vessels

a. General. There is such a large variance in the cubic-carrying capacity of vessels of the same type, because of various alterations and special fittings, that the cubic feet and tonnage figures shown in tables 6–10 through 6–17 are, in most instances, minimum and apply to only one type of the designated vessels. See FM 55–15 for additional information.

b. Nomenclature of Vessels. Table 6–10 provides nomenclature of cargo vessels and includes deadweight tonnage figures and a brief description of each vessel.

c. Cargo Vessel Characteristics. Tables 6–11

through 6–17 provide data on the characteristics of cargo vessels, to include physical characteristics, capacities, and tonnage figures. The five types of ships shown in tables 6–15, 6–16, and 6–17 comprise the majority of all shipping available for military use. Note that the ships' capacities are expressed in LTON to conform with normal shipping procedures, whereas the discharge and loading capabilities of transportation terminal service companies are expressed in STON to conform with practices of other means of transportation.

Table 6–10. Nomenclature of Vessels

	1	2	3	4
1	Type	DWT (M)	Class	Remarks
		Dry cargo		
2	C1–A	8.0	AK	Designed for general cargo in world trade; steam-turbine and diesel propelled (two modifications).
3	C1–B	9.3	AK	Designed for general cargo in world trade; steam-turbine propelled (three modifications).
4	C1–M	6.0	AK	Designed for general cargo in coastal and inland waters; diesel propelled.
5	C2	10.5	AK	Designed for general cargo in world trade; steam-turbine propelled (several modifications). Modified types were used mostly as hospital ships in World War II.
6	C2–S	10.8	AK	Designed for general cargo in world trade; steam-turbine propelled (several modified types).
7	C3	12.3	AK	Principally designed as a cargo ship, can accommodate limited number of passengers; steam-turbine propelled (several modified types).
8	C3–S	13.0	AK	Designed for cargo; steam-turbine propelled.
9	C4	15.4	AK	Designed for cargo; steam-turbine propelled (two modifications).
10	C4–S	9.2–11.3	AK	Mariner class vessel, developed by Maritime Administration in cooperation with the Department of Defense to provide modern high-speed, commercial-type vessels that can be readily converted for wartime shipping.
11	C5	24.4	AKD	Designed to carry bulk cargo (ore, grain, phosphate, etc.) in world trade; steam-turbine propelled.
12	EC2 (ZEC#)	10.7	AK, APM, AKV	Liberty type designed for general cargo; steam-reciprocating-engine propelled. Several modified types, prefixed by the symbol Z, were designated as tank carriers and later modified as aircraft carriers.
13	T–ARVH–1	10.8	AV	Converted Navy seaplane tender for a floating aircraft maintenance facility (FAMF). Capable of limited supply support, designed for the maintenance of light Army aircraft at sea or in port.
14	N3	2.8	AK	Cargo carrier designed for coastal trade; steam-reciprocating-engine propelled.
15	VC2	10.8	AK	Victory type designed to carry cargo in world trade. Four types: one has 6,000-hp engine, three have 8,500-hp engines. Three are steam-turbine propelled; one is diesel propelled.
		Reefer cargo		
16	C1–M	4.7	AF	Designed as a refrigerated cargo vessel; diesel propelled.
17	C2–SU	8.6	AF	Designed as a refrigerated cargo vessel; diesel propelled.
18	R1	5.2	AF	Designed as a refrigerated cargo vessel; diesel propelled.
19	R1–D	5.0	AF	Designed as a refrigerated cargo vessel; steam turbine propelled.
20	R2–A	6.1	AF	Designed as a refrigerated cargo vessel; steam-turbine propelled.
21	R2–B	7.0	AF	Designed as a refrigerated cargo vessel; steam-turbine propelled.
		Combined passenger-cargo and transport		
22	C2–A4	9.7	AP	Designed to carry troops and cargo; steam-turbine propelled.
23	C3–P	9.6	AP	Designed to carry troops and cargo; steam-turbine propelled.
24	C4–P1	6.1	AP	Designed to carry troops and cargo; steam-turbine propelled.
25	C449	9.4	AP	Designed to carry troops and cargo; steam-turbine propelled.
26	P2	10.2	AP	Designed to carry troops and cargo; two types; one tuboelectric
		Tanker		
27	T1	1.5	AO	Designed for gasoline tanker service in coastal and inland waters; diesel propelled (four modifications).
28	T1–B2	3.9	AO	Designed to carry bulk oil in coastal and inland waters; diesel propelled.
29	T2–E	16.6	AO	Designed to carry bulk oil in world trade; turboelectric propelled (four modifications).
30	ST2–F	16.4	AO	Designed to carry bulk oil in world trade; turboelectric propelled.
31	T3	16.6	AO	Designed to carry bulk oil in world trade; steam-turbine propelled (six modifications).
32	T5	26.6	AO	Designed to carry bulk oil in world trade; steam-turbine propelled.

Table 6-11. Physical Characteristics of Vessels

1	Vessels	Deadweight tonnage (LTON)	Length (m)	(ft)	Beam (ft)	Sustained speed (knots)	Cruising range (M nm)	Draft (m)	(ft)
	Dry cargo								
2	C1-A	7,931	125	(412)	60	14.0	17	7.5	(25)
3	C1-B	9,331	127	(418)	60	14.0	16	8.5	(28)
4	C1-M	5,995	103	(339)	50	10.5	10	7.0	(23)
5	C2	10,500	140	(459)	63	15.5	16	8.1	(27)
6	C2-S	10,775	140	(459)	63	15.5	17-22	8.5	(28)
7	C3	12,343	150	(492)	70	16.5	12	8.8	(29)
8	C3-S	13,116	154	(506)	73	16.6-18.5	12-18	9.4	(31)
9	C4	15,371	158	(520)	72	17.0	11	10.0	(33)
10	C4-S	12,728	174	(572)	81	17.0-21.0	11-19	10.0	(33)
11	C5 (bulk)	24,427	178	(583)	78	16.0	11	10.3	(34)
12	C5-S-75 (gen cgo)	22,180	184	(605)	82	20.8	14	10.7	(35)
13	C5-S-77 (container)	20,020	178	(583)	78	16.0	9	9.1	(30)
14	EC2	10,750	139	(455)	62	11.0	[a] 10	8.5	(28)
15	FS [b] (7013)	560	54	(222)	32	12.0	6	3.6	(12)
16	VC2	10,700	135	(442)	57	15.5	24	8.8	(29)
	Reefer cargo								
17	C1-M	4,747	103	(339)	50	10.5	10	7.0	(23)
18	C2-SU	8,594	145	(474)	63	16.5	23	8.1	(27)
19	R1	5,226	103	(339)	50	10.5	10	7.0	(23)
20	R1-D	5,013	118	(386)	56	16.0	11	7.9	(26)
21	R2-A	6,148	139	(455)	61	18.5	7	8.1	(27)
22	R2-B	6,966	140	(460)	63	15.5	16	7.9	(26)
	Combined passenger-cargo and transport								
23	C3P	9,627	142	(495)	70	16.6	14	8.5	(28)
24	C449	9,376	167	(547)	79	20.0	----------	8.8	(29)
25	P2	8,901	190	(623)	76	19.0	11	7.9	(26)
	Tanker								
26	T1	1,450	67	(221)	37	10.0	4	3.9	(13)
27	T1B-2	3,925	99	(325)	48	10.0	6	6.3	(19)
28	T2-E	16,628	160	(524)	68	14.5	13	9.1	(30)
29	ST2-F	16,350	160	(524)	68	16.0	10	9.1	(30)
30	T3	16,582	153	(502)	68	15.5	14	9.1	(30)
31	T5	26,575	191	(627)	84	18.0	18	10.0	(33)

[a] Cruising range can be increased to 18,000 nm if deep tanks are used for fuel oil. Does not include capacity of deep tanks, of which the Liberty-type ship has 3. Deep tanks no. 1 and no. 2, with approximately 16,000-cu-ft capacity, may be used for dry or liquid cargoes if not in use for vessel voyage requirements. No. 3 deep tank is rigged for either fuel oil or bulk cargo liquids. A 5,000-bbl (703 LTON) payload can be shipped in this tank if the contemplated voyage is to be short enough that no. 3 tank will not be needed for fuel oil.

[b] FS type (vessel, freight supply) is the 222-ft vessel built for the Army. It is an oceangoing vessel but, because of its small capacity, is used principally as an inland waterway and coastwise carrier.

Table 6-12. Hold, Hatch, and Boom Data

1	1 Vessel	2 Cargo holds (number)	3 Boom capacity (LTON)	4 (Booms (number)	5 Capacity of heavy-lift rigs (LTON)	6 Hatches with heavy-lift booms (number)
	Dry Cargo					
2	C1-A	5			30	
3	C1-B	5	5	15	30	2
4	C1-M	4	[a] 3-5	12	5	2-3
5	C2	5	5	17	30	3
6	C2-S	5			30-50	
7	C3	5	5-10	21	30	5
8	C3-S	5-7			25-50	
9	C4	7	5	24	50	4-5
10	C4-S	6-7	5-10	26	50-80	4-6
11	C5 (bulk)	5			5	
12	C5-S-75 (gen cgo)	7	20	25	70	5-6
13	C5-S-77 (container)		5	2		
14	EC2	5	5	16	[b] 50	3-4
15	FS [c] (7013)	4	5	2	5	4
16	VC2	4-5	5	12	[b] 10-50	2-4
	Reefer cargo					
17	C1-M	4			5	
18	C2-SU	5			30	
19	R1	3			10	
20	R-1D	4			20	
21	R2-A	4			35	
22	R2-B	5			30	
	Combined passenger-cargo and transport					
23	C3P	7			50	
24	C449	5			20	
25	P2				10	
	Tanker					
26	T1	6			3	
27	T1B-2	7			3	
28	T2-E	9			5	
29	ST2-F	9			5	
30	T3	8			5	
31	T5	9			30	

[a] 2 3-ton booms (no. 4 hatch) and 10 5-ton booms.

[b] Some Liberty ships have a 30-ton boom at no. 2 hatch and a 15-ton boom at no. 4 hatch. Other Liberty ships have a 50-ton boom at no. 2 hatch and a 30-ton boom at no. 4 hatch. All Victory ships have a 30-ton boom at no. 4 hatch.

[c] FS type (vessel, freight supply) is the 222-ft vessel built for the Army. It is an oceangoing vessel but, because of its small capacity, is used principally as an nland waterway and coastwise carrier.

Table 6-13. Vessel Capacities

1	1 Vessel	2 Bale cubic capacity (M cu ft)[a] [b]	3 Reefer cargo (M cu ft)	4 Liquid cargo (M bbl)
	Dry Cargo			
2	C1-A	446		
3	C1-B	437		4
4	C1-M	228	10	4
5	C2	546		
6	C2-S	449-546	0-30	0-6
7	C3	672		11
8	C3-S	477-643	0-70	0-24
9	C4	712		
10	C4-S	480-750	0-273	0-11
11	C5 (bulk)	420		
12	C5-S-75 (gen cgo)	1,018	22	17
13	C5-S-77 (container)	841		
14	EC2	459		
15	FS[c] (7013)	21	10	4
16	VC2	453		5-11
	Reefer cargo			
17	C1-M	81	110	4
18	C2-SU		385	
19	R1	48	115	4
20	R1-D		195	
21	R2-A		311	
22	R2-B		344	
	Combined passenger-cargo and transport			
23	C3P	457	59	
24	C449	149	349	7
25	P2	72-109		
	Tanker			
26	T1			12
27	T1B-2	4		31
28	T2-E	15		141
29	ST2-F	15		141
30	T3	25		131
31	T5			204

[a] On-deck space or lost space in stowage is not included.

[b] Excludes liquid cargo and reefer cargo.

[c] FS type (vessel, freight supply) is the 222-ft vessel built for the Army. It is an oceangoing vessel but, because of its small capacity, is used principally as an inland waterway and coastwise carrier.

Table 6-14. Detailed Capacities Below Deck

1	1 Vessel	2 Hatch number	3 Hatch dimensions	4 Cargo capacities (MTON) Upper 'tween	5 Lower 'tween	6 Hold	7 Deep tanks
2	C1-B	1	29 ft 3 in. by 20 ft	481	398	862	----------
		2	31 ft 6 in. by 20 ft	750	742	1,438	----------
		3	31 ft 6 in. by 20 ft	845	779	1,222	----------
				[a] 102	----------	----------	----------
		4	31 ft 6 in. by 20 ft	780	1,229	--------	480
		5	31 ft 6 in. by 20 ft	574	608	----------	----------
	Total			3,532	3,756	3,522	480
3	C1-M-AV1	1	20 ft 1-1/2 in. by 19 ft 11 in	----------	601	616	----------
		2	40 ft 5 in. by 19 ft 11 in	----------	982	1,378	----------
		3	40 ft 5 in. by 19 ft 11 in	----------	901	1,179	----------
		4	9 ft by 8 ft	----------	[b] 169	113	----------
	Total			----------	2,653	3,286	----------
4	C2-S-AJ	1	26 ft 10 in. by 19 ft 10 in	602	519	947	----------
		2	32 ft 4 in. by 19 ft 10 in	804	805	1,405	----------
		3	34 ft 10 in. by 19 ft 10 in	908	968	1,514	----------
		4	29 ft 10 in. by 19 ft 10 in	902	932	1,483	----------
		5	29 ft 10 in. by 19 ft 10 in	722	--------	1,056	----------
	Total			3,938	3,224	6,405	----------
5	EC2 (Liberty)	1	33 ft 7 in. by 19 ft 10 in	----------	983	902	416
		2	34 ft 10 in. by 19 ft 10 in	----------	1,065	2,300	----------
		2	19 ft 10 in. by 19 ft 10 in	----------	597	1,495	613
		4	34 ft 10 in. by 19 ft 10 in	----------	742	1,315	----------
		5	34 ft 10 in. by 19 ft 10 in	----------	771	1,290	----------
	Total			----------	4,158	7,302	1,029
6	VC2 (Victory)	1	24 ft 11 in. by 22 ft 3 in	551	595	698	----------
		2	23 ft 11 in. by 23 ft 3 in	675	545	698	----------
		3	35 ft 11 in. by 22 ft 3 in	1,139	945	1,321	----------
		4	35 ft 11 in. by 22 ft 3 in	1,230	--------	1,277	----------
		5	23 ft 11 in. by 22 ft 3 in	1,091	--------	648	----------
	Total			4,686	2,085	4,642	----------
7	C3-S-A2	1	35 ft 9-1/2 in. by 19 ft 9-1/2 in	812	1,130	1,079	----------
		2	29 ft 9-1/2 in. by 23 ft 9-1/2 in	830	1,381	1,396	----------
		3	37 ft 3-1/2 in. by 23 ft 9-1/2 in	1,244	1,553	2,002	----------
		4	29 ft 9-1/2 in. by 23 ft 9-1/2 in	1,164	1,255	1,419	----------
		5	39 ft 9-1/2 in. by 23 ft 9-1/2 in	1,009	1,704	212	----------
	Total			5,059	7,023	6,108	----------
8	C4-S-A4	1	17 ft 9 in. by 16 ft 8 in	[c] 496	[d] 340	141	----------
		2	26 ft 10 in. by 17 ft 9 in	[c] 1,139	[d] 1,258	772	----------
		3	26 ft 10 in. by 17 ft 9 in	798	651	--------	[e] 1,084
		4	26 ft 10 in. by 17 ft 9 in	803	[d] 1,533	994	----------
		5	26 ft 10 in. by 17 ft 9 in	765	[d] 1,515	1,017	----------
		6	26 ft 10 in. by 17 ft 9 in	795	782	1,636	----------
		7	17 ft 9 in. by 17 ft 1 in	[f] 583	[f] 454	----------	----------
	Total			5,379	6,533	4,560	1,084

See footnotes at end of table.

Table 6-14. Detailed Capacities Below Deck—Continued

1	2	3	4	5	6	7
Vessel	Hatch number	Hatch dimensions	Cargo capacities (MTON)			
			Upper 'tween	Lower 'tween	Hold	Deep tanks
9 C4-S-B5	1	20 ft by 18 ft	608	293		
	2	27 ft 6 in. by 20 ft	1,160	1,128	704	
	3	27 ft 6 in. by 20 ft	702	641	603	837
	4	30 ft by 20 ft	[g] 1,626	764	1,047	
	5	30 ft by 20 ft	[g] 1,623	772	1,055	
	6	30 ft by 20 ft	[g] 1,540	794	998	
	7	20 ft 3 in. by 18 ft	95	482	358	
Total			7,354	4,874	4,765	837
10 C4-S-1a (Mariner)	1	19 ft 6 in. by 17 ft 9 in	402	453	305	
	2	29 ft 10 in. by 23 ft 10 in	731	865	637	
	3	39 ft 10 in. by 29 ft 10 in	1,050	1,454	1,284	
	4	39 ft 10 in. by 29 ft 10 in	1,006	1,500	1,528	
	5	39 ft 10 in. by 29 ft 10 in	1,044	410	401	953
	6	39 ft 10 in. by 29 ft 10 in	965		1,646	298
	7	29 ft 10 in. by 24 ft 10 in	1,627		856	
Total			6,825	4,682	6,657	1,251
11 FS freighter	1	20 by ft 16 ft			251	
	2	28 ft by 16 ft			285	
Total					536	

[a] Special cargo locker on upper 'tween level between hatches no. 3 and 4.
[b] Includes 36 MTON in trunked hatch.
[c] Includes upper deck and second deck.
[d] Includes third deck and first platform.
[e] Liquid cargo space.
[f] Includes refrigerated cargo space.
[g] Includes main 'tween deck.

6-15. Approximate Sailing Distances in Nautical Miles

Table 6-18 provides nautical-mile sailing distances from various US ports to other US ports and to ports throughout the world.

6-16. Shipping Turnaround Times

a. General. Turnaround time for similar-type ships seldom is the same between two ports, or other equidistant runs, unless sailings are carefully controlled. Assuming controlled operating conditions, a basis for turnaround times can be established for types of ships (troop or cargo) for general planning purposes.

Table 6-15. Deadweight Tonnage

1	2	3	4
1 Vessel	Maximum ship-operating supplies* (LTON)	Cargo capacity tonnage when operating supplies are maximum* (LTON)	Total (LTON)
2 Liberty	2,800	8,000	10,800
3 Victory	3,100	7,500	10,600
4 C1-B	1,850	7,250	9,100
5 C1-M-AV1	1,047	6,393	7,440
6 Mariner	4,065	9,353	13,418

*Operating supplies include fuel, water, dunnage, and ship stores. Additional payload capacity may be subsituted to a limited extent depending on length of voyage and type of cargo, which will warrant a reduction in such ship-operating supplies.

Table. 6-16. Vehicle Loading Capacities of Vessels

1	1	2	3	4	5	6	7	8	9	10	11
		Trucks, utility, 1/4-ton, 4×4 [a]		Trailers, cargo, 1-1/2-ton, 2-wheel [a]		Trucks, cargo, 3/4-ton, 2-wheel [a]		Trucks, cargo, 2-1/2-ton, 6×6, LWB		Trucks, cargo, 5-ton, 6×6, LWB	
		On wheels	Crated [b]	On wheels	Crated [b]	On wheels	Crated [b]	On wheels	Crated [b]	On wheels	Crated [b c]
2	Liberty	498	2,078	404	4,493	312	744	[d] 185	357	102	
3	Victory	512	1,983	512	4,287	331	710	193	340	114	
4	C1-B	511	1,912	491	4,133	337	684	182	328	145	
5	C1-M-AV1	314	645	261	456	167	280	111	114	61	
6	Mariner	1,181	1,740	891	1,732	665	966	364	328	229	

[a] Double the number of 1/4-ton trucks on wheels can be stowed if they are stacked. It also is estimsted that at least 35 percent more 1-1/2-ton trailers can be loaded if stowed in tandem with drawbar nested inside body of preceding trailer, provided tailgates are drop type. Regarding the other three types of vehicles, more can be stowed in the Liberty ship by double-decking; see footnote [b], table 6-17.

[b] All crated vehicles are boxed by single units except the 1-1/2-ton trailers, which are boxed by twin units.

[c] The 5-ton truck, M54, is not shipped crated.

[d] 153 1/4-ton trucks may be loaded in the bodies of 153 of these trucks. The other 32 trucks will not take jeeps because of the limiting height of the compartments in wbich stowed. As an alternative, a total of 215 trucks can be stowed by double-decking in no. 2 snd 3 holds.

Table 6-17. Detailed Vehicle Loading Capacities (Stowed on Wheels) of Vessels

1	1	2	3	4	5	6	7
1	Hatch number	Location	Trucks utility 1/4-ton 4×4	Trailers cargo 1-1/2-ton 2-wheel	Trucks cargo 3/4-ton 4×4	Trucks cargo 2-1/2-ton LWB	Trucks cargo 5-ton, 6×6 LWB
		Liberty ship					
2	1	'Tween deck	28	27	23	12	8
3	-------	Lower hold	28	24	18	10	5
4	-------	On deck	22	22	14	9	6
5	2	'Tween deck	54	44	[a] 30	21	12
6	-------	Lower hold	48	42	[a] 30	[a] 18	12
7	-------	On deck	41	36	20	13	8
8	3	'Tween deck	36	28	25	14	6
9	-------	Lower hold	32	28	22	[a] 12	6
10	-------	On deck	22	14	10	6	4
11	4	'Tween deck	41	37	27	16	8
12	-------	Lower hold	20	15	18	10	2
13	-------	On deck	31	20	16	11	8
14	5	'Tween deck	44	34	25	16	9
15	-------	Lower hold	20	11	20	6	2
16	-------	On deck	31	22	14	11	6
		Victory ship					
17	1	Upper 'tween deck	15	16	9	5	0
18	-------	Lower 'tween deck	16	18	9	6	3
19	-------	Hold	15	13	8	4	3
20	-------	On deck	14	12	6	5	4
21	2	Upper 'tween deck	29	26	17	10	4
22	-------	Lower 'tween deck	25	24	17	10	5
23	-------	Hold	21	21	14	8	3
24	-------	On deck	18	16	12	7	4
25	3	Upper 'tween deck	48	48	29	17	12
26	-------	Lower 'tween deck	46	46	30	18	12
27	-------	Hold	44	46	30	18	8
28	-------	On deck	25	29	18	13	8
29	4	'Tween deck	49	48	34	16	14
30	-------	Hold	49	49	31	18	13
31	-------	On deck	23	25	18	13	8
32	5	'Tween deck	30	31	20	12	6

See footnotes at end of table.

Table 6-17. Detailed Vehicle Loading Capacities (Stowed on Wheels) of Vessels—Continued

1	2		3	4	5	6	7
1	Hatch number	Location	Trucks utility 1/4-ton 4×4	Trailers cargo 1-1/2-ton 2-wheel	Trucks cargo 3/4-ton 4×4	Trucks cargo 2-1/2-ton LWB	Trucks cargo 5-ton, 6×6 LWB
33	-------	Hold	20	19	12	7	3
34	-------	On deck	25	25	17	6	4
		C1-B [b]					
35	1	Upper 'tween deck	21	18	12	6	4
36	-------	Lower 'tween deck	21	18	12	6	5
37	-------	Lower hold	14	13	9	4	4
38	-------	On deck	14	14	12	5	7
39	2	Upper 'tween deck	46	37	25	13	12
40	-------	Lower 'tween deck	42	37	25	15	12
41	-------	Lower hold	34	36	21	13	11
42	-------	On deck	25	21	18	12	7
43	3	Upper 'tween deck	44	42	30	17	12
44	-------	Lower 'tween deck	41	42	28	13	12
45	-------	Lower hold	41	42	28	13	9
46	-------	On deck	23	21	14	10	5
47	4	Upper 'tween deck	39	41	26	14	12
48	-------	Lower 'tween deck	36	37	24	12	10
49	-------	On deck	21	21	14	10	7
50	5	'Tween deck	23	23	15	7	5
51	-------	Hold	10	10	12	6	6
52	-------	On deck	16	18	12	7	5
		C1-M-AV1 [c]					
53	1	'Tween deck	30	23	16	10	3
54	-------	Hold	16	13	7	4	2
55	-------	On deck	20	14	13	7	4
56	2	'Tween deck	51	46	28	19	10
57	-------	Hold	51	45	28	19	10
58	-------	On deck	30	24	18	10	8
59	3	'Tween deck	44	37	27	17	9
60	-------	Hold	44	37	26	15	9
61	-------	On deck	28	22	14	10	6
		Mariner					
62	1	Upper 'tween deck	20	16	12	6	4
63	-------	Lower 'tween deck	14	10	9	4	0
64	-------	Hold	9	5	6	3	0
65	-------	On deck	20	20	11	7	4
66	2	Upper 'tween deck	37	23	22	11	7
67	-------	Lower 'tween deck	26	21	15	9	7
68	-------	Hold	15	11	9	5	2
69	-------	On deck	33	23	20	10	7
70	3	Upper 'tween deck	61	48	38	25	13
71	-------	Lower 'tween deck	52	44	32	21	13
72	-------	Hold	36	32	22	14	9
73	-------	On deck	52	42	30	20	10
74	4	Upper 'tween deck	69	46	38	20	14
75	-------	Lower 'tween deck	69	46	38	20	14
76	-------	Hold	56	44	30	16	12
77	-------	On deck	52	36	26	18	10
78	5	Upper 'tween deck	72	56	42	18	14
79	-------	Lower 'tween deck	74	58	44	[d] 18	[d] 14
80	-------	Hold	72	56	42	[d] 16	[d] 12
81	-------	Deep tank	36	28	14	6	2
82	-------	On deck	54	36	28	20	12
83	6	'Tween deck	65	47	36	18	14
84	-------	Hold	34	30	20	12	9
85	-------	Deep tank	10	4	0	0	0

See footnotes at end of table.

Table 6–17. Detailed Vehicle Loading Capacities (Stowed on Wheels) of Vessels—Continued

1	2		3	4	5	6	7
1	Hatch number	Location	Trucks utility 1/4-ton 4×4	Trailers cargo 1-1/2-ton 2-wheel	Trucks cargo 3/4-ton 4×4	Trucks cargo 2-1/2-ton LWB	Trucks cargo 5-ton, 6×6 LWB
86	-------	On deck	54	40	30	20	12
87	7	'Tween deck	42	33	23	11	7
88	-------	Hold	10	9	6	4	0
89	-------	On deck	37	27	22	12	7

[a] Based on *no* centerline bulkhead, which may not be standard equipment.

[b] Number of vehicles (except 5-ton, 6×6) in lower holds of no. 2 and 3 hatches can he doubled hy flooring over one layer of vebicles and loading a second layer directly on top. Tbe deptb of only these two bolds will permit such douhle-decking.

[c] No. 4 batch is not large enougb for vehicle loading.

[d] On nonrefrigerated type only. Approximately 3 5-tons or 4 2-1/2-tons can be loaded on tbese decks on refrigerated-type vessels.

Table 6–18. Approximate Sailing Distances in Nautical Miles

1	2	3	4	5	6	7	8
1	Ports	Ports of embarkation					
		Boston	New York	Charleston	New Orleans	Los Angeles	San Francisco	Seattle
	United States							
2	Boston	----------	200	900	2,000	[a] 5,100	[a] 5,400	[a] 6,200
3	New York	200	----------	600	1,700	[a] 4,900	[a] 5,300	[a] 6,000
4	Charleston	900	600	----------	1,220	[a] 4,500	[a] 4,900	[a] 5,600
5	New Orleans	2,000	1,900	1,200	----------	[a] 4,300	[a] 4,700	[a] 5,500
6	Los Angeles	[a] 5,100	[a] 4,900	[a] 4,500	[a] 4,300	----------	400	1,100
7	San Francisco	[a] 5,400	[a] 5,300	[a] 4,900	[a] 4,700	400	----------	800
8	Seattle	[a] 6,200	[a] 6,000	[a] 5,600	[a] 5,600	1,100	800	----------
	North Atlantic							
9	Newfoundland, St. John's	900	1,100	1,700	2,600	[a] 5,700	[a] 6,000	[a] 6,800
10	Greenland, Ivigtut	1,700	1,900	2,400	3,400	[a] 6,500	[a] 6,800	[a] 7,600
11	Iceland, Reykjavik	2,300	2,500	3,000	4,000	[a] 7,100	[a] 7,400	[a] 8,200
	Europe							
	United Kingdom:							
12	Liverpool	3,000	3,200	3,700	4,700	[a] 7,600	[a] 7,900	[a] 8,700
13	Southampton	3,000	3,200	3,600	4,600	[a] 7,500	[a] 7,800	[a] 8,600
14	Northern Ireland, Belfast	2,900	3,000	3,400	4,400	[a] 7,200	[a] 7,500	[a] 8,300
15	Norway, Oslo	3,900	4,100	4,400	5,300	[a] 8,200	[a] 8,600	[a] 9,400
	Russia:							
16	Archangel	4,000	4,200	4,800	5,800	[a] 8,800	[a] 9,200	[a] 10,000
17	Murmansk	3,700	3,800	4,400	5,400	[a] 8,500	[a] 8,900	[a] 9,700
	France:							
18	Le Havre	3,000	3,200	3,600	4,600	[a] 7,500	[a] 7,800	[a] 8,600
19	Brest	2,900	3,100	3,500	4,500	[a] 7,400	[a] 7,700	[a] 8,500
20	Bordeaux	3,000	3,200	3,700	4,700	[a] 7,600	[a] 7,900	[a] 8,700
21	Belgium, Antwerp	3,200	3,400	3,800	4,800	[a] 7,700	[a] 8,000	[a] 8,800
	Mediterranean							
22	France, Marseille	[b] 3,700	[b] 3,900	[b] 4,300	[b] 5,300	[a] 8,000	[a] 8,200	[a] 9,000
23	Italy, Naples	[b] 4,000	[b] 4,200	[b] 4,600	[b] 5,600	[a] 8,300	[a] 8,500	[a] 9,300
24	Algeria, Algiers	[b] 3,400	[b] 3,600	[b] 4,000	[b] 5,000	[a] 7,700	[a] 8,000	[a] 8,800
25	Strait of Gibraltar	3,000	3,200	3,600	4,600	[a] 7,300	[a] 7,500	[a] 8,300
	Caribbean and South Atlantic							
26	Bermuda, Hamilton	700	700	800	1,700	[a] 4,600	[a] 4,900	[a] 5,800
27	Puerto Rico, San Juan	1,500	1,400	1,100	1,500	[a] 3,900	[a] 4,300	[a] 5,100
28	Trinidad, Port of Spain	2,000	1,900	1,700	2,100	[a] 4,100	[a] 4,400	[a] 5,300
29	Brazil, Rio de Janeiro	4,700	4,800	4,700	5,200	[a] 7,300	[a] 7,600	[a] 8,400
30	Argentina, Buenos Aires	5,800	5,900	5,800	6,300	[a] 8,300	[a] 8,700	[a] 9,600
31	Panama, Panama Canal	2,200	2,200	1,600	1,400	2,900	[a] 3,200	[a] 4,000

See footnotes at end of table.

Table 6-18. Approximate Sailing Distances in Nautical Miles—Continued

1	1 Ports	2	3	4	5	6	7	8
		Ports of embarkation						
		Boston	New York	Charleston	New Orleans	Los Angeles	San Francisco	Seattle
	Middle East							
32	Egypt, Port Said	[b] 4,900	[b] 5,100	[b] 5,500	[b] 6,500	[a] 9,200	[a] 9,500	[a] 10,300
33	Arabia, Aden	[b] 6,300	[b] 6,500	[b] 6,900	[b] 7,900	[a] 10,600	[a] 10,900	[a] 11,700
34	Turkey, Istanbul	[b] 4,800	[b] 5,000	[b] 5,400	[b] 6,400	[a] 9,100	[a] 9,400	[a] 10,200
35	Iran, Khorramshahr (Persian Gulf)	[b] 8,300	[b] 8,500	[b] 8,900	[b] 9,800	[a] 12,600	[a] 12,900	[a] 13,700
	North Pacific							
36	Alaska, Dutch Harbor	[a] 7,400	[a] 7,300	[a] 6,900	[a] 6,700	[a] 2,400	2,100	1,700
37	East Russia, Vladivostok	[a] 9,500	[a] 9,300	[a] 8,900	[a] 8,700	5,000	4,600	4,400
	Middle Pacific							
38	Hawaiian Islands, Honolulu	[a] 6,900	[a] 6,700	[a] 6,300	[a] 6,100	2,200	2,100	2,400
39	Marshall Islands, Kwajalein	[a] 9,200	[a] 9,000	[a] 8,600	[a] 8,400	4,200	4,400	4,500
40	Mariana Islands, Guam	[a] 10,200	[a] 10,000	[a] 9,600	[a] 9,400	5,600	5,100	4,900
41	Japan, Yokohama	[a] 9,900	[a] 9,600	[a] 9,500	[a] 9,100	4,800	4,500	4,200
	Southwest Pacific							
42	New Guinea, Finschhafen	[a] 10,200	[a] 10,000	[a] 9,600	[a] 9,400	6,100	5,900	6,000
43	Philippine Islands, Manila	[a] 11,600	[a] 11,300	[a] 11,000	[a] 10,800	7,500	7,200	6,200
	Australia:							
44	Brisbane	[a] 9,900	[a] 9,600	[a] 9,300	[a] 9,100	6,300	6,200	6,500
45	Melbourne	[a] 10,100	[a] 9,900	[a] 9,500	[a] 9,400	7,000	7,000	7,300
46	Malaya, Singapore	[b] 9,900	[a] 10,100	[b] 10,500	[b] 11,500	7,900	7,500	7,100
	China-Burma-India							
	China:							
47	Shanghai	[a] 10,800	[a] 10,600	[a] 10,800	[a] 10,000	5,700	5,400	5,100
48	Hong Kong	[a] 11,400	[a] 11,200	[a] 10,800	[a] 10,600	6,400	6,000	5,700
	India:							
49	Bombay	[b] 8,000	[b] 8,200	[b] 8,600	[b] 9,500	[a b] 12,200	[a b] 12,600	[a b] 13,400
						10,300	9,600	9,500
50	Calcutta	[b] 9,600	[b] 9,800	[b] 10,200	[b] 11,200	[a b] 13,900	[a b] 14,200	[a b] 15,000
						9,500	9,000	8,700
51	Burma, Rangoon	[b] 9,600	[b] 9,800	[b] 10,200	[b] 11,200	[a b] 13,900	[a b] 14,200	[a b] 15,000
						9,000	8,600	8,200
	Southeast Asia							
52	Thailand, Bangkok	[a] 10,600	[a] 10,400	[a] 10,000	[a] 9,800	7,900	7,500	7,100
	South Vietnam:							
53	Saigon	[a] 10,600	[a] 12,100	[a] 11,200	[a] 11,400	7,200	6,300	6,600
54	Cam Ranh Bay	[a] 10,300	[a] 10,100	[a] 9,700	[a] 9,500	7,100	6,700	6,300
55	Da Nang	[a] 10,400	[a] 10,200	[a] 9,800	[a] 9,600	6,900	6,500	6,100

[a] Via Panama Canal.
[b] Via Strait of Gibraltar.

b. Turnaround Time Components. Turnaround time components are—

(1) Loading time at home port.

(2) Steaming time to and from destination.

(3) Unloading and loading time at destination.

(4) Unloading time at home port.

(5) Normal voyage repair and reoutfitting time.

c. Planning Factors.

(1) *Sailing distances per day.**

(*a*) *Cargo ships.*

1. Slow—240 nautical miles.

2. Fast—360 nautical miles.

* For convoy sailing speed of advance, deduct 10 percent for delays in forming convoys, zigzagging en route, etc. The 10-percent loss factor is not applicable to ships in the "fast" category since such ships normally will proceed individually.

(*b*) *Passenger ships.*

1. Slow—360 nautical miles.

2. Fast—432 nautical miles.

(2) *Time in ports per round trip for unloading, loading, voyage repairs, and reoutfitting.*

(*a*) Cargo ships—35 days.

(*b*) Troop ships—20 days.

(*c*) Tankers—10 days.

(3) *Convoys and effect on turnaround time.* A major portion of shipping may be conducted in convoy formation, the speed of which is dictated by the slowest vessel in each convoy. The planner must consider this factor in computing turnaround time for convoy or *escorted* shipping.

(4) *Convoy sailing times.* Table 6–19 provides convoy sailing times (days) from various US ports to other US ports and to ports throughout the world.

Section III. RAIL

6–17. General

a. Chapter 7 contains railway construction data.

b. Estimates of railway capacity, operating personnel, equipment, and supply requirements for a specific railway line should reflect consideration of the basic characteristics of the line, the nature of the country in which the operation is planned, and the purpose for which the planning is being done. The following items are essential to intelligent appraisal. If detailed information on these items is not available, their effects on the operation must be assumed, based on overall information of railroad operations in the country involved.

(1) Length of the line.

(2) Condition of roadbed and track.

(3) Gage of track.*

(4) Single, double, or multiple track.

(5) Weight and cross section of rail. (Where mixed rail occurs, a complete inventory of rail and compromise rail joints is desirable.)

(6) Type of ballast and depth.

(7) Type of ties (if wood, treated or untreated).

(8) Tie spacing.

(9) Axle load limitations (track and bridge).

(10) Profile of line showing location and length of ruling grade. (Any helper grade or any momentum grade that is not the ruling grade should show location and description.)

(11) Alinement of line showing location, length of minimum radius curves, and superelevation.

(12) Location and description of bridges and tunnels.

(13) Location, length, and description of passing tracks.

(14) Location, type, and quantity of fuel supply.

(15) Location, quantity, and quality of water supply.

(16) Location and capacity of yards.

(17) Location and capacity of—

(*a*) Car repair tracks and enginehouses.

(*b*) Ground support repair shops.

(18) Type and availability of motive power.

(*a*) Weight in working order.

(*b*) Expected working tractive effort.

(*c*) Age.

(19) Type and availability of rolling stock.

(*a*) Capacity, load limit, light weight, and inside cubic dimensions.

(*b*) Age.

(20) Allowable drawbar pull.

(21) Diagrams showing minimum structure, maximum unrestricted loading, and equipment gages.

(22) Signal system (train control).

(23) Train control dispatching facilities.

(24) Route junctions.

(25) Avaialbility of new equipment and repair parts.

(26) Indigenous labor resources.

(27) Determination of the attitude and loy-

---

* Track gages vary widely, starting at 0.6 meters (23⅝ in) and going to 1.676 meters (66 in). The most widely used gages are—

Broad	*Narrow*	*Standard*
1.676 meters (66 in)	1.067 meters (42 in)	.....
1.600 meters (63 in)	1.000 meters (39⅜ in)	1.435 meters (56½ in)
1.524 meters (60 in)	0.914 meters (36 in)	.....

Table 6-19. Convoy Sailing Times (Days)

1	1	2	3	4	5	6	7	8	9	10	11	12	13	14	15
	Ports	Port of embarkation*													
		Boston		New York		Charleston		New Orleans		Los Angeles		San Francisco		Seattle	
		Type of shipping													
		Troop	Cargo	Troop	Cargo	Troop	Cargo	Troop	Cargo	Troop	Cargo	Troop	Cargo	Troop	Cargo
	United States														
2	Boston	------	------	------	------	------	------	------	------	48	72	50	74	54	82
3	New York	------	------	------	------	------	------	------	------	46	70	49	74	53	80
4	Charleston	------	------	------	------	------	------	------	------	45	67	47	71	51	77
5	New Orleans	------	------	------	------	------	------	------	------	44	67	46	69	51	77
6	Los Angeles	48	72	46	70	45	67	44	67	------	------	------	------	------	------
7	San Francisco	50	74	49	74	47	71	46	69	------	------	------	------	------	------
8	Seattle	54	82	53	80	51	77	51	77	------	------	------	------	------	------
	North Atlantic														
9	Newfoundland, St. John's	------	------	27	40	30	45	36	53	55	82	57	85	61	92
10	Greenland, Ivigtut	30	45	31	47	35	52	41	61	60	89	62	92	66	100
11	Iceland, Reykjavik	34	50	35	52	38	57	44	67	63	95	65	97	70	106
	Europe														
	United Kingdom:														
12	Liverpool	38	57	39	59	43	64	49	73	66	100	68	102	73	110
13	Southampton	38	57	39	59	42	63	48	72	66	99	68	102	72	109
14	Northern Ireland, Belfast	38	56	38	57	41	61	47	70	64	96	66	99	71	106
15	Norway, Oslo	44	66	45	68	47	70	52	78	70	105	72	109	77	116
	Russia:														
16	Archangel	44	67	46	69	49	74	55	83	73	111	76	114	81	122
17	Murmansk	43	64	43	65	47	70	53	80	72	103	74	112	79	119
	France:														
18	Le Havre	38	57	39	59	42	63	48	72	66	99	68	102	72	109
19	Brest	38	56	39	58	41	62	48	71	65	97	67	101	72	108
20	Bordeaux	38	57	39	59	43	64	49	73	66	100	68	102	73	110
21	Belgium, Antwerp	39	59	41	61	43	65	49	74	67	101	69	103	73	111
	Mediterranean														
22	France, Marseille	43	64	44	66	46	69	52	78	69	103	70	106	75	113
23	Italy, Naples	44	67	46	69	48	72	54	81	71	106	72	108	77	115
24	Algeria, Algiers	41	61	42	63	44	67	50	76	67	101	69	103	73	111
25	Strait of Gibraltar	38	57	39	59	42	63	48	72	65	97	66	99	71	106
	Caribbean and South Atlantic														
26	Bermuda, Hamilton	------	------	------	------	------	------	30	45	48	72	50	75	55	83
27	Puerto Rico, San Juan	29	44	28	42	27	40	29	44	44	66	46	69	50	76
28	Trinidad, Port of Spain	32	48	31	47	30	45	33	49	45	68	47	70	52	78
29	Brazil, Rio de Janeiro	49	73	49	74	49	73	51	78	64	96	66	100	71	107
30	Argentina, Buenos Aires	55	83	56	84	55	83	59	88	71	106	73	110	78	118
31	Panama, Panama Canal	33	48	32	48	30	45	28	42	38	56	39	59	44	67
	Middle East														
32	Egypt, Port Said	50	75	50	76	54	80	60	89	76	114	78	117	83	124
33	Arabia, Aden	51	78	60	89	62	93	68	102	85	127	86	130	92	137
34	Turkey, Istanbul	49	74	50	76	53	80	59	89	76	113	77	116	82	124
35	Iraq, Basra	71	106	72	108	73	110	80	120	97	145	99	147	104	155
	North Pacific														
36	Alaska, Dutch Harbor	65	97	65	97	62	93	61	91	35	52	33	49	30	45
	Middle Pacific														
37	Hawaiian Islands, Honolulu	62	93	61	91	59	88	57	86	33	48	33	49	35	52
38	Marshall Islands, Kwajalein	76	114	75	113	72	109	71	107	46	69	47	70	48	71
39	Mariana Islands, Guam	82	124	81	122	78	118	77	116	54	81	50	76	50	75
40	Japan, Yokohama	80	121	79	118	78	117	76	113	49	74	48	71	46	69
	Southwest Pacific														
41	New Guinea, Finschhafen	82	124	81	122	78	118	77	116	57	86	56	84	57	85
42	Philippine Islands, Manila	91	136	89	133	87	131	86	129	60	90	59	88	57	86

See footnote at end of table.

Table 6-19. Convoy Sailing Times (Days)—Continued

1	1	2	3	4	5	6	7	8	9	10	11	12	13	14	15
		Port of embarkation *													
1	Ports	Boston		New York		Charleston		New Orleans		Los Angeles		San Francisco		Seattle	
		Type of shipping													
		Troop	Cargo	Troop	Cargo	Troop	Cargo	Troop	Cargo	Troop	Cargo	Troop	Cargo	Troop	Cargo
	Australia:														
43	Brisbane	80	121	78	118	77	115	76	113	59	88	58	87	60	89
44	Melbourne	82	123	80	121	78	117	77	116	62	94	62	94	65	97
45	Malaya, Singapore	80	121	82	123	83	126	90	134	68	102	66	99	63	95
	China-Burma-India														
	China:														
46	Shanghai	86	129	85	127	82	124	81	122	55	82	53	80	50	76
47	Hong Kong	90	135	88	132	86	129	85	127	59	89	57	85	55	82
	India:														
48	Bombay	69	103	70	106	72	109	78	117	94	142	97	145	102	153
										83	124	80	121	78	117
49	Calcutta	79	118	80	120	82	124	88	132	105	157	108	160	112	167
										78	117	76	113	73	110
50	Burma, Rangoon	79	118	80	120	82	124	88	132	165	157	108	160	112	167
										75	113	72	109	70	106
	Southeast Asia														
51	East Russia, Vladivostok	78	117	77	115	74	112	73	110	50	76	48	72	47	70
52	Thailand, Bangkok	85	132	84	130	82	125	79	125	66	108	65	103	64	102
	South Vietnam:														
53	Saigon	84	130	83	128	79	125	78	123	64	102	63	99	60	94
54	Cam Ranh Bay	84	130	82	127	77	123	77	123	64	102	62	97	58	92
55	Da Nang	84	130	83	128	79	125	78	123	63	99	60	94	57	90

*All turnaround times are based on the routes indicated in table 6-18 and on data given in paragraph 6-16. The turnaround times between ports, with the exception of inter-US port times, include a 10-percent safety factor for forming convoy, zigzagging, etc.

alty of local personnel. (Can guerrilla operations be expected?)

c. A military railway operating division will vary from approximately 150 to 250 kilometers, depending on existing conditions. For general planning, however, an average of 150 kilometers per railway division may be assumed.

6-18. Evaluation and Planning

Paragraphs 6-19 through 6-27 are designed primarily for wartime estimates of railway operations in a theater of operations. Analytical refinements and elaborate train density studies are difficult to justify and have been avoided because of the lack of basic information and the relative uncertainty inherent in military operations. The planner also should remember that in the early stages of a war indigenous equipment may be used to a large extent, which again may vary the expected tonnage capacity. A more detailed estimate may be made using those methods and factors contained in FM 55-20.

6-19. Train Density

Train density is the number of trains per day that can be operated in each direction over a railway line. Work trains are not included in train density. Train densities vary, depending on the condition of track; location, length. and type of passing siding; adequacy of terminal facilities; and availability of motive power and rolling stock. The densities recommended below are averages based on experence under theater of operation conditions. After air superiority has been attained and the intensity of combat has been reduced, depending on judgment of operating conditions, densities achieved maybe expected to exceed by 20 percent those presented below. (Planning capacities are discussed in para 6-3.)

Single-track lines* ____ 10 trains per day in each direction.

Double-track lines _____ 30 trains per day in each direction.

* Allows time for locomotive aervicing, running repairs, and time lost between enginehouses and yards.

Multiple-track lines ____ The extra tracks will be used to rehabilitate and maintain two tracks in operation under most theater of operation conditions.

6-20. Net Trainload

The net trainload, or payload, carried by trains on different divisions of the same line may vary greatly, depending on the conditions of operation. Experience indicates that, under normal theater of operation conditions over standard-gage railways, a single-engine net trainload of 400 STON may be used as an *average* for planning purposes; on narrow-gage railways, a single-engine net trainload of 300 STON may be used.

6-21. Net Division Tonnage

a. Net division tonnage is the net tonnage (STON) or payload that can be moved over a railway division each day.

Formula: Train density × average net trainload = net division tonnage

b. Troop, ambulance, or other special trains will replace an equal number of tonnage trains; and, when operation of such trains is anticipated, the factor for train density must be so adjusted, with the resulting decrease in net division tonnage.

6-22. Equipment Estimation

Planning data included herein are based on use of standard US Transportation Corps equipment. Allowances for use of indigenous or captured equipment should be based on judgment after evaluation of the many factors involved, such as availability of equipment, extent of expected destruction, condition of equipment, types and availability of fuel locally, availability of repair parts, and types of coupling devices. Planning data are available in FM 55-15, TM 55-206, logistic surveys, special transportation studies based on intelligence reports, reports of governments or railroads in peacetime, and from articles appearing in such publications as *Railway Gazette* (British) and *Railway Age* (US).

a. Road Locomotives. The following data are recommended for general planning. (Computation of requirements should be made for each division separately.)

(1) Average rate of travel from division terminal to division terminal—13 kilometers per hour.

(2) Time in each division terminal for steam locomotives—8 hours.*

(3) Time in each division terminal for diesel-electric locomotives—3 hours.*

(4) Reserve engines, to allow for unforeseen circumstances, such as operational peaks, heavy repairs, or destruction—20 percent.

Formula:

$$TD \times \frac{RT + TT}{24} \times 2\,RF = \frac{TD}{10} \times (RF + TT) + \text{number required for division, when—}$$

TD = train density one way

RT = average running time in hours

TT = terminal time at one end of the division

24 = number of hours in a day

RF = operational reserve factor = 1.2

b. Switch Engines.

(1) Switch-engine requirements at water and inland terminals and division terminals are dependent on the physical track layout and the number of cars to be handled at such points. The following may be used as a general guide only:

(*a*) For water and inland terminals, one per 67 cars dispatched or received per day.

(*b*) For division terminals, one per 100 cars passing per day.

(2) Requirements, as computed above, should be increased by 20 percent to allow for unforeseen circumstances, repairs, etc.

c. Rolling Stock.

(1) *Freight.*

(*a*) Requirements are computed separately for operations between major supply installations or areas on each line of communications as follows:

$$\frac{\text{Daily tonnage}}{\text{average tons per car}} \times \text{turnaroundtime} = \text{number of cars}$$

Turnaround time is the total estimated number of days required for a car from the time it is placed for loading at its point of origin, moved to its destination, unloaded, and returned to its point of origin. Such time may be computed as follows: allow 2 days at origin, 1 day at destination, and 2 days' transit time for each division (or major portion thereof) that the cars must traverse. This method, rather than an actual hour basis, is used

* Allows time for locomotive servicing, running repairs, and time lost between enginehouses and yards.

to incorporate delays due to terminal and way-station switching and in-transit rehandling of trains.

(*b*) Computations should be increased by 10 percent to meet operational peaks, commitments for certain classes of cars, and bad order cars.

(*c*) An average planning factor for net load per car may be assumed as follows:

Standard gage to broad gage	
US equipment	20 tons
Foreign equipment	10 tons
Narrow gage	
US equipment	15 tons
Foreign equipment	7½ tons

(*d*) Tank car requirements are computed separately, based on the bulk petroleum, oil, lubricant requirement and the computed turnaround time.

(2) *Passenger.*

(*a*) Passenger car requirements vary, depending on troop movement policies and rest and recuperation policies.

(*b*) Theater passenger car requirements normally are fulfilled by acquisition of local equipment, with the exception of ambulance trains.

(3) *Ambulance.* The expected medical evacuation requirements affect the demand for ambulance trains.

6–23. Characteristics of US Rolling Stock

Table 6–20 contains the characteristics of US rolling stock.

6–24. Outsize Equipment

Outsize equipment is that which, because of extreme dimensions (height, width, length) or extreme weight, or combinations thereof, requires special handling under restricted speeds and/or on special cars. The planner should recognize that more of this type of equipment is being designed, and he should attempt to build a train of these outsize loads for a single movement rather than to place a few in each train moving on the line of communications. Such movements require special meeting points on adjacent lines of a double track and retards returning traffic and trains following in the same direction.

6–25. Personnel Requirements

The basic unit of railway organization in a theater of operations is the transportation railway battalion. This battalion operates and maintains a division of railway that is similar to a US commercial railroad organization. Military organizations of administrative and operating personnel are designed to fulfill the operating personnel needs of the basic units (railway divisions) and the administrative personnel needs of the several divisions comprising a railway system. Personnel requirements are therefore estimated by division.

6–26. Supervisory, Operating, and Maintenance Organizations

a. Supervisory. The following organizations are supervisory:

(1) HHC, transportation railway brigade (TOE 55–201). This unit commands and supervises three or more transportation railway groups in a large landmass theater.

(2) HHC, transportation railway group (TOE 55–202). This unit provides command, staff planning, and supervision of operations of from two to six transportation railway battalions and attached supporting units, as required.

b. Operating. The transportation railway battalion (TOE 55–225) is an operating organization.

(1) Requirements are estimated on the basis of the number of traincrews required. The 50 traincrews provided in the operating company of the battalion are the controlling factor. When augmentation is necessary, additional crews are provided from TOE 55–520. This augmentation does not upset the equilibrium of the battalion for carrying out its assigned function, provided the normal length of line to be operated is not exceeded or motive power added does not exceed the capabilities of the equipment maintenance company. Normally one transportation railway battalion is assigned to a railway division (usually from 145 to 252 kilometers of main track).

(2) In estimating traincrew requirements, the following basis may be used:

(*a*) For road operations: one crew per train per day (moving in either direction) per division.

(*b*) For switching: two crews per switching engine in operation. (For general planning, reserve switch engines are not considered.)

(*c*) For road operations and switching: assume 80-percent availability of assigned crews to allow for sickness and other absences.

c. Maintenance. The following supply and maintenance command companies provide general support maintenance:

Table 6–20. Characteristics of US Rolling Stock

1	1 Type of car	2 Gage	3 Capacity: Cargo space	4 Capacity: Tons	5 Tare weight (empty tons)	6 Inside dimensions: Length	7 Inside dimensions: Width	8 Inside dimensions: Height
	Foreign service							
2	Box (30-ton)	Narrow	1,588 cu ft	30	13.6	34 ft 5½ in.	7 ft ¾ in.	6 ft 4 in.
3	Box (40-ton)	Std to broad	2,520 cu ft	40	18.5	40 ft 6 in.	8 ft 6 in.	6 ft 5⅝ in.
4	Flat (30-ton)	Narrow	247 sq ft	30	10.9	34 ft 5⅞ in.	7 ft 2 in.	
5	Flat (40-ton)	Std to broad	351 sq ft	40	14.5	40 ft 9 in.	8 ft 7¼ in.	
6	Flat (80-ton)	Std to broad	447 sq ft	80	33.3	46 ft 4 in.	9 ft 8 in.	
7	Flat, depressed center (70-ton)	Std to broad	193 sq ft	70	41.5	50 ft 7 in.	9 ft 8 in.	
8	Gondola, high-side (30-ton)	Narrow	946 cu ft	30	13.0	34 ft 5 in.	6 ft 10½ in.	4 ft.
9	Gondola, high-side (40-ton)	Std to broad	1,680 cu ft	40	18.0	40 ft.	8 ft 8¾ in.	4 ft.
10	Gondola, low-side (30-ton)	Narrow	356 cu ft	30	12.1	34 ft 6 in.	6 ft 10½ in.	1 ft 6 in.
11	Gondola, low-side (40-ton)	Std to broad	500 cu ft	40	16.0	40 ft 4½ in.	8 ft 3¼ in.	1 ft 6 in.
12	Tank, POL (6,000-gal)	Narrow	6,000 gal	20	16.0			
13	Tank, POL (10,000-gal)	Std to broad	10,000 gal	35	19.0			
	Domestic service							
14	Box (50-ton)	Std	3,975 cu ft	50	23.0	40 ft 6 in.	9 ft 2 in.	11 ft.
15	Flat (50-ton)	Std	454 sq ft	50	25.5	43 ft 3 in.	10 ft 6 in.	
16	Flat (70-ton)	Std	513 sq ft	70	27.0	49 ft 11 in.	10 ft 3 in.	
17	Flat (100-ton)	Std	562 sq ft	100	35.0	54 ft	10 ft 6¼ in.	
18	Gondola, high-side (50-ton)	Std	1,770 cu ft	50	25.0	41 ft 6 in.	9 ft 6 in.	4 ft 6 in.
19	Gondola, low-side (50-ton)	Std	1,184 cu ft	50	23.0	41 ft 6 in.	9 ft 6 in.	3 ft.
20	Tank, POL (10,000)	Std	10,000 gal	35	23.0			

Note. Average payload for each type of car, except tank cars, is 50 percent.

(1) Diesel-electric locomotive repair company (TOE 55-247). This unit performs general support maintenance on diesel-electric locomotives and locomotive cranes. Capabilities include general support (heavy) maintenance on 25 diesel-electric locomotives and/or locomotive cranes per month.

(2) Transportation railway car repair company, general support (TOE 55-248). This unit performs general support (heavy) maintenance on railway cars. General support capabilities include maintenance of 600 railway cars per month. This unit also has a supply mission. It receives, stores, and issues 8,000 line items of railway supplies and repair parts per month in support of from four to six transportation railway battalions.

6-27. Supply

a. Fuel and Lubricants. Fuel and lubricants are discussed in paragraphs 5-6 and 5-7.

b. Repair Parts. Estimated repair part requirements for motive power and rolling stock are 1.5 STON per month for each train per day (moving in either direction) over each division.

6-28. Space Requirements for Troop Loading on US Equipment (Continental United States Only)

a. Capacities of standard US passenger cars are given in table 6-21.

b. For planning and staff training, the following assumptions may be used:

(1) Coaches, average—54 troops with individual equipment.

(2) Sleeping cars, average—27 troops in a standard pullman.

c. A type of passenger train for long-distance moves consists of seven day coaches, 14 sleeping cars, two kitchen cars, two diner cars, and one or two baggage cars. Mixed trains, which carry both personnel and freight (vehicles, artillery, and equipment), are authorized only for reasons of military necessity. They are, at times, desirable from a tactical and organizational standpoint. Such moves are not economical when passenger equipment is in short supply because mixed trains move at freight speed and equipment is not used fully.

Table 6-21. Capacities of Standard US Passenger Cars

	1	2	3	4
1	Dimensions and capacity	Day coach	Tourist sleeper	Standard sleeper
2	Length in feet	65-75	65-75	65-80
3	Number of sections	None	13-16	12-16
	Maximum seating:			
4	2 men to each double seat.	60-70	52-64	53-64
5	3 men to each 2 double seats.	45-52	39-48	40-48
	Sleeping capacity:			
6	2 men per berth (maximum)	None	52-64	53-64
7	3 men per section	None	39-48	36-48
8	1 man per berth	None	26-32	27-32

6-29. Kitchen, Diner, and Baggage Cars

In assembling a passenger train, kitchen, diner, and baggage cars are assigned on the basis of one per 250 men or fraction thereof.

6-30. Loading of Equipment and Supplies

a. The amount of headquarters, kitchen, and maintenance equipment varies somewhat in all units. For planning, allow 20 STON per company or equivalent unit.

b. For company or larger unit movements, container express (CONEX) containers should be used wherever practicable for consolidation and security of organizational equipment and baggage.

c. The stenciled capacity of a car does not mean that the car always can be loaded to its authorized load limit. For many types of cargo, the cubic capacity of the car is reached before the load limit. Such low-density items include class I supplies, clothing and blankets, tentage, and motor vehicle parts.

d. In loading high-density items, the load limit of the car will be reached before the cubic capacity is met. Examples of high-density items are ammunition, barbed wire, corrugated iron, cement, rifles in chests, telephone wire, and engineer tools.

6-31. Flatcar Requirements

a. Flatcar requirements (table 6-22) are based on maximum utilization of each car. The following flatcars should be used for planning purposes:

40.0-foot	50-ton
46.0-foot	50-ton
50.5-foot	50-ton
56.0-foot	200-ton

Computation should not be restricted to cars of one length. From 1 to 2 feet per car normally is an adequate allowance for vehicle tiedowns and bracing.

b. Maintenance of unit integrity requires 10-percent additional flatcars over those required for separate loading. Freight trains moving heavy equipment, such as tanks, artillery, vehicles, and engineer equipment, seldom exceed 65 cars or 1,200 tons.

6–32. Division Rail Moves

Tables 6–23 through 6–28 show the approximate rail equipment needed to move the personnel and authorized vehicles, equipment, weapons, and supplies for armored, infantry, infantry (mechanized), airborne, and airmobile division bases and their maneuver battalions. Assumptions contained in paragraphs 6–28 through 6–31 have been used. The specfic types of equipment to be used and the detailed makeup of each train must be worked out between the unit transportation officer and the installation transportation officer (continental United States (CONUS) movements) or the transportation officer in the area in which the movement originates (theater of operation movements).

Table 6–22. Recommended Loading of Types of Vehicles and Equipment on Flat Railcars

1	1	2	3	4
1	LIN	Item	Flatcar (length in ft)	Unit per car
2	D11048	Carr, cgo, ammo	40.0	2
3	D11401	Carr, comd and recon	40.0	2
4	D11538	Carr, CP	40.0	2
5	D12086	Carr, pers	40.0	2
6	E02807	Chassis, tlr, 2-1/2-ton	40.0	2
7	E02670	Chassis, tlr, 3-1/2-ton	40.0	2
8	E56577	CEV, full-tracked	40.0	1
9	E39241	Crane, wheel-mtd, 5-ton	40.0	1
10	F39378	Crane, wheel-mtd, 20-ton	40.0	1
11	H56391	Fttg equip, trk-mtd	40.0	1
12	J35561	Genr set, tlr-mtd, PU-407	40.0	4
13	J35698	Genr set, tlr-mtd, PU-408	40.0	4
14	J41178	Genr set, tlr-mtd, PU-209/MR	40.0	4
15	J41315	Genr set, tlr-mtd, PU-294/G	40.0	4
16	J41589	Genr set, tlr-mtd, PU-322/G	40.0	4
17	J41931	Genr set, tlr-mtd, PU-456/G	40.0	4
18	J74852	Grader, rd, mtz	56.0	2
19	J93997	Guidance and launching sta	46.0	2
20	J96694	Gun, ADA, SP, 20-mm, XM163	46.0	2
21	J96819	Gun, twin 40-mm, SP, M42	40.0	1
22	J97230	Gun, 175-mm, SP	40.0	1
23	K56981	How, 8-in, SP	40.0	1
24	K57529	How, 105-mm, towed	46.0	2
25	K57666	How, 155-mm, SP	46.0	2
26	K57803	How, mdm, 155-mm, towed	40.0	1
27	K90188	Instl rep shop, trk-mtd	40.0	1
28	L45534	Lchr, rkt, 2-1/2-ton, 762-mm, trk-mtd	40.0	1
29	L76625	Loader, scoop-type, 2-1/2-cu-yd	46.0	2
30	L85146	Lub and svc unit, tlr-mtd	50.5	3
31	M68076	Mort, 81-mm, SP, full-tracked	40.0	2
32	M68145	Mort, 107-mm, SP, full-tracked	40.0	2
33	P11866	Pneumatic tool and compressor outfit, tlr-mtd	40.0	2
34	R50543	Recov veh, full-tracked, lt, tlr-mtd	40.0	1
35	R50680	Recov veh, full-tracked, mdm	40.0	1
36	S70243	Stlr, low-bed, wkr, 12-ton	40.0	1
37	S70517	Stlr, low-bed, 25-ton, 4-wheel	40.0	1
38	S70791	Stlr, low-bed, 60-ton, 8-wheel	50.5	1

Table 6-22. Recommended Loading of Types of Vehicles and Equipment on Flat Railcars—Continued

1	1 LIN	2 Item	3 Flatcar (length in ft)	4 Unit per car
39	S72024	Stlr, stake, 12-ton, 4-wheel	40.0	1
40	S72983	Stlr, tk, fuel, 5,000-gal	40.0	1
41	S73394	Stlr, tk transporter, 50-ton	46.0	1
42	S73805	Stlr, van, 6-ton, 4-wheel	40.0	1
43	S74079	Stlr, van, cgo, 12-ton	40.0	1
44	S74490	Stlr, van, expansible, 6-ton	40.0	1
45	T10138	Shop equip, contact, maint, trk-mtd	40.0	2
46	T10275	Shop equip, elec rep, trk-mtd	40.0	1
47	T10275	Shop equip, elec rep, stlr-, tlr-mtd	40.0	1
48	T10412	Shop equip, elec rep, stlr-mtd	40.0	1
49	T13152	Shop equip, org rep	40.0	1
50	T21235	Shop set, acft maint, stlr-mtd, A-1, trk-mtd	40.0	1
51	T21372	Shop set, acft maint, stlr-mtd, A-2, trk-mtd	40.0	1
52	V12826	Tk, cbt, full-tracked, 76-mm	40.0	1
53	V13100	Tk, cbt, full-tracked, 105-mm	40.0	1
54	W76816	Trac, full-tracked	40.0	1
55	W89557	Trac, wheeled, whs	40.0	3
56	W94030	Tlr, ammo, 1-1/2-ton, 2-wheel	50.5	3
57	W94441	Tlr, util, 2-1/2-ton, 2-wheel	40.0	5
58	W95263	Tlr, cable reel, 3-1/2-ton	46.0	3
59	W95400	Tlr, cgo, 1/4-ton, 2-wheel	46.0	4
60	W95537	Tlr, cgo, 3/4-ton, 2-wheel	46.0	3
61	W95811	Tlr, cgo, 1/2-ton, 2-wheel	46.0	3
62	W96907	Tlr, flatbed, 10-ton, 4-wheel	40.0	1
63	W98825	Tlr, tk, water, 400-gal	46.0	3
64	X38639	Trk, amb, 1/4-ton	46.0	3
65	X38776	Trk, amb, 3/4-ton	40.0	2
66	X38951	Trk, amb, 1-1/4-ton	46.0	2
67	X39735	Trk, cgo, 3/4-ton	40.0	2
68	X39872	Trk, cgo, 3/4-ton, WWN	40.0	2
69	X39883	Trk, cgo, 1-1/4-ton	46.0	2
70	X40009	Trk, cgo, 2-1/2-ton	50.5	2
71	X40146	Trk, cgo, 2-1/2-ton, WWN	50.5	2
72	X40283	Trk, cgo, 2-1/2-ton, LWB	56.0	2
73	X40831	Trk, cgo, 5-ton, LWB	56 0	2
74	X40968	Trk, cgo, 5-ton, LWB, WWN	56.0	2
75	X43434	Trk, dump, 2-1/2-ton, WWN	46.0	2
76	X43845	Trk, dump, 5-ton, WWN	50.5	2
77	X48846	Trk, lift, fork, 4,000-lb	40.0	10
78	X48914	Trk, lift, fork, 6,000-lb	40.0	8
79	X55627	Trk, platform, util, 1/2-ton	40.0	3
80	X56586	Trk, stake, 5-ton	40.0	1
81	X58271	Trk, tk, 2-1/2-ton	50.5	2
82	X57408	Trk, tk, 2-1/2-ton, WWN	40.0	1
83	X59189	Trk, trac, 2-1/2-ton	46.0	2
84	X59326	Trk, trac, 5 ton	46.0	2
85	X59463	Trk, trac, 5 ton, WWN	50.5	2
86	X59600	Trk, trac, 10-ton	40.0	1
87	X59874	Trk, trac, 10-ton WWN	40.0	1
88	X60696	Trk, trac, wkr, 5-ton	40.0	1
89	X60833	Trk, util, 1/2-ton	50.5	3
90	X61244	Trk, util, 1/4-ton, 4x4	50.5	3
91	X61929	Trk, van, expansible, 2-1/2-ton	40.0	1
92	X62237	Trk, van, expansible, 5-ton	40.0	1
93	X62340	Trk, van, shop, 2-1/2-ton	50.5	2
94	X62477	Trk, van, shop, 2-1/2-ton, WWN	40.0	1
95	X63025	Trk, wkr, crane, 2 1/2-ton	40.0	1

Table 6-22. Recommended Loading of Types of Vehicles and Equipment on Flat Railcars—Continued

1	1 LIN	2 Item	3 Flatcar (length in ft)	4 Unit per car
96	X63162	Trk, wkr, 2-1/2-ton, WWN	40.0	1
97	X63299	Trk, wkr, 5-ton, WWN	40.0	1
98	Y35486	Water purification equip set, trk-mtd	40.0	1
99	Y48255	Welding shop, tlr-m*d	46.0	3
100	Z32391	GM sys, AD, Chaparral, XM48	56.0	2

Table 6-23. Rail Movement—Armored Division Base (TOE 17H)

1	1 Unit	2 TOE	3 Personnel	4 Flatcars	5 Boxcars	6 Coaches	7 Pullmana	8 Kitches	9 Diners
2	HHC	17-4H	184	34	4	4	7	1	1
3	MP co	19-27H	191	34	4	4	6	1	1
4	Div avn co	17-87H	101	30	4	2	4	1	1
5	Sig bn	11-35H	660	122	15	12	21	3	3
6	Engr bn*	5-145H	989	255	29	19	37	4	4
7	3 bde HHC (each)	17-42H	115	29	4	3	4	1	1
8	Armd cav sqdn	17-105H	850	137	17	16	32	4	4
9	Div arty	6-300H	2,768	515	63	54	96	11	11
10	DISCOM	29-21H	2,290	559	66	43	85	10	10
11	ADA bn, CHAP/Vulcan, SP	44-325H	554	83	15	11	25	3	3
12	Total		8,932	1,856	229	174	325	41	41

*When equipped with mobile assault bridge.

Table 6-24. Rail Movement—Infantry Division Base (TOE 7H)

1	1 Unit	2 TOE	3 Personnel	4 Flatcars	5 Boxcars	6 Coaches	7 Pullmans	8 Kitchens	9 Diners
2	HHC	7-4H	177	31	4	3	6	1	1
3	MP co	19-27H	191	34	4	4	7	1	1
4	Cbt avn bn	7-75H	330	46	6	7	12	2	2
5	Sig bn	11-35H	660	122	15	12	24	3	3
6	Engr bn*	5-155H	781	233	27	15	21	4	4
7	3 bde HHC (each)	7-42H	102	27	3	2	3	1	1
8	Armd cav sqdn	17-105H	850	137	17	16	29	4	4
9	Div arty	6-100H	2,663	492	60	50	99	10	10
10	DISCOM	29-1H	2,122	464	55	40	79	9	9
11	ADA bn, CHAP/Vulcan, SP	44-325H	554	83	15	11	25	3	3
12	Total		8,634	1,723	212	164	311	40	40

*When equipped with mobile assault bridge.

6-33. Movement of Troop Units on Foreign Railways

a. The capacities of railroads and railway equipment fluctuate widely throughout the nations of the world. Experience in Europe during World War II indicates that under the pressure of all-out war there are few, if any, places in the world where complete troop units can be moved by rail at the same time that the rail net is supplying a major force. A compromise policy was developed in which tracked vehicles and foot troops were moved by rail whenever facilities were available and wheeled vehicles, with their normal towed loads, proceeded on highways.

b. Assumed capacities of foreign rail facilities are indicated in (1), (2), and (3) below.

(1) *Freight cars.*

Well flats	50 tons
Medium flatcars	25 tons
Small flatcars	12 tons
Boxcars	10 tons or 25 troops

(2) *Passengers.*

Coaches*	40 troops
Sleeping cars*	32 troops

(3) *Trains.*

Maximum length	40 cars
Maximum net load	400 tons
Maximum troops	1,000 (using boxcars)

* In the forward areas, passenger equipment seldom is used for unit moves. The limited available equipment may be used for movement of casuals, convalescents, and redeployment groups or for leave trains.

Table 6-25. Rail Movement—Infantry Division (Mechanized) Base (TOE 37H)

1	1 Unit	2 TOE	3 Personnel	4 Flatcars	5 Boxcars	6 Coaches	7 Pullmans	8 Kitchens	9 Diners
2	HHC	37-4H	184	34	4	4	7	1	1
3	MP co	19-27H	191	34	4	4	6	1	1
4	Div avn co	37-87H	101	30	3	2	4	1	1
5	Sig bn	11-35H	660	122	15	12	21	3	3
6	Engr bn*	5-145H	989	255	29	19	37	4	4
7	3 bde HHC (each)	37-42H	115	29	4	3	4	1	1
8	Armd cav sqdn	17-105H	850	137	17	16	32	4	4
9	Div arty	6-300H	2,768	515	63	54	96	11	11
10	DISCOM	29-11H	2,245	540	63	42	83	10	10
11	ADA bn, CHAP/Vulcan, SP	44-325H	554	83	15	11	25	3	3
12	Total		8,887	1,837	225	173	323	41	41

*When equipped with mobile assault bridge.

Table 6-26. Rail Movement—Airborne Division Base (TOE 57G)

1	1 Unit	2 TOE	3 Personnel	4 Flatcars	5 Boxcars	6 Coaches	7 Pullmans	8 Kitchens	9 Diners
2	HHC	57-4G	136	21	3	3	5	1	1
3	MP co	19-67G	156	16	2	3	5	1	1
4	Cbt avn bn	1-55G	353	27	5	7	11	2	2
5	Sig bn	11-215G	549	81	10	10	18	2	2
6	Engr bn	5-25G	578	99	12	11	18	3	3
7	3 bde HHC (each)	57-42G	122	17	2	3	5	1	1
8	Armd cav sqdn	17-75G	634	83	11	12	20	3	3
9	Div arty	6-200G	1,626	249	31	30	52	7	7
10	DISCOM	29-51G	1,680	182	26	33	67	8	8
11	ADA bn, CHAP/Vulcan, towed	44-425T	351	37	15	7	13	2	2
12	Total		6,429	846	121	125	224	32	32

Table 6-27. Rail Movement—Airmobile Division Base (TOE 67T)

	1	2	3	4	5	6	7	8	9
1	Unit	TOE	Personnel	Flatcars	Boxcars	Coaches	Pullmans	Kitchens	Diners
2	HHC	67-2T	156	25	3	3	5	1	1
3	MP co	19-87T	156	17	2	3	5	1	1
4	Cbt avn gp	1-100T	1,992	200	29	37	63	8	8
5	Sig bn	11-205T	336	45	7	6	11	2	2
6	Engr bn	5-215T	620	85	12	12	20	3	3
7	3 bde HHC (each)	67-42T	169	19	3	5	9	1	1
8	Cav sqdn	17-95T	770	76	14	14	24	3	3
9	Div arty	6-700T	1,848	136	36	34	58	8	8
10	DISCOM	29-41T	3,195	243	50	60	103	13	13
11	Total		9,580	884	162	184	316	42	42

Table 6-28. Rail Movement—Combat Units

	1	2	3	4	5	6	7	8	9
1	Unit	TOE	Personnel	Flatcars	Boxcars	Coaches	Pullmans	Kitchens	Diners
2	Inf bn, inf div	7-15H	818	69	15	16	31	3	3
3	Inf bn, abn div	7-35G	812	54	9	15	25	3	3
4	Inf bn (mech), armd, inf, and inf (mech) div	7-45H	891	73	16	17	33	4	4
5	Inf bn, ambl div	7-55T	767	15	14	18	24	3	3
6	Tk bn, armd, inf, and inf (mech) div	17-35H	564	92	11	11	21	2	2

6-34. Troop Movement Planning

a. Scales. In training and preparing for movement, all units will become familiar with the use of railway car loading scales or equivalent scales, tables, or templates (para 6-35).

b. Rail Movement Table. All units will maintain tables for movement by *all means* of transportation. A sample rail movement table is provided in table 6-29. The format can be adapted for use by any type of unit. The division transportation section and lower units maintain the rail movement table in compliance with AR 220-10. The table is revised to reflect actual strength and equipment on hand on receipt of movement orders. Organizational equipment and checkable baggage must be listed separately.

c. Other Types of Tables. When the rail movement has been ordered and the approximate types of equipment have been requested, each unit prepares the following:

(1) Train consist table (table 6-30).

(2) Entraining table (table 6-31).

(3) Individual train loading plan (fig. 6-2).

d. Alert Time (CONUS). An alert is not an order, and rail carriers do not move equipment into position for loading on an alert. It requires 96 hours after request for routing has been placed with the Military Traffic Management and Terminal Service to start loading a division, assuming that no equipment is available at the installation.

e. Loading Time (CONUS). Passenger trains require 1 hour for loading. Baggage cars for personal baggage and baggage cars for kitchen purposes are spotted in advance. The time required to load troop units with all vehicles and equipment on freight trains varies with the training status of the unit and the conditions at the loading point. Six hours is used for planning purposes.

6-35. Railway Car Loading Templates

In preparing loading plans and determining flatcar requirements, car loading templates are helpful. The first step is to prepare templates to a suitable scale (1:25 is recommended) for each item of equipment to be loaded. The transportation officer, or representative of the commercial carrier, can provide dimensions of the usable loading space of the various pieces of rolling stock that can be furnished. A diagram of the usable loading space then is drawn to the same scale as

Table 6-29. Sample Rail Movement Table

1	1	2	3	4	5	6	7	8	9	10	11	12	13	14	15	16	17	18	19	20	21	22	23	24	25	26
			Strength		Organizational equipment		Checkable baggage		Vehicles and equipment per unit								Railway car requirements per unit									
									Standard vehicles						Special equipment		Passenger			Freight						
									Trailers			Trucks					Coach	Pullman		Boxcar			Flatcar			
1	TOE	Unit	Off and WO	EM	Pieces	Weight	Pieces	Weight	Trailer, amph cargo, ¼-ton 4-ft wide 9-ft long	Etc.	Etc.	Truck, utility ¼-ton, 4x4 5-ft wide 11.5-ft long	Etc.	Etc.	Items	Shipping length (ft)	48 men	Std number of sec (2 sec)	Tour number sec (3 sec)	Kitchen baggage	Organizational equipment	Checkable baggage	40-ft	42-ft	46-ft	50-ft
2																										
3																										
4																										
5																										
6																										
7																										
8																										
9																										
10																										
11																										
12																										
13																										
14																										
15																										
16																										
17																										
18																										
19																										
20																										
21																										
22																										
23																										
24																										
25																										
26																										

Notes 1. This table can be adapted to any type of unit; the number of lines and columns will vary with the type of unit.
2. The division transportstion section should keep current a tentative table, in compliance with AR 220-10. Surodinate and separate units should maintain similar tables.
3. Upon receipt of movement order, the table will be revised to reflect actual strength and equipment on hand and to conform to the provisions of the movement order.
4. Organizational equipment and checkable baggage must be listed separately.

the equipment templates. By placing the templates over the usable loading space, the most economical car loading arrangements can be determined. Configurations for both tactical and administrative shipment of many items of military equipment are in TB 55-46-1. Tables 6-30 and 6-31 provide sample train consist and entraining tables respectively.

6-36. Individual Train Loading Plan

a. The division transportation section prepares an individual train loading plan (fig. 6-2). Copies should be furnished to—

(1) Troop commanders.

(2) Officer in charge of troops (train).

(3) Entraining officers.

(4) Motor park dispatcher (so that vehicles will arrive at entraining point in the order they will be loaded on railway cars).

(5) Local transportation officer.

b. In each block, indicate by symbol the specific personnel and equipment assigned to each car.

c. In each block representing an open-top freight car (flatcar or gondola car), indicate by symbol the equipment specifically assigned to each car.

d. In the space provided at the bottom of the plan, assign all cars (freight and passenger) by block numbers (not by railroad car initials and numbers) to the specific units that will occupy them.

Division

Train number_____ Main number_____

Assignment of Personnel and Equipment to Individual Railway Cars

Front

1	2	3	4	5	6	7
8	9	10	11	12	13	14
15	16					rear

Continue to last car

Suggested Symbols for Equipment and Vehicles

Equipment	Symbol	Equipment	Symbol	Equipment	Symbol	Equipment	Symbol
Coach	CH	Box	BX	Howitzer, 105-mm	HL		
Pullman, standard	SP	Truck, ¼-ton	TJ	Howitzer, 155-mm	HM		
Pullman, tourist	TP	Trailer, ¼-ton	TQ				
Troop sleeper	TS	Truck, 2½-ton	TC				
Kitchen car	K	Motorcycle	MC				
Kitchen baggage	KB						

Assignment of Units to Cars (by Block Numbers Above)

Unit	Block number	Unit	Block number	Unit	Block number

Figure 6-2. Individual train loading plan.

Table 6-30. Sample Train Consist Table

1	1	2	3	4	5	6	7	8	9	10
	Train number	Transportation grouping	Coach	Pullman		Kitchen or kitchen-baggage	Boxcar	Flat and gondola cars	Total	Train officers
				Standard	Tourist					
2	1									CO Mess off Surg
3	2									CO Mess off Surg
4	3									CO

Notes: 1. Upon receipt of movement order, commanding general will designate the order in which units will be forwarded.
2. Train consist table is prepared by division transportation section from dsta appearing on revised rail movement table.
3. Maximum and minimum length of trains (total number of freight and passenger cars) will be prescribed by the origin railroad.
4. Under "transportation grouping," show units tbat will comprise eacb individual train.
5. Under "train officers," show by name the officers sssigned to eacb train.

Table 6-31. Sample Entraining Table

	1	2	3	4	5	6	7	8	9	10	11
1	Train number	Main number	Order depart	Loading			Departure		Arrival		Entraining officer
				Point	Date	Hour	Date	Hour	Date	Hour	
2											
3											
4											
5											
6											
7											
8											
9											
10											
11											
12											
13											
14											
15											
16											
17											
18											
19											
20											
21											
22											
23											
24											
25											

Notes 1. Upon completion of train consist table and individual train loading plan, division transportation section will prepare this entraining table.
2. "Train number" will be shown on train consist table.
3. In CONUS, the "main number,' which authorizes the movement of each train, will be issued by the Military Transportation Section, Association of American Railroads, tbrough tthe Military Traffic Management and Terminsl Serrvice, Washington, D.C., to the local transportation officer, who will furnish main number to division transportation section. In theaters of operation, the main number normally will be issued by tbe TASCOM transportation officer.
4. Entraining officers will be designated by name.

Section IV. MOTOR TRANSPORT

6-37. Motor Transport Operations

a. Motor transport operations in support of roces in a theater of operations are generally either local or line hauls.

(1) Local hauls are characterized by low running time in relation to loading and unloading time. These hauls normally involve a number of trips per day and are evaluated on the basis of tons moved during the operational period. The method of operation predominantly used in local hauls is the shuttle, or a series of round trips made by the same vehicles between two specified points. Port and beach clearance, installation sup-

port operations, transfer operations, and field support operations are all readily adaptable to local haul.

(2) Line hauls are characterized by high running time in relation to loading and unloading. These hauls normally involve one trip or a portion of a trip per day. The most common method of operation used in line haul is the relay—transporting supplies or troops in continuous movement without transfer of load. This is accomplished by a change of truck-tractors or drivers. Intersectional motor transport service requirements generally are accomplished with line haul.

b. Other terms used in conjunction with motor transport operations are—

(1) Direct haul.

(2) Piggyback (or trailer or flatcar).

(3) Roll-on/roll-off.

(4) Highway movement.

(5) Off-road movement.

(6) Highway regulation (planning, scheduling, routing, and directing the actual use of a military road maneuver network by vehicular and foot traffic).

c. See FM 55–30 for details on motor transport service in theaters of operations.

6–38. Planning Factors

a. Because of the varied services performed, the different loads carried, and the different terrain over which motor transport operations are conducted, planning factors should be used with caution and applied only in the absence of specific data on the local situation. (For classified motor transport planning factors, see FM 101–10–3.)

b. The following factors are used in motor transport planning for computing truck and truck company requirements in the absence of specific data:

(1) Vehicle availability—the average number of task vehicles not in maintenance and therefore available for daily operations out of the total task vehicles assinged to a truck unit.

(*a*) Operational short range _ 83 percent.

(*b*) Long-range planning ___ 75 percent.

(2) Vehicle payload—the anticipated payload per vehicle (table 6–31). The following are rules of thumb only:

(*a*) Off road—rates capacity of vehicle.

(*b*) Highway—rated capacity plus 50 percent for trailer or semitrailers and 100 percent for tactical wheeled vehicles.

(*c*) For planning highway moves, table 6–32, column 4, shows the average tons that can be hauled by the various capacity vehicles.

(3) Trips per day—the daily round trips that a vehicle averages. These vary with running time and loading and unloading times. The following are general averages only:

(*a*) Line haul—two per day.

(*b*) Local hauls—four per day.

(4) Length of haul—the one-way distance that cargo is to be hauled, from which round-trip distance may be computed. The following are rules of thumb only:

(*a*) Line haul—160 kilometers one way.

(*b*) Local haul—25 kilometers one way.

(5) Rate of movement—the average number of kilometers covered in an hour, including halts during the period of movement. For long-range planning, the following estimates may be used:

(*a*) Poor roads—16 kilometers in the hour.

(*b*) Good roads—25 kilometers in the hour.

(6) Turnaround time—the time consumed in loading, unloading, and moving from origin to destination and return to origin.

(7) Loading and unloading time—time consumed per turnaround in loading and unloading areas, including time waiting, spotting, documenting, and handling cargo on and off vehicles. The following are loading and unloading times for loose cargo:

(*a*) Trucks—2.5 hours per round trip.

(*b*) Semitrailers in relay operation—1 hour per relay; 2.5 hours' loading and unloading time per round trip.

(*c*) Truck-tractors in relay operations—1 hour per relay.

(8) Operational day—the number of hours per day in which vehicles with drivers normally are employed.

(*a*) One shift—10 hours.

(*b*) Round the clock—20 hours.

(9) Unit lift and daily lift—unit lift is the amount of cargo a truck unit is expected to move at one time; daily lift is that which the unit can move in a day with a number of trips (table 6–33).

(10) Ton-kilometers and passenger-kilometers

—the product of the number of tons or passengers and the actual distance they are moved.

c. Table 6-32 gives vehicle payload capacities. Passenger capacity is based on an allowance of 18 inches per man, excluding driver and assistant driver. No allowance is made for individual field equipment in automobiles and ambulances. Passengers are not carried in semitrailers and dump trucks except in emergencies. Types of semitrailers generally not used in off-road operations are semitrailer, fuel-servicing, 5,000-gallon; refrigerator; 12-ton van; and tank transporter.

6-39. Computing Truck Unit Requirements

a. The following formulas may be used for motor transport planning:

(1) *One-lift hauls.* To determine the number of truck companies required to move a given number of tons in one lift, use the following formula:

$$\frac{\text{Tons to be lifted}}{\text{tons per vehicle} \times \text{vehicle availability per company}} = \text{truck companies required}$$

Example. To determine the number of transportation light truck companies required to move 2,700 STON in one lift, when—

2,700 = tons to be lifted
4 = tons per truck, 2½-ton, 6x6
45 = vehicles available per company

$$\frac{2{,}700}{4 \times 45} = 15 \text{ transportation light truck companies required}$$

Note. If the number of vehicles required is desired rather than the number of truck companies, *omit* the vehicle availability factor in the formula.

(2) *Sustained haul in one continuous operation.* In most operations there is a continuous flow of supplies forward from dumps, depots, beaches, or terminals. In such cases, tonnages move forward only, and trucks return for another load. The average turnaround time required by the truck units to complete the round trip must be considered. Turnaround time is computed by dividing the round-trip distance by the rate of movement and adding delays. Thus, turnaround time

$$= 2 \times \frac{\text{distance}}{\text{rate}} + \text{delays.}$$

The applicable formula for sustained operations becomes—

$$\frac{\text{Daily tonnage forward} \times \text{turnaround time}}{\text{tons per vehicle} \times \text{vehicles available per company} \times \text{operating time per day}} = \text{truck companies required}$$

Example. To determine the number of transportation medium truck companies, equipped with 12-ton cargo semitrailers, required to haul 4,800 STON per day 240 kilometers from point A to point B, using the semitrailer relay method of operation, when—

Rate = 20 kilometers in the hour

Delay = 2 hours per round trip

The turnaround time becomes—

$$2 \times \frac{240}{20} + 2 + 6^{*} = 32 \text{ hours}$$

To complete the example, when—

Tons per vehicle = 12

Vehicles available per company = 45 (the prime mover is the limiting factor, regardless of the number of semitrailers on hand)

Operating time per day = 20 hours

The formula becomes—

$$\frac{4{,}800 \times 32}{12 \times 45 \times 20} = 14.2 \text{ or } 15 \text{ medium truck companies required}$$

b. Formulas similar to those in *a* above can be used to compute requirements for troop movements or for hauling bulk liquid by using the number of persons or gallons respectively rather than STON.

c. Through study and analysis of intelligence reports or the actual survey of road conditions in an area of operations, the highway planner may develop good reason for assuming that the planning factors as shown may be changed. He should, therefore, be in a position to alter his assumptions, computations, and the resulting requirements.

6-40. Highway Tonnage Capabilities

a. In selecting the routes over which cargo is to be hauled, the planner must consider the capabilities of the roads and bridges to sustain the operation. The gross weight of the heaviest loaded vehicle should not exceed the rated tonnage capacity of the weakest bridge, unless it is determined that such bridge or bridges will be strengthened. It is difficult to determine the exact tonnage capabilities of highways for sustained operations because of the number of varying conditions that prevail. Also, the volume of tactical, administrative, and indigenous traffic to be accommodated on supply routes may exceed the number of cargo-hauling

*Relay time (6 hr) computed as 1 hour required for each relay operation and a relay required at each end of a segment of a relay operation. In the problem, the distance (240 km) was divided into 3 equal segments of 80 kilometers. Hence, 3 × 2 = 6.

Table 6-32. Vehicle Payload Capacities for General Planning

1	1	2	3	4	5	6	7	8	9
1	LIN	Nomenclature	Off road (tons)	Highway average (tons)	Highway maximum (tons)	Towing capacity (tons)		Passengers	Cargo space
						Highway	Cross country		
2	B04441	Automobile, sedan, lt						4	
3	C39696	Bus, 37-pax						37 (or 18 litters)	
4	D11048	Carr, cgo, tracked, 6-ton, M548							
5	D12086	Carr, pers, full-tracked, armd						11	
6	S70106	Stlr, low-bed, 12-ton, 25-ft	12	16	18				200 sq ft
7	S70380	Stlr, low-bed, 15-ton, 4-wheel	15	15	20				320 sq ft
8	S70517	Stlr, low-bed, 25-ton, 4-wheel	25	25	30				
9	S70791	Stlr, low-bed, 60-ton, 8-wheel	60	60	60				204 sq ft
10	S71613	Stlr, reefer, 7½-ton, 2-wheel	6	6	7.5				790 cu ft
11	S71887	Stlr, stake, 6-ton, 2-wheel	6	9	9			*24	1,130 cu ft
12	S72024	Stlr, stake, 12-ton, 4-wheel	12	12	18			*50	2,100 cu ft
13	S72161	Stlr, stake, 20-ton, 34-ft	20	20	24			*65	1,400 cu ft
14	S72846	Stlr, tk, gas, 5,000-gal, 4-wheel	5,000 gal	5,000 gal	5,000 gal				
15	S73394	Stlr, tk transporter, 50-ton, 8-wheel	50	50	50				
16	S73805	Stlr, van, cgo, 6-ton, 2-wheel	6	9	9			*24	1,020 cu ft
17	S73942	Stlr, van, 20-ton, 34-ft	20	20	24			*65	1,349 cu ft
18	S75038	Stlr, van, shop, 6-ton, 2-wheel	6	8	8				1,675 cu ft
19	S75175	Stlr, van, 12-ton, 4-wheel	12	18	18			*50	1,342 cu ft
20	W95537	Tlr, cgo, ¾-ton, 2-wheel	0.75	1.1	1.1				175 cu ft
21	X38639	Trk, amb, frontline, ¼-ton, 4x4	0.4	0.5	0.5			4 (or 3 litters)	
22	X38776	Trk, amb, ¾-ton, 4x4						8 (or 5 litters)	
23	X39735	Trk, cgo, ¾-ton, 4x4	0.75	1	1.5	2		8	146 cu ft
24	X40009	Trk, cgo, 2½-ton, 6x6	2.5	4	5	5	3	20	442 cu ft
25	X40381	Trk, cgo, 5-ton, 6x6 (single tires)	5	6	7.5	15	7.5	20	473 cu ft
26	X41105	Trk, cgo, 5-ton, 6x6 (dual tires)	5	6	10	15	7.5	20	506 cu ft
27	X41790	Trk, cgo, 10-ton, 6x6	10	10	15	25	15		600 cu ft
28	X43297	Trk, dump, 2½-ton, 6x6	2.5	4	5	5	3	20	67 cu ft
29	X43845	Trk, dump, 5-ton, 6x6	5	7.5	7.5	15	7.5	15	135 cu ft
30	X57271	Trk, tk, gas, 2½-ton, 6x6	800 gal	1,200 gal	1,200 gal				
31	X58367	Trk, tk, water, 2½-ton, 6x6	600 gal	1,000 gal	1,000 gal				
32	X61107	Trk, util, ¼-ton, 4x4	0.4	0.4	0.6	1	0.75	4	
33	X62006	Trk, van, shop, 2½-ton, 6x6	2.5	2.5	2.5	4	3		
34	X62340	Trk, van, shop, 2½-ton, 6x6	2.5	3.5	3.5	4	3		

*Recommended for emergency use only. No troop seats provided.

Table 6-33. Truck Unit Capability Estimates for Long-Range Planning
a. Local Haul—STON Per Day (Highway)
(Vehicle availability × average tons per vehicle × trips per day.)

	1	2	3
1	Unit	Computation	STON per day
2	Light trk co (2-1/2-ton)	45×4×4=	720.
3	Light trk co (5-ton)	45×6×4=	1,080.
4	Medium trk co (stlr)	45×12×4=	2,160.
5	Medium trk co (petrl) (stlr)	45×5,000×4=	900,000 gal per day.
6	Medium trk co (reefer, 7-1/2-ton)	45×6×4=	1,080
7	Heavy trk co (stlr, tank transporter)	18×40×4=	2,880.

b. Line Haul—STON Per Day (Highway)
(Vehicle availability×average tons per trip×trips per day.)

	1	2	3
1	Unit	Computation	STON per day
2	Light trk co (2-1/2-ton)	45×4×2=	360.
3	Light trk co (5-ton)	45×6×2=	540.
4	Medium trk co (stlr)	45×12×2=	1,080.
5	Medium trk co (petrl) (stlr)	45×5,000×2=	450,000 gal per day.
6	Medium trk co (reefer, 7-1/2-ton)	45×6×2	540.
7	Heavy trk co (stlr, tank transporter)	18×40×2=	1,440.

Table 6-34. Highway Tonnage Capabilities

	1	2	3	4	5	6	7	8	9
		Daily tonnage forward			Availability applicable under various conditions				
1	Type of highway	Optimum dispatch route only (STON)	Supply traffic communications zone (STON)	Supply traffic combat zone (STON)	Narrow roadway (percentage)	Rolling terrain (percentage)	Hilly terrain with curves (percentage)	Mountainous terrain (percentage)	Seasonal bad weather (percentage)
2	Concrete	60,000	36,000	8,400	75	90	70	40	80
3	Bituminous	45,000	27,000	7,300	75	90	70	40	70
4	Bituminous-treated	30,000	18,000	5,800	75	80	60	35	60
5	Gravel	10,150	6,090	3,400	75	80	50	30	40
6	Dirt	4,900	2,940	1,600	75	75	40	20	10

vehicles, which further restricts the capabilities of motor transport.

b. Table 6–34 may be used as a guide in the absence of more current data for estimating the supply support tonnage capabilities of highways under varied conditions, assuming that operations are sustained, adequate road maintenance is provided, and each road bears two-way traffic. In using the availability factors, when more than one limiting feature is involved, apply the narrow roadway factor first; then to the new capability, apply one of the next three on terrain; and, finally, to the latter adjusted capability, apply the weather factor if the conditions are for a sustained period. All availability factors are minimum under extreme conditions. Columns 5 through 9 in table 6–34 define the various conditions of railway, terrain, and weather and provide a guide for estimating incremental availability in highway tonnage capabilities associated wth deviations from standard conditions.

c. Planned tonnage movement should not exceed the capability of any portion of the road net to be used, unless reconstruction or heavy maintenance is provided to increase the capability of the section of highway or bridge to meet the demands. Otherwise, alternate routes must be selected to distribute the load. If no alternate route is availa-

ble and the indicated tonnage is not reduced, the highway or bridge can be expected to deteriorate rapidly and disrupt any sustained operation. (Maintenance vehicles and personnel on a road also may interfere with the flow of traffic and thereby limit capability.)

Section V. AIR

6–41. Movement by USAF Aircraft

a. General.

(1) Table 6–35 may be used as a general guide to determine the airlift requirements, by type of USAF transport aircraft, for movement of divisional and nondivisional units that might be in a type of field army (para 1–6). Units shown comprise field army command and control units; units of the five division and separate brigade bases; manuever battalions; and selected units that furnish combat support and combat service support to the field army.

(2) In applying the tables below to actual air movement, the user should remember that the required lift for any unit will fluctuate with the personnel and equipment status of that unit and with the allowable cargo load (ACL) of the aircraft for the specific operational conditions of the air movement. The tables show numbers of aircraft load, i.e., the number of sorties, by type of aircraft, required to move a particular unit. Fewer aircraft than shown may transport the unit if part or all of the aircraft fly more than one sortie.

(3) The air movement of a large body of troops normally involves departures from several airfields and, in air-landed operations, concurrent landing at several terminal airfields, air-landing facilities, or landing zones in the objective area. The availability of transport aircraft, air installations, and base facilities; the urgency of the situation; and enemy capabilities are major factors in determining the number of installations employed and the number of sorties to be flown by the transporting aircraft. FM 100–5 and FM 101–5 provide general considerations and procedures governing the employment of air transportation. TM 55–450–15 contains specific information regarding load planning, determination of aircraft requirements, and forms relative to air movement.

b. Airlift Requirements—Field Army Units.

(1) *General.* The tabulated data in table 6–35 represent airlift requirements by USAF transport aircraft for selected units of a type of field army. For planning, all units are moved at 100-percent TOE personnel and equipment strength. The company (battery, troop) is treated as though it were on an independent mission; e.g., in table 6–35, no company-size unit is combined with another unit. In other words, unit integrity is maintained at company level.

(2) *Aircraft requirements.*

(*a*) Aircraft requirements listed in table 6–35 reflect the number of sorties required to transport the various units of company (troop, battery) size.

(*b*) Under optimum conditions, the following assumed ACL (3,000-nautical-mile range) are the bases for aircraft requirements, but must be confirmed by USAF airlift personnel controlling the move:

	Pounds
C–130 medium transport airplane	37,000
C–141 heavy transport airplane	55,000
C–5 heavy transport airplane	210,000

(*c*) USAF troop carrier units providing aircraft for the operation will announce to the Army component of the airborne force the ACL for each type of aircraft to be employed. The ACL will vary with the distance of flight and other operational conditions.

(*d*) In any airborne operation, types of aircraft other than those listed may have to be used. However, the data given in table 6–35 will serve as a basis for adaptation of the units to be moved to the types of aircraft that are available.

(*e*) Table 6–35 indicates three types of combinations of aircraft. Other types of combinations may be necessary.

1. Combination 1 consists of C–130 and C–5 aircraft. In determining aircraft requirements for this combination, the minimum required number of C–5 aircraft has been used, i.e., items of equipment that cannot be carried in C–130 aircraft (either too heavy or too large) have been loaded in the C–5.

2. Combination 2 consists of C–141 and C–5 aircraft.

3. Combination 3 consists of C–5 aircraft only. (Table 6–36 lists items transportable only by C–5 aircraft. Additionally, helicopters, if partially

Table 6-35. Airlift Requirements—Field Army Units

a. Command and Control Units

1	Unit	TOE	Wt of pers and equip		Acft requirements to move—										
					Pers	Bulk loaded items of equip	Major items of equip	Oversize/ overwt items of equip	Pers	Bulk loaded items of equip	Major items of equip	Oversize/ overwt items of equip	Pers	Bulk loaded items of equip	Major items of equip
			STON	MTON	Acft combination 1				Acft combination 2				Acft combination 3		
						C-130		C-5	C-141		C-5		C-5		
2	HHC, army	51-1G	237.8	834.1	12	1	21	1	5	1	12	-------	5	1	6
3	HHC, corps	52-1G	179.0	742.3	5	1	6	1	2	1	4	1	2	1	2
4	HHC and sp trp, FASCOM	54-12G	157.3	433.5	9	1	8	1	4	1	4	-------	4	1	1
5	HHC, army spt bde	54-22G	93.8	272.1	2	1	1	1	5	1	-------	-------	2	1	1
6	HHC, corps spt bde or COSCOM	54-22G	106.5	306.9	6	1	5	1	3	1	3	1	3	1	1
7	HHC, spt gp, corps	29-102G	192.5	851.5	3	1	20	------	2	1	12	-------	1	1	2

b. Division Bases

1	Unit	TOE	Wt of pers and equip		Acft requirements to move—										
					Pers	Bulk loaded items of equip	Major items of equip	Oversize/ overwt items of equip	Pers	Bulk loaded items of equip	Major items of equip	Oversize/ overwt items of equip	Pers	Bulk loaded items of equip	Major items of equip
			STON	MTON	Acft combination 1				Acft combination 2				Acft combination 3		
					C-130			C-5	C-141		C-5		C-5		
	Armd div (TOE 17H)														
2	HHC	17-4H	253.9	1,239.5	4	1	20	2	2	1	11	-------	2	1	3
3	MP co	19-27H	139.2	738.3	4	1	22	-------	2	1	12	-------	-------	-------	5
4	Div avn co	17-87H	211.5	2,142.5	2	1	22	-------	1	1	13	1	1	1	4
	Sig bn (TOE 11-35H):														
5	HHC	11-36H	175.0	833.4	2	1	19	1	1	1	11	1	1	1	2
6	Comd op co	11-37H	321.4	1,509.5	4	1	40	1	2	1	23	-------	2	1	4
7	Fwd comm co	11-38H	227.4	1,107.8	3	1	36	-------	2	1	20	-------	2	1	3
8	Spt op co	11-39H	260.2	1,233.4	4	1	35	-------	2	1	20	-------	2	1	3
	Engr bn (TOE 5-145H):														
9	HHC	5-146H	903.3	2,928.0	4	1	40	-------	2	1	30	3	2	1	8
10	4 cbt engr co (each)	5-147H	433.9	1,086.6	3	1	18	2	2	1	13	-------	2	1	4
11	Brg co [1]	5-148H	569.0	1,969.0	3	1	28	4	2	1	20	-------	1	1	6
12	3 bde HHC (each)	17-42H	220.2	1,196.7	2	1	20	1	1	1	12	1	1	1	3

	Armd cav sqdn (TOE 17-105H):															
13	HHT	17-106H	608.8	2,219.8	4	1	39	2	2	1	23	2	2	1	6
14	3 armd cav trp (each)	17-107H	408.2	1,028.7	8	1	23	1	2	1	14	-------	2	1	4
15	Air cav trp	17-108H	227.0	3,842.1	3	1	21	5	2	1	12	5	2	1	6
	Div arty (TOE 6-300H):															
16	HHB	6-302H	330.7	2,617.8	4	1	42	-------	2	1	24	1	2	1	5
	3 FA bn, 155-mm, SP (TOE 6-365H) (each):															
17	HHB	6-366H	225.9	929.5	3	1	21	1	2	1	11	-------	2	1	2
18	3 FA btry (each)	6-367H	278.3	845.4	2	1	11	-------	1	1	7	2	1	1	3
19	Svc btry	6-369H	406.3	1,602.7	2	1	31	-------	1	1	18	1	1	1	4
	FA bn, 8-in., SP (TOE 6-395H):															
20	HHB	6-396H	148.8	661.6	2	1	19	1	1	1	10	-------	1	1	2
21	3 FA btry (each)	6-397H	277.3	906.4	2	1	13	-------	1	1	8	2	1	1	3
22	Svc btry	6-399H	284.9	972.2	2	1	16	-------	1	1	10	2	1	1	3
	FA bn, HJ (TOE 6-175H):															
23	HQ, H&S btry	6-176H	183.5	865.1	2	1	21	1	1	1	12	-------	1	1	42
24	2 FA btry (each)	6-177H	218.2	988.6	2	1	12	1	1	1	8	1	1	1	3
	DISCOM (TOE 29-21H):															
25	HHD	29-2H	555.0	268.1	1	1	8	-------	1	1	5	-------	1	1	1
26	AG DS co	12-7H	131.3	522.9	5	1	8	1	3	1	5	1	2	1	2
27	Div DPU	29-590H	148.3	831.2	2	1	82	2	1	1	3	2	1	1	2
28	Fin DS co	14-7H	46.8	158.8	2	1	3	-------	1	1	2	-------	1	1	1
	Maint bn (TOE 29-35H):															
29	HQ & lt maint co	29-36H	518.3	2,499.5	3	1	33	3	2	1	20	-------	1	1	6
30	Hv maint co	29-38H	679.4	2,518.7	4	1	24	6	2	1	14	6	2	1	114
31	3 fwd spt co (each)	29-37H	404.5	1,691.1	3	1	23	2	2	1	13	2	2	1	4
32	Trans acft maint co	55-424H	509.2	2,952.7	2	1	29	-------	1	1	14	4	1	1	7
	Med bn (TOE 8-35H):															
33	HQ & spt co	8-36H	245.5	1,240.6	3	1	30	-------	2	1	18	-------	2	1	3
34	3 med co (each)	8-37H	119.2	592.8	2	1	14	-------	1	1	9	-------	1	1	2
	S&T bn (TOE 29-115H):															
35	HHC	29-6H	84.7	395.1	2	1	9	1	1	1	5	1	1	1	1
36	S&S co	10-7H	207.2	824.4	3	1	16	1	1	1	10	1	1	1	2
37	TMT co	55-87H	1,388.0	6,711.8	4	1	131	6	2	1	67	6	2	1	17
	ADA bn, CHAP/Vulcan, SP (TOE 44-325H):															
38	HHB	44-326H	176.8	806.7	2	1	17	-------	1	1	10	1	1	1	2
39	2 ADA btry, Vulcan, SP (each).	44-327H	365.6	1,071.8	2	1	15	-------	1	1	10	2	1	1	4
40	2 ADA btry, CHAP, SP (each).	44-328H	205.9	961.2	3	1	18	-------	1	1	11	1	1	1	2
	Inf div (TOE 7H)															
41	HHC	7-4H	248.8	1,277.2	4	1	22	1	2	1	13	1	2	1	3
42	MP co	19-27H	139.2	738.3	4	1	22	-------	2	1	12	----------	----------	----	5
	Cbt avn bn (TOE 7-75H):															
43	HHC	7-76H	166.8	797.9	2	1	17	1	1	1	10	1	1	1	2
44	Aslt hel co	7-77H	278.7	5,428.6	3	1	17	7	2	1	11	7	2	1	7
45	Avn GS co	7-78H	174.5	2,020.7	2	1	17	2	1	1	10	-------	1	1	4

[1] When equipped with mobile assault bridge.

Table 6-35. Airlift Requirements—Field Army Units—Continued

b. Division Bases—Continued

1	Unit	TOE	Wt of pers and equip		Acft requirements to move—										
					Pers	Bulk loaded items of equip	Major items of equip	Oversize/ overwt items of equip	Pers	Bulk loaded items of equip	Major items of equip	Oversize/ overwt items of equip	Pers	Bulk loaded items of equip	Major items of equip
			STON	MTON	Acft combination 1				Acft combination 2				Acft combination 3		
					C-130			C-5	C-141		C-5		C-5		
	Sig bn (TOE 11-35H):														
46	HHC	11-36H	175.0	833.4	2	1	19	1	1	1	11	1	1	1	2
47	Comd op co	11-37H	321.4	1,509.5	4	1	40	1	2	1	23	--	2	1	4
48	Fwd comm co	11-38H	227.4	1,107.8	3	1	36	--	2	1	20	--	2	1	3
49	Spt op co	11-39H	260.2	1,233.4	4	1	35	--	2	1	20	--	2	1	3
	Engr bn (TOE 5-155H):														
50	HHC	5-156H	831.2	2,891.5	4	1	42	4	2	1	30	--	2	1	8
51	3 cbt engr co (each)	5-157H	456.2	1,258.3	3	1	19	2	2	1	15	1	2	1	5
52	Brg co [1]	5-148H	569.0	1,969.0	3	1	28	4	2	1	20	--	1	1	6
53	3 bde HHC (each)	7-42H	162.3	1,133.8	2	1	20	--	1	1	12	1	1	1	2
	Armd cav sqdn (TOE 17-105H):														
54	HHT	17-106H	608.8	2,219.8	4	1	39	2	2	1	23	2	2	1	6
55	3 armd cav trp (each)	17-107H	408.2	1,028.7	3	1	23	1	2	1	14	--	2	1	4
56	Air cav trp	17-108H	227.0	3,842.1	3	1	21	5	2	1	12	5	2	1	6
	Div arty (TOE 6-100H):														
57	HHB	6-302H	330.7	2,617.8	4	1	42	--	2	1	24	1	2	1	5
	3 FA bn, 105-mm, towed (TOE 6-155H) (each):														
58	HHB	6-156H	168.5	854.5	3	1	23	1	2	1	13	--	2	1	2
59	3 FA btry (each)	6-157H	144.0	718.1	2	1	17	--	1	1	12	--	1	1	2
60	Svc btry	6-159H	211.0	1,003.2	2	1	22	1	2	1	12	1	2	1	2
	FA bn, 155-mm towed/8-in, SP (TOE 6-165H):														
61	HHB	6-166H	145.2	718.8	3	1	21	1	1	1	13	1	1	1	2
62	3 FA btry, 155-mm, towed (each).	6-167H	202.2	853.6	2	1	18	--	2	1	9	--	2	1	2
63	FA btry, 8-in, SP	6-358H	295.7	961.4	2	1	13	2	1	1	8	2	1	1	3
64	Svc btry	6-169H	270.5	1,111.0	2	1	22	1	1	1	13	1	1	1	3
	FA bn, HJ (TOE 6-175H):														
65	HQ, H&S btry	6-176H	183.5	865.1	2	1	21	1	1	1	12	--	1	1	42
66	2 FA btry (each)	6-177H	218.2	988.6	2	1	12	1	1	1	8	1	1	1	3
	DISCOM (TOE 29-1H):														
67	HHD	29-2H	555.0	268.1	1	1	8	--	1	1	5	--	1	1	1
68	AG DS co	12-7H	131.3	522.9	5	1	8	1	3	1	5	1	2	1	2
69	Div DPU	29-590H	148.3	831.2	2	1	82	2	1	1	3	2	1	1	2

70	Fin DS co	14-7H	46.8	158.8	2	1	3	----	1	1	2	----	1	1	1
	Maint bn (TOE 29-15H):														
71	HQ & lt maint co	29-16H	508.8	2,447.6	3	1	32	3	2	1	19	3	1	1	6
72	3 fwd spt co (each)	29-17H	370.5	1,576.8	2	1	20	2	1	1	12	2	1	1	4
73	Hv maint co	29-18H	444.2	1,688.5	4	1	20	3	2	1	11	----	2	1	5
74	Trans acft maint co	55-89H	572.1	3,241.3	3	1	32	4	2	1	17	4	1	1	7
	Med bn (TOE 8-35H):														
75	HQ & spt co	8-36H	245.5	1,240.6	3	1	30	----	2	1	18	----	2	1	3
76	3 med co (each)	8-37H	119.2	592.8	2	1	14	----	1	1	9	----	1	1	2
	S&T bn (TOE 29-5H):														
77	HHC	29-6H	84.7	395.1	2	1	9	1	1	1	5	1	1	1	1
78	S&S co	10-7H	207.2	824.4	3	1	16	1	1	1	10	1	1	1	2
79	TMT co	55-88H	1,181.2	5,672.0	3	1	119	4	2	1	63	4	2	1	14
	ADA bn, CHAP/Vulcan, SP (TOE 44-325H):														
80	HHB	44-326H	176.8	806.7	2	1	17	----	1	1	10	1	1	1	2
81	2 ADA btry, Vulcan, SP (each).	44-327H	365.6	1,071.8	2	1	15	----	1	1	10	2	1	1	4
82	2 ADA btry, CHAP, SP (each).	44-328H	205.9	961.2	3	1	18	----	1	1	11	1	1	1	2
	Inf div (mech) (TOE 37H)														
83	HHC	37-4H	252.3	1,221.8	4	1	19	2	2	1	11	2	2	1	2
84	MP co	19-27H	139.2	738.3	4	1	22	----	2	1	12	----	----	----	5
85	Div avn co	37-87H	211.5	2,142.5	2	1	22	1	1	1	13	1	1	1	4
	Sig bn (TOE 11-35H):														
86	HHC	11-36H	175.0	833.4	2	1	19	1	1	1	11	1	1	1	2
87	Comd op co	11-37H	321.4	1,509.5	4	1	40	1	2	1	23	----	2	1	4
88	Fwd comm co	11-38H	227.4	1,107.8	3	1	36	----	2	1	20	----	2	1	3
89	Spt op co	11-39H	260.2	1,233.4	4	1	35	----	2	1	20	----	2	1	3
	Engr bn (TOE 5-145H):														
90	HHC	5-146H	903.3	2,928.0	4	1	40	----	2	1	30	3	2	1	8
91	4 cbt engr co (each)	5-147H	433.9	1,086.6	3	1	18	2	2	1	13	----	2	1	4
92	Brg co [1]	5-148H	569.0	1,969.0	3	1	28	4	2	1	20	----	1	1	6
93	3 bde HHC (each)	37-42H	219.2	1,191.0	2	1	20	----	1	1	12	1	1	1	3
	Armd cav sqdn (TOE 17-105H):														
94	HHT	17-106H	608.8	2,219.8	4	1	39	2	2	1	23	2	2	1	6
95	3 armd cav trp (each)	17-107H	408.2	1,028.7	3	1	23	1	2	1	14	----	2	1	4
96	Air cav trp	17-108H	227.0	3,842.1	3	1	21	5	2	1	12	5	2	1	6
	Div arty (TOE 6-300H):														
97	HHB	6-302H	330.7	2,617.8	4	1	42	----	2	1	24	1	2	1	5
	3 FA bn, 155-mm, SP (TOE 6-365H) (each):														
98	HHB	6-366H	225.9	929.5	3	1	21	1	2	1	11	----	2	1	2
99	3 FA btry (each)	6-367H	278.3	845.4	2	1	11	----	1	1	7	2	1	1	3
100	Svc btry	6-369H	406.3	1,602.7	2	1	31	----	1	1	18	1	1	1	4
	FA bn, 8-in, SP (TOE) 6-395H):														
101	HHB	6-396H	148.8	661.6	2	1	19	1	1	1	10	----	1	1	2

[1] When equipped with mobile assault bridge.

Table 6-35. Airlift Requirements—Field Army Units—Continued

t. Division Bases—Continued

1	Unit	TOE	Wt of pers and equip		Acft requirements to move—										
					Pers	Bulk loaded items of equip	Major items of equip	Oversize/ overwt items of equip	Pers	Bulk loaded items of equip	Major items of equip	Oversize/ overwt items of equip	Pers	Bulk loaded items of equip	Major items of equip
			STON	MTON	Acft combination 1				Acft combination 2				Acft combination 3		
					C-130			C-5	C-141		C-5		C-5		
102	3 FA btry (each)	6-397H	277.3	906.4	2	1	13		1	1	8	2	1	1	3
103	Svc btry	6-399H	284.9	972.2	2	1	16		1	1	10	2	1	1	3
	FA bn, HJ (TOE 6-175H):														
104	HQ, H&S btry	6-176H	183.5	865.1	2	1	21	1	1	1	12		1	1	42
105	2 FA btry (each)	6-177H	218.2	988.6	2	1	12	1	1	1	8	1	1	1	3
	DISCOM (TOE 29-11H):														
106	HHD	29-2H	555.0	268.1	1	1	8		1	1	5		1	1	1
107	AG DS co	12-7H	131.3	522.9	5	1	8	1	3	1	5	1	2	1	2
108	Div DPU	29-590H	148.3	831.2	2	1	82	2	1	1	3	2	1	1	2
109	Fin DS co	14-7H	46.8	158.8	2	1	3		1	1	2		1	1	1
	Maint bn (TOE 29-25H):														
110	HQ & lt maint co	29-26H	510.6	2,466.4	3	1	33	3	1	1	20	3	1	1	6
111	Hv maint co	29-28H	658.0	2,408.5	4	1	21	6	2	1	12		2	1	7
112	3 fwd spt co (each)	29-27H	411.1	1,724.4	3	1	24	2	2	1	14		2	1	4
113	Trans acft maint co	55-424H	509.2	2,952.7	2	1	29		1	1	14	4	1	1	7
	Med bn (TOE 8-35H):														
114	HQ & spt co	8-36H	245.5	1,240.6	3	1	30		2	1	18		2	1	3
115	3 med co (each)	8-37H	119.2	592.8	2	1	14		1	1	9		1	1	2
	S&T bn (TOE 29-65H):														
116	HHC	29-6H	84.7	395.1	2	1	9	1	1	1	5	1	1	1	1
117	S&S co	10-7H	207.2	824.4	3	1	16	1	1	1	10	1	1	1	2
118	TMT co	55-84H	1,300.2	6,268.0	4	1	126	5	2	1	65		2	1	16
	ADA bn, CHAP/Vulcan, SP (TOE 44-325H):														
119	HHB	44-326H	176.8	806.7	2	1	17		1	1	10	1	1	1	2
120	2 ADA btry, Vulcan, SP (each).	44-327H	365.6	1,071.8	2	1	15		1	1	10	2	1	1	4
121	2 ADA btry, CHAP, SP (each).	44-328H	205.9	961.2	3	1	18		1	1	11	1	1	1	2

	Abn div (TOE 57G)														
122	HHC	57-4G	104.7	501.5	3	1	16		2	1	9		2	1	1
123	MP co	19-67G	69.3	307.4	3	1	12		2	1	6		2	1	1
	Cbt avn bn (TOE 1-55G):														
124	HHC	1-56G	98.7	499.0	2	1	12		1	1	8		1	1	2
125	Aslt hel co	1-57G	233.9	5,199.0	4	1	12	7	2	1	7		2	1	7
126	Avn GS co	1-58G	119.8	2,037.8	2	1	17	1	1	1	7	2	1	1	3
	Sig bn (TOE 11-215G):														
127	HHC	11-216G	94.2	441.0	2	1	10	1	1	1	6		1	1	1
128	Comd op co	11-217G	155.3	728.0	4	1	24		2	1	12		2	1	2
129	Spt op co	11-218G	160.3	759.5	4	1	25		2	1	13		2	1	2
	Engr bn (TOE 5-25G):														
130	HHC	5-26G	445.1	1,699.6	4	1	36	1	2	1	21	1	2	1	5
131	3 engr Co (each)	5-27G	116.7	491.1	3	1	13		1	1	7		1	1	2
132	3 bde HHC (each)	57-42G	93.5	774.7	3	1	15		1	1	9		1	1	2
	Armd cav sqdn (TOE 17-75G):														
133	HHT	17-76G	211.7	1,054.1	3	1	29		2	1	17		2	1	3
134	2 armd cav trp (each)	17-77G	79.5	351.2	3	1	14		2	1	7		1	1	1
135	Air cav trp	17-78G	213.3	4,170.8	4	1	30	2	2	1	11	4	2	1	5
	Div arty (TOE 6-200G):														
136	HHB	6-201G	185.6	1,879.7	4	1	32		2	1	17	1	2	1	3
	3 FA bn, 105-mm, towed (TOE 6-215G) (each):														
137	HQ, H&S btry	6-216G	168.6	796.4	3	1	22		2	1	13		2	1	2
138	3 FA btry (each)	6-217G	79.3	398.6	2	1	12		1	1	7		1	1	1
	DISCOM (TOE 29-51G):														
139	HHC & band	29-52G	52.7	183.1	3	1	5		2	1	3		2	1	1
140	Admin co	12-157G	358.2	1,569.6	7	3	20	2	3	2	12		3	1	3
141	Sup co	10-37G	88.6	388.1	2	1	9		1	1	5		1	1	1
142	QM air equip spt co	10-337G	638.2	1,739.5	4	5	30		2	3	17		2	1	4
	Maint bn (TOE 29-55G):														
143	HHD	29-56G	17.1	76.0	1	1	3		1	1	2		1	1	1
144	Gnd maint co	29-57G	262.2	1,161.2	6	1	31		3	1	18		3	1	3
145	Trans acft maint co	55-99G	309.1	1,948.0	3	1	22		1	1	13	2	1	1	4
	Med bn (TOE 8-65G):														
146	HQ & spt co	8-66G	119.0	580.9	3	1	19		2	1	10		1	1	2
147	3 med co (each)	8-67G	85.0	417.2	2	1	14		1	1	8		1	1	1

Table 6-35. Airlift Requirements—Field Army Units—Continued

b. Division Bases—Continued

1	Unit	TOE	Wt of pers and equip		Acft requirements to move—										
					Pers	Bulk loaded items of equip	Major items of equip	Oversize/ overwt items of equip	Pers	Bulk loaded items of equip	Major items of equip	Oversize/ overwt items of equip	Pers	Bulk loaded items of equip	Major items of equip
			STON	MTON	Acft combination 1				Acft combination 2				Acft combination 3		
					C-130			C-5	C-141		C-5		C-5		
	ADA bn, CHAP/Vulcan, towed (TOE 44-425T):														
148	HHB[2]	44-426T													
149	2 ADA btry, Vulcan, towed (each).[2]	44-427T													
	Ambl div (TOE 67T)														
150	HHC	67-2T	127.8	608.9	3	1	18		2	1	10		2	1	2
151	MP co	19-87T	73.0	319.0	3	1	12		2	1	6		2	1	1
	Cbt avn gp (1-100T):														
152	HHC	1-101T	153.6	719.0	4	1	21		2	1	12		2	1	2
153	Avn GS co	1-102T	293.4	11,809 4	4	1	36	1	2	1	17		2	1	5
	2 aslt hel bn (TOE 1-155T) (each):														
154	HHC	1-156T	97.5	717.8	2	1	14		1	1	9		1	1	2
155	Atk hel co	1-157T	139.2	2,344.1	2	1	23		1	1	7	2	1	1	3
156	3 aslt hel co (each)	1-158T	174.4	4,143 1	2	1	11	5	1	1	7		1	1	5
	Aslt spt hel bn (TOE 1-165T):														
157	HHC	1-166T	71.2	514.9	2	1	9		1	1	5		1	1	1
158	3 aslt spt hel co (each)	1-167T	195.3	4,965.6	3	1	5		2	1	3		2	1	1
	Sig bn (TOE 11-205T):														
159	HQ, H&S co	11-206T	47.6	228.7	2	1	7		1	1	4		1	1	1
160	Comd op co	11-207T	136.0	682.8	5	1	24		2	1	12		2	1	2
	Engr bn (TOE 5-215T):														
161	HHC	5-216T	641.1	2,307.2	5	1	47	2	3	1	28	2	2	1	6
162	3 engr co (each)	5-217T	61.2	191.9	2	1	7		1	1	4		1	1	1
163	3 bde HHC (each)	67-42T	121.6	1,999.1	3	1	16		2	1	10	2	2	1	3

	Cav sqdn (TOE 17-95T):														
164	HHT	17-96T	276.7	2,384.4	4	1	33		2	1	17	2	2	1	4
165	3 air cav trp (each)	17-98T	141.9	3,929.4	3	1	23		2	1	7	4	2	1	5
166	Cav trp	17-99T	90.0	393.2	3	1	16		2	1	8		1	1	1
	Div arty (TOE 6-700T):														
167	HHB	6-701T	76.2	340.8	3	1	9		2	1	5		2	1	1
168	Avn btry	6-702T	99.1	2,276.5	2	1	23		1	1	11		1	1	3
	3 FA bn, 105-mm, towed (TOE 6-705T) (each):														
169	HQ, H&S btry	6-706T	90.3	408.9	3	1	12		2	1	7		1	1	1
170	3 FA btry (each)	6-707T	22.5	83.7	2	1	2		1	1	1		1	1	1
	FA bn, aerial FA (TOE 6-725T):														
171	HQ, H&S btry	6-726T	70.1	748.9	2	1	10		1	1	4	1	1	1	2
172	3 aerial FA brty (each)	6-727T	122.5	2,241.6	2	1	20		1	1	5	2	1	1	3
	DISCOM (TOE 29-41T):														
173	HHC & band	29-42T	69.5	286.6	3	1	8		2	1	5		2	1	1
174	Admin co	12-77T	183.3	728.5	7	2	8	1	3	2	5		3	1	2
	Maint bn (TOE 29-85T):														
175	HQ & main spt co	29-86T	208.5	945.0	4	1	20	1	2	1	12	1	2	1	2
176	3 fwd spt det (each)	29-87T	36.7	162.7	1	1	5		1	1	3		1	1	1
	Med bn (TOE 8-25T):														
177	HQ & spt co	8-26T	164.2	2,681.6	4	1	13	3	2	1	7	3	2	1	4
178	3 med co (each)	8-27T	25.2	76.3	2	1	2		1	1	1		1	1	1
	Sup bn (TOE 29-95T):														
179	HQ, H&S co	29-96T	229.7	1,119.9	3	1	27		2	1	15		1	1	3
180	Sup co	29-97T	201.7	966.0	4	1	24		2	1	14		2	1	2
181	QM aerial equip spt co	10-67T	284.2	1,076.9	2	4	21		1	3	10		1	1	3
	Trans acft maint and sup bn (TOE 55-405T):														
182	HHC	55-406T	67.0	523.3	2	1	11		1	1	6	1	1	1	1
183	4 trans acft maint and sup co (each).	55-407T	200.6	1,275.6	6	1	29	1	3	1	17	1	3	1	3

[2] Airlift requirements data on this unit are not available.

Table 6-35. Airlift Requirements—Field Army Units—Continued

c. Combat Units

	1	2	3	4	5	6	7	8	9	10	11	12	13	14	15
1	Unit	TOE	Wt of pers and equip		Acft requirements to move—										
					Pers	Bulk loaded items of equip	Major items of equip	Oversize/ overwt items of equip	Pers	Bulk loaded items of equip	Major items of equip	Oversize/ overwt items of equip	Pers	Bulk loaded items of equip	Major items of equip
			STON	MTON		Acft combination 1			Acft combination 2				Acft combination 3		
						C-130		C-5	C-141			C-5	C-5		
	Sep bde bases														
	Sep armd bde (TOE 17-100G):														
2	HHC	17-102G	344.8	1,544.4	5	1	35	1	3	1	19	-------	2	1	4
3	Armd cav trp	17-107G	441.2	1,075.1	3	1	13	3	2	1	8	3	2	1	5
4	Engr co*	5-127G	885.8	2,567.0	5	1	29	5	2	1	23	-------	2	1	9
	Spt bn (TOE 29-75G):														
5	HHD	29-76G	70.1	351.6	2	1	10	-------	1	1	6	-------	1	1	1
6	Admin co	12-177G	688.0	263.9	3	1	5	1	2	1	3	-------	1	1	1
7	Med co	8-147G	188.6	905.7	3	1	21	-------	2	1	12	-------	2	1	3
8	S&T co	29-77G	674.4	3,067.4	3	1	64	-------	2	1	33	2	2	1	8
9	Maint co	29-79G	702.8	2,883.2	5	1	40	-------	3	1	24	4	2	1	7
	FA bn, 155-mm, SP (TOE 6-375G):														
10	HHB	6-376G	272.7	1,156.2	3	1	24	-------	2	1	14	1	2	1	3
11	3 FA btry (each)	6-367G	234.0	672.7	2	1	8	2	1	1	5	2	1	1	3
12	Svc btry	6-369G	404.9	1,667.0	2	1	34	1	1	1	20	1	1	1	5
	Sep inf bde (TOE 7-100G):														
13	HHC	7-102G	298.5	1,540.1	5	1	35	1	2	1	19	1	2	1	4
14	Armd cav trp	17-107G	441.2	1,075.1	3	1	13	3	2	1	8	3	2	1	5
15	Avn co	1-47G	185.0	886.7	3	1	18	-------	2	1	11	1	2	1	2
16	Engr co*	5-107G	887.2	2,629.8	5	1	32	-------	2	1	23	4	2	1	9
	Spt bn (TOE 29-135G):														
17	HHD	29-76G	70.1	351.6	2	1	10	-------	1	1	6	-------	1	1	1
18	Admin co	12-177G	688.0	263.9	3	1	5	1	2	1	3	-------	1	1	1
19	Med co	8-147G	188.6	905.7	3	1	21	-------	2	1	12	-------	2	1	3
20	S&T co	29-77G	674.4	3,067.4	3	1	64	-------	2	1	33	2	2	1	8
21	Maint co	29-99G	825.8	3,641.5	5	1	48	-------	3	1	29	4	2	1	9
	FA bn, 105-mm, towed (6-185G):														

22	HQ, H&S btry	6-186G	356.9	1,756.6	4	1	40	1	2	1	23	1	2	1	4
23	3 FA brty (each)	6-157G	147.0	728.0	2	1	17		1	1	10		1	1	2
	Sep inf bde (mech (TOE 37-100G):														
24	HHC	37-102G	344.3	1,548.1	5	1	35	1	3	1	19	1	2	1	4
25	Armd cav trp	17-107G	441.2	1,075.1	3	1	13	3	2	1	8	3	2	1	5
26	Engr co*	5-127G	885.8	2,567.0	5	1	29	5	2	1	23		2	1	9
	Spt bn (TOE 29-75G):														
27	HHD	29-76G	70.1	351.6	2	1	10		1	1	6		1	1	1
28	Admin co	12-177G	688.0	263.9	3	1	5	1	2	1	3		1	1	1
29	Med co	8-147G	188.6	905.7	3	1	21		2	1	12		2	1	3
30	S&T co	29-77G	674.4	3,067.4	3	1	64		2	1	33	2	2	1	8
31	Maint co	29-79G	702.8	2,883.2	5	1	40		3	1	24	4	2	1	7
	FA bn, 155-mm, SP (TOE 6-375G):														
32	HHB	6-376G	272.7	1,156.2	3	1	24		2	1	14	1	2	1	3
33	3 FA btry (each)	6-367G	234.0	672.7	2	1	8	2	1	1	5	2	1	1	3
34	Svc btry	6-369G	404.9	1,667.0	2	1	34	1	1	1	20	1	1	1	5
	Sep abn bde (TOE 57-100G):														
35	HHC	57-102G	233.5	2,931.3	5	1	32		3	1	18	2	2	1	4
36	Armd cav trp	17-127G	208.6	712.2	3	1	18	1	2	1	10	1	2	1	2
37	Engr co	5-137G	199.1	730.9	3	1	17		2	1	10		2	1	2
	Spt bn (TOE 29-105G):														
38	HHD	29-106G	37.8	182.0	2	1	6		1	1	3		1	1	1
39	Admin co	12-167G	53.6	218.2	2	1	6		1	1	3		1	1	1
40	Med co	8-167G	87.7	424.4	2	1	13		1	1	8		1	1	1
41	S&S co	29-107G	294.9	1,075.5	3	2	21	1	2	2	13	1	2	1	3
42	Maint co	29-109G	151.7	735.9	3	1	20		2	1	11		2	1	2
	FA bn, 105-mm, towed (TOE 6-215G):														
43	HQ, H&S btry	6-216G	168.6	796.4	3	1	23		2	1	13		2	1	2
44	3 FA btry (each)	6-217G	79.3	398.6	2	1	12		1	1	7		1	1	1
	Sep lt inf bde (TOE 77-100G):														
45	HHC	77-102G	219.6	1,712.9	5	1	36		2	1	20		2	1	3
46	Armd cav trp	17-117G	216.1	744.3	3	1	19		2	1	10	1	2	1	2
47	Engr co	5-207G	409.5	1,402.7	3	1	29	1	2	1	20		2	1	4
	Spt bn (TOE 29-245G):														
48	HHD	29-246G	36.6	180.3	2	1	6		1	1	3		1	1	1
49	Admin co	12-197G	54.0	220.2	2	1	6		1	1	3		1	1	1
50	Maint and sup co	29-247G	532.9	2,356.0	5	1	48	1	2	1	29		2	1	6
51	Med co	8-197G	82.3	403.1	2	1	13		1	1	7		1	1	1

* When equipped with mobile assault bridge.

Table 6-35. Airlift Requirements—Field Army Units—Continued

c. Combat Units—Continued

1	Unit	TOE	Wt of pers and equip		Acft requirements to move—										
					Pers	Bulk loaded items of equip	Major items of equip	Oversize/ overwt items of equip	Pers	Bulk loaded items of equip	Major items of equip	Oversize/ overwt items of equip	Pers	Bulk loaded items of equip	Major items of equip
			STON	MTON	Acft combination 1				Acft combination 2				Acft combination 3		
						C-130		C-5	C-141		C-5		C-5		
	FA bn, 105-mm, towed (TOE 6-115G):														
52	HQ, H&S btry	6-116G	287.9	1,389.9	4	1	37		2	1	21		2	1	3
53	3 FA btry (each)	6-117G	181.3	912.5	2	1	23		1	1	13		1	1	2
	Inf units														
	Inf bn, sep inf bde (TOE 7-15G):														
54	HHC	7-16G	380.5	1,851.7	6	1	48	1	3	1	27	1	2	1	5
55	3 rifle co (each)	7-18G	53.4	175.2	4	1	6		2	1	3		2	1	1
56	Cbt spt co	7-28G	113.9	573.2	3	1	18		2	1	13		2	1	3
	Inf bn, inf div (TOE 7-15H):														
57	HHC	7-16H	294.7	1,461.5	3	1	33	1	2	1	20	1	2	1	4
58	3 rifle co (each)	7-18H	44.7	138.5	3	1	4		2	1	2		2	1	1
59	Cbt spt co	7-28H	107.8	541.2	3	1	17		2	1	9		2	1	2
	Inf bn, abn div and sep abn bde (TOE 7-35G):														
60	HHC	7-36G	213.0	1,029.2	5	1	28		3	1	16		2	1	2
61	3 rifle co (each)	7-37G	29.9	41.9	4	1	1		2	1	1		2	1	1
	Inf bn (mech), sep armd bde and sep inf bde (mech) (TOE 7-45G):														
62	HHC	7-46G	621.4	2,261.6	6	1	40	2	3	1	24	2	3	1	6
63	3 rifle co (each)	7-47G	226.1	533.2	4	1	16	1	2	1	8	1	2	1	2
64	Cbt spt co	7-48G	247.8	798.4	3	1	18	1	2	1	11	1	2	1	3
	Inf bn (mech, armd, inf, and inf (mech) div (TOE 7-45H):														
65	HHC	7-46H	488.9	1,833.0	3	1	30	2	2	1	18		2	1	5
66	3 rifle co (each)	7-47H	249.6	604.4	4	1	17	1	2	1	9		2	1	3
67	Cbt spt co	7-48H	243.0	777.2	3	1	18	1	2	1	10		2	1	3

	Inf bn, ambl div (TOE 7-55T):														
68	HHC	7-56T	38.0	119.1	3	1	3		2	1	2		1	1	1
69	3 rifle co (each)	7-57T	22.8	8.3	3	1	1		2	1	1		2	1	1
70	Cbt spt co	7-58T	33.7	102.6	3	1	4		1	1	2		1	1	1
71	Abn inf ranger co	7-157G	164.8	748.4	4	1	19		2	1	12		2	1	2
	Inf bn, sep lt inf bde (TOE 7-175G):														
72	HHC	7-176G	109.3	496.0	3	1	12		2	1	7		2	1	2
73	3 rifle co (each)	7-177G	29.6	56.5	3	1	2		2	1	1		2	1	1
74	Cbt spt co	7-178G	75.1	304.1	3	1	10		2	1	6		2	1	1
	Armor units														
	Tk bn, sep armd, inf, and inf (mech) bde (TOE 17-35G):														
75	HHC	17-36G	1,080.1	3,202.1	6	1	49	5	3	1	29	5	3	1	10
76	3 tk co (each)	17-37G	929.4	1,659.6	2	1	4	9	1	1	3	9	1	1	10
	Tk bn, armd, inf, and inf (mech) div (TOE 17-35H):														
77	HHC	17-36H	586.9	1,529.7	3	1	22	4	2	1	13	4	2	1	6
78	3 tk co (each)	17-37H	929.2	1,660.0	2	1	4	9	1	1	3		1	1	10
79	Svc spt co	17-39H	575.3	1,978.8	3	1	34	2	1	1	20	2	1	1	6

d. Combat Support Units

1	Unit	TOE	Wt of pers and equip		Acft requirements to move—										
					Pers	Bulk loaded items of equip	Major items of equip	Oversize/ overwt items of equip	Pers	Bulk loaded items of equip	Major items of equip	Oversize/ overwt items of equip	Pers	Bulk loaded items of equip	Major items of equip
			STON	MTON	Acft combination 1				Acft combination 2				Acft combination 3		
					C-130			C-5	C-141			C-5	C-5		
	FA units														
2	HHB, corps arty	6-501G	285.1	1,359.6	4	1	34	1	2	1	19	1	2	1	3
3	HHB, FA gp	6-401G	155.7	741.9	3	1	22		2	1	12		1	1	2
	FA bn, 155-mm, towed (TOE 6-425G):														
4	HHB	6-426G	135.1	663.7	3	1	19	1	1	1	10		1	1	2
5	FA btry	6-427G	205.8	867.7	2	1	19		1	1	11		1	1	3

Table 6-35. Airlift Requirements—Field Army Units—Continued

d. Combat Support Units—Continued

1	Unit	TOE	Wt of pers and equip		Acft requirements to move—										
					Pers	Bulk loaded items of equip	Major items of equip	Oversize/ overwt items of equip	Pers	Bulk loaded items of equip	Major items of equip	Oversize/ overwt items of equip	Pers	Bulk loaded items of equip	Major items of equip
			STON	MTON	Acft combination 1				Acft combination 2				Acft combination 3		
						C-130		C-5	C-141			C-5	C-5		
	FA bn, 175-mm, SP (TOE 6-435G):														
6	HHB	6-436G	158.9	786.5	3	1	24		2	1	12	1	1	1	2
7	FA btry	6-437G	260.8	924.8	2	1	13	2	1	1	7	2	1	1	3
8	Svc btry	6-439G	265.4	1,073.0	2	1	21	1	1	1	13	1	1	1	3
	FA bn, 8-in, SP (TOE 6-445G):														
9	FA btry	6-447G	275.9	918.2	2	1	14	2	1	1	8		1	1	3
10	Svc btry	6-449G	258.6	949.7	2	1	18		1	1	11	1	1	1	3
	FA bn, 155-mm, SP (TOE 6-455G):														
11	HHB	6-456G	159.2	726.2	3	1	21		2	1	11	1	1	1	2
12	Svc btry	6-459G	250.7	1,045.8	2	1	21	1	1	1	12	1	1	1	3
	FA bn, HJ (TOE 6-525G):														
13	HQ, H&S btry	6-526G	224.8	1,067.8	3	1	26		2	1	15	1	2	1	3
14	FA btry	6-527G	239.0	1,166.3	2	1	17	1	1	1	10		1	1	3
	FA bn, SGT (TOE 6-555G):														
15	HQ, H&S btry	6-556G	477.6	2,401.8	4	1	40	2	2	1	23	2	2	1	6
16	FA btry	6-557G	211.9	956.1	2	1	19	1	1	1	11	1	1	1	3
	FATAB (TOE 6-575G):														
17	HHB	6-576G	297.1	1,465.9	4	1	31		2	1	18	1	2	1	4
18	FA tgt acq btry	6-577G	242.0	1,252.1	4	1	27		2	1	15	1	2	1	3
	FA bn, PSG (TOE 6-615G):														
19	HHB	6-616G	328.3	1,479.2	4	1	32	1	2	1	19	1	2	1	4
20	FA btry	6-617G	714.1	3,249.9	5	1	51		3	1	29	3	3	1	8
21	Svc btry	6-619G	816.6	3,594.5	6	1	51	3	3	1	30	3	3	3	8
	ADA units														
22	HHB, ADA bde	44-2G	123.6	596.7	2	1	15		1	1	8		1	1	2

23	HHB, ADA gp	44–12G	141.2	714.2	2	1	17	-------	1	1	10	-------	1	1	2
	ADA AW bn, SP (TOE 44–85G):														
24	HHB	44–86G	246.1	1,053.0	3	1	22	-------	2	1	13	1	1	1	3
25	ADA AW btry	44–87G	467.5	1,328.5	3	1	12	-------	2	1	7	4	2	1	5
	ADA bn, Hawk, mbl (TOE 44–235G):														
26	HHB	44–236G	485.6	2,281.0	4	1	46	-------	2	1	27	1	2	1	6
27	ADA btry	44–237G	407.9	2,018.4	3	1	38	-------	2	1	21	1	1	1	5
	ADA bn, HERC (TOE 44–535G):														
28	HHB	44–536G	1,439.8	6,834.4	5	1	102	5	3	1	64	-------	2	1	16
29	ADA btry	44–537G	341.7	1,474.9	3	1	22	-------	2	1	14	1	2	1	3
	Avn units														
30	Corps avn co	1–127G	266.3	3,276.1	3	1	17	-------	1	1	10	2	1	1	4
31	Survl airplane co	1–128G	493.7	21,717.0	4	1	29	-------	2	1	18	2	2	1	4
32	Army avn co	1–137G	259.2	5,918.7	3	1	17	-------	2	1	10	2	2	1	4
	Cml units														
33	HHD, cml gp	3–32G	32.6	152.4	1	1	5	-------	1	1	3	-------	1	1	1
34	HHD, cml smoke genr bn	3–266G	24.3	109.7	1	1	3	-------	1	1	2	-------	1	1	1
35	Cml smoke genr co	3–267G	216.2	1,103.2	3	1	28	-------	2	1	16	-------	2	1	3
	Engr units														
36	HHC, engr cbt bde, army	5–101G	81.7	317.2	3	1	9	-------	2	1	5	-------	2	1	1
37	HHC, engr cbt bde, corps	5–101G	84.8	671.1	2	1	10	1	1	1	6	-------	1	1	2
38	HHC, engr amph bde	5–401G	132.5	671.8	2	1	17	-------	1	1	10	-------	1	1	2
39	HHC, engr amph gp	5–402G	124.8	634.9	2	1	17	-------	1	1	10	-------	1	1	2
	Engr cbt bn, army or corps (TOE 5–35G):														
40	HHC	5–36G	720.8	2,514.8	5	1	37	-------	2	1	26	2	2	1	7
41	Engr cbt co	5–37G	492.8	1,568.7	3	1	26	2	2	1	20	-------	2	1	5
	Engr topo bn, army (TOE 5–305G):														
42	HHC	5–306G	251.7	1,195.7	3	1	24	1	2	1	14	1	2	1	3
43	Engr map repro and distr co.	5–307G	301.6	1,489.6	3	1	13	2	1	1	8	-------	1	1	4
44	Engr map co	5–308G	183.1	927.1	2	1	7	2	1	1	4	-------	1	1	2
	Engr amph bn (TOE 5–405G):														
45	HHC	5–406G	412.6	1,810.4	5	1	31	2	3	1	18	2	2	1	5
46	Engr amph aslt co	5–407G	118.6	476.8	3	1	6	1	2	1	4	-------	1	1	2

Table 6-35. Airlift Requirements—Field Army Units—Continued

d. Combat Support Units—Continued

1	Unit	TOE	Wt of pers and equip		Acft requirements to move—										
					Pers	Bulk loaded items of equip	Major items of equip	Oversize/ overwt items of equip	Pers	Bulk loaded items of equip	Major items of equip	Oversize/ overwt items of equip	Pers	Bulk loaded items of equip	Major items of equip
			STON	MTON	Acft combination 1				Acft combination 2				Acft combination 3		
						C-130		C-5	C-141			C-5	C-5		
47	Engr aslt brg co, mbl	5-64G	416.8	1,487.2	4	1	22	2	2	1	16	1	2	1	4
48	Engr pnl brg co	5-77G	612.1	1,840.9	3	1	33	2	1	1	19	----	1	1	6
49	Engr dptrk co	5-124G	624.2	1,902.5	2	1	52	----	1	1	25	1	1	1	6
50	Engr topo co, corps	5-327G	466.2	2,388.0	3	1	24	4	2	1	14	4	1	1	5
	Sig units														
	Corps sig bn (TOE 11-15G):														
51	HHC	11-16G	411.0	2,822.2	5	1	39	2	2	1	22	2	2	1	6
52	Comd op co (main or altn)	11-17G	420.9	1,927.6	5	1	45	----	2	1	27	----	2	1	5
53	Comd RADREL and cable co.	11-18G	833.4	4,196.3	6	1	98	1	3	1	58	----	3	1	10
	Sig army area bn (TOE 11-85G):														
54	HHC	11-86G	214.0	1,117.7	2	1	24	----	1	1	14	1	1	1	3
55	Sig army area co	11-87G	397.3	1,911.3	3	1	44	----	2	1	26	1	2	1	5
	Army comd sign op bn (TOE 11-95G):														
56	HHC	11-96G	399.2	5,584.7	4	1	39	1	2	1	22	----	2	1	5
57	Tel op co	11-97G	355.1	1,525.4	4	1	25	2	2	1	15	2	2	1	4
58	COMMCEN co	11-98G	366.0	1,666.7	5	1	27	2	3	1	15	----	2	1	4
59	Sig op co, mdm HQ	11-127G	432.4	2,015.4	4	1	38	1	2	1	21	1	2	1	5
60	Sig small HQ op co	11-147G	295.5	1,420.8	2	1	32	1	1	1	19	1	1	1	4

Table 6-35. Airlift Requirements—Field Army Units—Continued

e. Combat Service Support Units

1	Unit	TOE	Wt of pers and equip		Acft requirements to move—										
					Pers	Bulk loaded items of equip	Major items of equip	Oversize/ overwt items of equip	Pers	Bulk loaded items of equip	Major items of equip	Oversize/ overwt items of equip	Pers	Bulk loaded items of equip	Major items of equip
			STON	MTON	Acft combination 1				Acft combination 2				Acft combination 3		
						C-130		C-5	C-141			C-5	C-5		
	Ammo units														
2	HHC, ord gp, ammo, DS/GS	9-22G	118.0	525.7	2	1	11		1	1	6	1	1	1	2
3	HHC, ord bn, ammo, DS/GS	9-36G	169.9	672.7	2	1	10	1	1	1	6		1	1	2
4	Ord co, ammo, convl, DS/GS	9-38G	870.9	2,677.1	6	1	26	6	3	1	23	4	3	1	9
5	Ord sp ammo DS co	9-47G	714.0	2,913.4	5	1	45	3	3	1	27	2	3	1	7
6	Ord sp ammo co, GS/DS	9-48G	599.3	2,711.5	3	1	40	3	2	1	25	2	2	1	6
7	Ord co, GM GS maint	9-59G	885.4	4,583.4	5	2	39	6	3	1	23	6	2	1	10
	Fin unit														
8	Fin DS co	14-17G	47.4	157.9	2	1	3		1	1	2		1	1	1
	Maint units														
9	HHD, maint DS or GS bn, army.	29-136G	58.3	263.2	2	1	8		1	1	5		1	1	1
10	Tire rep co	9-117G	312.9	1,630.3	3	1	21	2	2	1	15	2	2	1	4
11	LE GS maint co, army	29-134G	591.0	2,989.2	5	1	34	3	3	1	20	3	2	1	7
12	Hv equip GS maint co, army	29-137G	714.9	3,387.5	5	1	31	6	3	1	17	5	3	1	8
13	Lt maint co, DS	29-207G	483.8	2,259.9	4	1	35	2	2	1	21		2	1	5
14	Trans acft DS co	55-457G	739.2	4,049.5	5	2	37		3	1	21	5	2	1	8
15	Trans acft maint GS co	55-458G	613.1	3,231.8	5	1	29	4	3	1	17	4	3	1	7
	Med units														
16	HHD, med gp (type A)	8-122G	30.0	128.7	1	1	4		1	1	3		1	1	1
17	Cbt spt hosp	8-123T	234.2	1,085.2	3	1	25		2	1	14		2	1	3
18	Med amb co	8-127G	297.9	1,591.9	2	1	40		1	1	21		1	1	6
19	Med coll co	8-129G	48.3	145.3	4	1	4		2	1	3		2	1	1
20	Med air amb co	8-137G	347.3	5,821.3	4	1	22	7	2	1	13	7	2	1	8
21	MASH	8-571G	149.0	692.9	3	1	16		1	1	9		1	1	2
22	Evac hosp	8-581G	254.6	1,059.2	6	1	23		3	1	13		3	1	3

Table 6-35. Airlift Requirements—Field Army Units—Continued

e. Combat Service Support Units—Continued

1	Unit	TOE	Wt of pers and equip		Acft requirements to move—										
					Pers	Bulk loaded items of equip	Major items of equip	Oversize/ overwt items of equip	Pers	Bulk loaded items of equip	Major items of equip	Oversize/ overwt items of equip	Pers	Bulk loaded items of equip	Major items of equip
			STON	MTON	Acft combination 1				Acft combination 2				Acft combination 3		
					C-130			C-5	C-141			C-5	C-5		
	Pers and admin svc units														
23	HHD, P&A bn	12-66G	37.4	153.1	1	1	5		1	1	3		1	1	1
24	HHD, repl bn	12-56G	90.5	667.7	2	1	12		1	1	7		1	1	2
	S&S units														
25	HHC, S&S bn	29-146G	112.2	532.1	2	1	10	1	1	1	6	1	1	1	2
26	QM airdrop sup co	10-407G	613.8	2,165.0	7	2	35		3	2	21	1	3	1	6
27	Fld svc co, GS, fwd	29-114G	416.1	1,802.2	4	1	37		2	1	21	1	2	1	5
28	Gen sup co, GS	29-118G	782.5	3,335.7	5	1	30		3	1	16	5	2	1	9
29	Fld svc co, GS, army	29-124G	435.8	1,853.9	6	1	36	1	3	1	21	1	3	1	5
30	Hv mat sup co, GS	29-127G	618.3	1,976.0	4	1	20	5	2	1	17	4	2	1	6
31	Invt con co, FASCOM	29-402G	99.1	320.5	5	1	7	1	2	1	4		2	1	1
	Trans units														
32	HHC, trans bde, FASCOM or COSCOM.	55-62G	74.5	314.4	3	1	9		2	1	5		1	1	1
33	HHD, trans MCC	55-6G	115.5	569.9	3	1	17		2	1	9		2	1	2
34	HHD, TMT bn	55-16G	29.5	126.9	1	1	4		1	1	3		1	1	1
35	Trans lt trk co (2-1/2-ton)	55-17G	576.3	2,844.3	3	1	68	1	2	1	39		2	1	7
36	Trans mdm trk co (stlr, cgo, 12-ton).	55-18G	1,072.7	3,949.6	3	1	124	1	2	1	62	1	2	1	11
37	Trans car co, SUPCOM	55-19G	143.7	668.3	2	1	21	1	1	1	11		1	1	2
38	Trans hv trk co	55-28G	1,239.7	3,925.9	3	1	8	15	2	1	5	15	2	1	15
39	Trans lt-mdm trk co	55-67G	823.0	3,765.3	4	1	97	1	2	1	53	1	2	1	10
40	Trans tml trf co	55-118G	663.0	2,145.3	5	1	27	4	3	1	15		2	1	6

disassembled, may be transported by C–5 aircraft.)

(*f*) In selecting aircraft or combinations of aircraft to transport a unit, the planner must carefully consider the primary mission of the unit and the requirement for the unit in the objective areas. During the initial stages of an airborne assault, units transported to the objective area will use a combination of parachute and assault aircraft. Following the initial assault, and after units have prepared landing facilities, medium transport aircraft can perform in an airlanded role. When facilities are developed sufficiently to handle heavy transport aircraft, units requiring this means of transportation can come into the objective area.

(3) *Tabulated requirements.* In table 6–35, when combinations of units are moved, savings on total aircraft requirements can be accomplished. This table does not reflect this saving; it reflects the minimum aircraft necessary to move each indicated unit of company size, independent of any other unit.

6–42. Air Terminals

a. General. Air terminals provide facilities for loading and unloading aircraft and for in-transit handling of personnel and cargo moved by aircraft.

b. Responsibilities.

(1) *USAF.* The USAF selects, prepares, and operates air terminals, exclusive of airfields or landing areas operated by and for Army aviation units.

(2) *Army.* The Army provides engineer service support to air terminals, to include construction and maintenance other than repairs and utilities. The Army also may provide personnel to assist the USAF in the loading and unloading responsibility.

c. Operations.

(1) *General.* The theater air force provides aerial port squadrons to operate air terminals. Theater army may establish facilities and station personnel at an air terminal in a tenant status to perform those functions agreed on by the theater army and theater air commanders.

(2) *Aerial port squadrons.* An aerial port squadron is a cellular-type USAF organization. The assigned mission determines its use and its strength. These units provide passenger and cargo-handling capabilities, to include manifesting, warehousing, loading, unloading, tiedown, preparation for air delivery, ejection in flight, and a pathfinder mission. One aerial port squadron can perform any one of the following tasks:

(*a*) Handle 480 tons of cargo per 8-hour day in an air-landed operation.

(*b*) Rig for delivery by parachute and load 280 tons of cargo per 8-hour day when the packing of parachutes is not required.

(*c*) Rig for delivery by parachute, pack parachutes, and load 112 tons of cargo per 8-hour day.

(3) *Quartermaster airdrop supply companies (TOE 10–407).* Quartermaster airdrop supply companies are stationed at selected air terminals or at Army logistic installations to prepare cargo for parachute or free-drop delivery. (TOE 10–407 and FM 101–10–2 list the capabilities of this company.)

(4) *Volume.* The volume of cargo and passenger traffic at an Army airfield may require assignment of a unit to perform these operations. Units that may be employed include the quartermaster airdrop supply company, teams from TOE 10–500, the transportation terminal transfer company (TOE 55–118), or the transportation contract supervision detachment and the cargo documentation section from TOE 55–550.

d. Airfield Capabilities.

(1) The following criteria establish the maximum number of aircraft that can be based on an airfield or a landing strip. Dispersion requirements may dictate decreased utilization of such facilities.

(*a*) Improved airfields in rear of the combat zone can serve as a base for a maximum of two wings. Under good weather conditions, aircraft land or take off at 3-minute intervals, and 1 hour on the ground is required for each landing for necessary servicing, reloading, and inspection.

(*b*) Unimproved airfields and landing strips in rear of the combat zone can serve as a base for approximately one wing.

(*c*) Transport aircraft normally are not based in the combat zone. On airfields in the combat zone, aircraft land or take off at 3-minute intervals under good weather conditions, and the time required on the ground is reduced to 30 minutes. Service and maintenance are limited to emergency requirements only, and the tactical situation normally does not permit more time than that required for actual unloading and reloading.

Table 6-36. TOE Items Transportable by C-5 Only

a. Items Too Heavy for C-130 or C-141 Aircraft

1	1 LIN	2 Item	3 Weight (STON)	4 Dimensions (ft) Length	5 Width	6 Height
2	E56577	CEV, full-tracked (T118E1)	53 0	26.0	12.2	10.9
3	L43664	Lchr, M60-series tk chassis, trans 40- and 60-ft brg, type cl-60	41.5	39.0	12 0	7.9
4	R50680	Recov veh, full-tracked, mdm (M88)	54.0	27.2	11.5	9 9
5	V12826	Tk, cbt, full-tracked, 76-mm gun (M41A1)	43.1	30.7	10.7	9.5
6	V13100	Tk, cbt, full-tracked, 105-mm gun (M60)	48.5	26.7	11.9	10.3

b. Items Too Large for C-130 or C-141 Aircraft

1	1 LIN	2 Item	3 Weight (STON)	4 Dimensions (ft) Length	5 Width	6 Height
2	C20414	Brg, armd-veh-launched, scissor-type, cl-60, aluminum, 60-ft long	15.4	36.3	13.2	13.3
3	C22469	Brg, ferry unit, end bay, amph, mbl, fltg, aslt	9.7	37.0	12 0	11.7
4	C22606	Brg, ferry unit, interior bay, amph, mbl, fltg, aslt	7.2	26.0	12.0	10.5
5	C25620	Brg, fltg, mbl, aslt, amph	26 6	36.1	10.0	10 3
6	F39241	Crane, wheel-mtd, 5-ton, 3/8-cu yd, diesel, 4×4, rough terrain	14.5	23 1	10.0	11.0
7	F39378	Crane, wheel-mtd, 20-ton, 3/4-cu yd, rough terrain	30.5	28 5	11.5	12.3
8	J30766	Genr and chg plant, acetylene, stlr-mtd, 750 cfh	15.6	33 4	8.4	11.4
9	J97230	Gun, FA, SP, 175-mm (M107)	26.4	37.2	10.5	9.3
10	K56981	How, hv, SP, 8-in (M110)	26 8	22 1	10.5	9.3
11	K57666	How, mdm, SP, 155-mm (M109)	24.7	20 0	10 8	9.2
12	K57255	How, lt, SP, 105-mm (M108)	22.7	20 1	10.8	9.2
13	R11462	Ramp, loading, veh, mbl, aslt, amph, fltbrg	27.1	39 3	10.0	11.7
14	R50543	Recov veh, full-tracked, lt, armd (M578)	23.8	21.8	10.5	9.7
15	S70791	Stlr, low-bed, 60-ton, 8-wheel, with equip	16.8	36 8	12.0	6.8
16	S73394	Stlr, tk trans, 50-ton, 8-wheel, with equip	21.2	38.5	12.2	8.8
17	S74490	Stlr, van, expansible, 6-ton, 4-wheel, with equip	7.5	26.9	8.2	11.2
18	W76816	Trac, full-tracked, low-spd, diesel, hv DBP, with bulldozer, with scarifier winch	22.0			
19	X59600	Trk, trac, 10-ton, 6×6, with dual midship winch, with high-mtd 5th wheel, with equip	14.5	24.1	9.5	9.3

(2) For transport aircraft use, airfields in rear of the combat zone should be operational day and night. Airfields in the combat zone may be operational during daylight hours only, depending on the enemy air capabilities.

(3) The capabilities of aerial port squadrons also influence traffic potential of airfields.

6-43. Air Movement of Materiel

a. General. Supplies may be airdropped or air landed. Airdrop methods include container loads prepared for high- or low-velocity rates of descent and free fall and platform loads. Container loads are limited to supply items and to individual container weights between 250 and 2,200 pounds. Platform loads may consist of supplies or equipment. The smallest platform is 9 feet wide by 8 feet long. All airdrop platforms must be loaded to meet a minimum weight of 35 pounds per square foot. The maximum platform weight, using current standard procedures, is 25,000 pounds. Free-fall techniques are limited to smaller loads capable of withstanding extremely high ground-impact forces.

b. Airlift Capabilities. The payload capacity of each aircraft related to the mission-flight profile and other affecting variables is provided by the supporting airlift commander. The supported commander is not responsible for computing payload capacities and he is not expected to do so. Airdrop capabilities are controlled by the airdrop system's limitations, not by the payload of the aircraft. Thus, the 25,000-pound limit for airdrop is related to the airdrop system, not to the aircraft.

6–44. Army Aircraft

a. General. Both fixed-wing and rotary-wing Army aircraft are employed to move cargo, personnel, and equipment. Performance standards are affected by many variables, such as load/fuel, altitude, temperature, humidity, existing weather, airfield characteristics, and individual aircraft characteristics. The weight-lifting capabilities of all aircraft are particularly dependent on air density or density altitude, which is composed of three variables—pressure, temperature, and humidity. As air density decreases, lift capability decreases. Wind can materially affect operations; and in operations requiring long ranges or maximum lift capabilities, wind may become a critical factor. Payloads may be increased or decreased because of variations in radius or range, density, altitude, and wind velocity. The Army aviation staff officer should be consulted for accurate, detailed computations to meet specific requirements.

b. Rotary-Wing Aircraft.

(1) *General.* Army rotary-wing aircraft (helicopters) are limited in speed and range compared with fixed-wing aircraft. However, their capability to land and take off vertically permits the delivery and evacuation of personnel and materiel to and from areas of operations inaccessible to fixed-wing aircraft. Likewise, their capability for flight at relatively slow speeds permits continued operations under weather conditions of low ceiling and restricted visibility. Their capability to haul external loads also is advantageous under most conditions.

(2) *Planning factors (rotary wing).*

(*a*) *Availability.* The number of helicopters available for a mission at any time depends on the status of maintenance and inspections on the helicopters in the unit. Experience indicates that two-thirds (67 percent) of the helicopters assigned to a unit are available for flying during continuous operations. Normally, a higher percentage of assigned aircraft will be operational for missions of short duration, depending on variables such as previous operational commitments, status of maintenance and inspections, type of aircraft, availability of repair parts, and operational environment.

(*b*) *Cargo.* The dimensions of cargo are restricted only by the size of the aircraft's cargo compartment doors and/or the system used to carry the cargo externally, assuming, of course, that the weight of the package or packages does not exceed the weight limitations for the aircraft under prevailing conditions (fig. 6–3, 6–4, and 6–5). Types of items of cargo for internal loading are boxes of rations, ammunition, signal equipment, vehicle and aircraft parts, and supplies. Loads too large to fit into the cargo compartment, but under the maximum weight permissible for external loads, may be carried slung under the helicopter to expedite loading and unloading.

(*c*) *Landing facilities.* Provisions must be made for adequate landing sites in planning helicopter movements. The minimum requirements for landing sites are as given below. However. larger areas with cleared approaches are highly desirable to improve safety margins of operation (table 7–31).

OH–23, OH–13, OH–6	18 meters by 18 meters
UH–1	28 meters by 28 meters
CH–47 and CH–54	46 meters by 64 meters

(*d*) *Maintenance.* Maintenance facilities should be provided at primary landing sites. The minimum requirement is for a sheltered area that provides adequate cover for organizational maintenance on the helicopters. For planning, 10.8 organizational maintenance man-hours per flying hour may be considered average for the CH–34, 15.6 hours for the CH–47, and 6.0 hours for all models of the UH–1-series aircraft.

(*e*) *Hours of operation.* The average number of hours of operation per day for extended periods should not exceed the daily equivalents of the annual flying hours' program contained in SB 1–1 for the type of helicopter employed.

(*f*) *Loading and unloading time.* The factors given below are for planning purposes and presume that the aircraft has been properly prepared for the personnel or cargo it is to transport. The times do not include palletizing general cargo

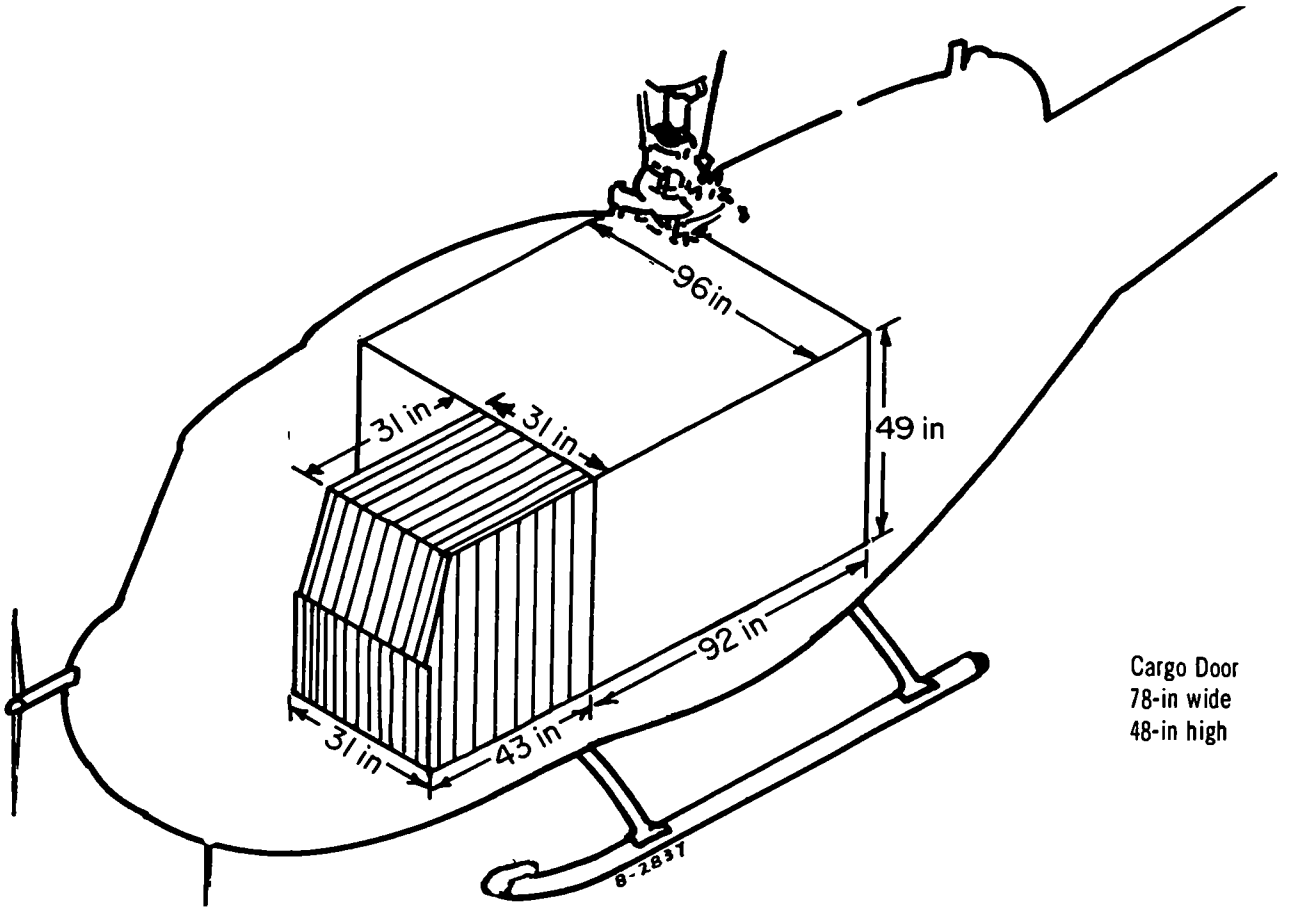

Figure 6–3. Iroquois (UH–1D/H).

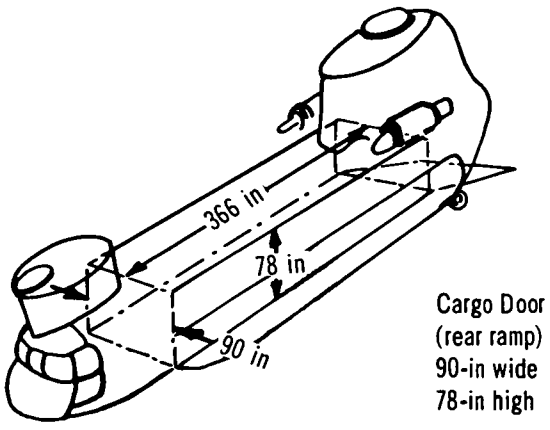

Figure 6–4. Chinook (CH–47A/B/C).

for internal loading or for rigging slings on cargo for external transport.

Personnel:	
Troops	3 minutes
Patients	10 minutes
Cargo internal in fuselage:	
Single vehicles	5 minutes
Vehicles with trailers	15 minutes
Palletized cargo (by hand)	20 minutes
Cargo suspended beneath helicopter:	
Hookup time only	30 seconds

(*g*) *Determination of transport helicopter requirements.*

1. Most helicopter operations will be of the short-haul type and may require that more than one-round trip (sortie) be flown in support of the movement.

2. To determine the number of helicopters or units required to accomplish a given mission or the capabilities of helicopters on a specific mission, the staff planner should use the following formulas:

$$N = \frac{HS}{D}, \text{ when—}$$

N = number of round trips (sorties per aircraft per day). This figure must be the resultant next lower whole number if a fraction is involved; a sortie must complete a round trip.*

S = average sortie speed of aircraft in knots. For planning, use cruising speed unless some other speed is specified.

*If service and fuel are available at both pickup and delivery points, one-half sortie can be computed as a lift. (A lift is the movement of a load from origin to destination.) This would require that the helicopters remain in the delivery point ares for service, which normally is undesirable.

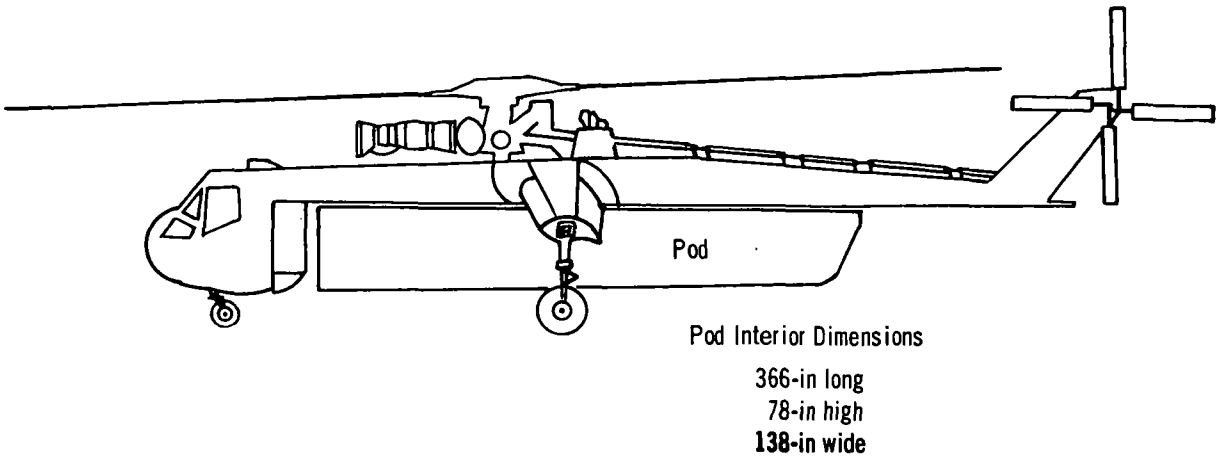

Figure 6-5. Flying Crane (CH-54).

D = round-trip distance in nautical miles. This distance must be the actual distance flown rather than the airline distance from origin to destination. If the airline distance is used, add 15 percent to obtain estimated flight distance.

H = number of operational hours available

$$O = \frac{T}{N \times P}, \text{ when—}$$

O = number of operational aircraft required or available daily

T = tonnage to be moved or tonnage that can be moved

P = payload of type of aircraft used
A = 1.5 × 0, when—

A = number of aircraft required or available to carry out a sustained operation. (This formula applies the daily availability factor (67 percent) to 0 to obtain A or to A to obtain 0.)

3. This method of determining helicopter requirements is particularly applicable to movement of supplies or troops when combat loading is not a consideration. The planner should use a planning worksheet to determine aircraft requirements for air-landed assault operations. He uses the planning worksheet to develop loads that provide for tactical integrity of the combat units and combat loading of each aircraft. The planner can use the method of determining aircraft requirements described herein to *estimate* requirements for assault operations by adding 10 percent to the unit personnel and equipment tonnage to allow for combat loading.

4. Examples.

(a) A division has been allocated 18 CH-34 helicopters for 3 days to assist in moving supplies from field army supply points to division distribution points. The actual round-trip flight distance is 80 nautical miles. The division G4 desires to know what the daily lift capacity of this helicopter company will be for this mission.

Solve first for N (number of sorties per aircraft per day):

$$N = \frac{HS}{D}, \quad N = \frac{4 \times 104}{80}$$

N = 5.2 or 5 sorties per day

Solve next for O (number of operational aircraft available):

O = 67 percent of A (18), or 12 operational aircraft per day

Solve for T (daily tonnage capability of available aircraft):

$$O = \frac{T}{N \times P}, \quad 12 = \frac{T}{5 \times 1.89}, \quad T = 113.4 \text{ STON per day}$$

(b) The field army G4 has a requirement to move 300 STON of cargo per day for 8 days from the field army service area to the 20th Infantry Division. Terrain and enemy action prohibit this movement by surface means. The G4 is computing the number of CH-34 and/or helicopter companies that will be required to accomplish this mission. The estimated flight distance from the 20th Infantry Division's distribution points is 28 nautical miles.

P = 1.89 STON

T = 300 STON

S = 104 knots

D = 56 nautical miles (round-trip distance)

$$N = \frac{4 \times 104}{56}, \quad N = 7.4 \text{ or } 7 \text{ (sorties per aircraft)}$$

$$O = \frac{300}{7 \times 1.89}, \quad O = 22.6 \text{ or } 23 \text{ (helicopters)}$$

$A = 1.5 \times 23$, $A = 35$ helicopters or approximately 2 companies of CH–34 helicopters

c. Fixed-Wing Aircraft.

(1) *General.* Army fixed-wing aircraft are limited in speed and range in comparison with larger transport-type aircraft. The capability of Army fixed-wing aircraft to land and take off from selected small, unprepared areas permits the delivery of personnel and materiel to and the evacuation from areas of operations inaccessible to larger aircraft. The capability of Army fixed-wing aircraft to fly slowly and to maintain a high degree of maneuverability further enhances their value in forward areas under combat conditions.

(2) *Planning factors (fixed wing).*

(*a*) *Availability.* The operation plan should be based on the availability of 75 percent of the assigned aircraft for sustained operations. A higher availability ratio of 95 percent may be obtained for operations of short duration (less than 6 days). This higher availability ratio will depend on the status of maintenance and inspections, repair parts, time available for maintenance, and skill of maintenance personnel.

(*b*) *Cargo.* Cargo may be delivered by three means—free fall, parachute, or air landing. The receiving unit normally requests the type of delivery to be used. The size and amount of cargo that may be loaded internally are governed by (fig. 6–6 and 6–7)—

1. Size of compartment door.

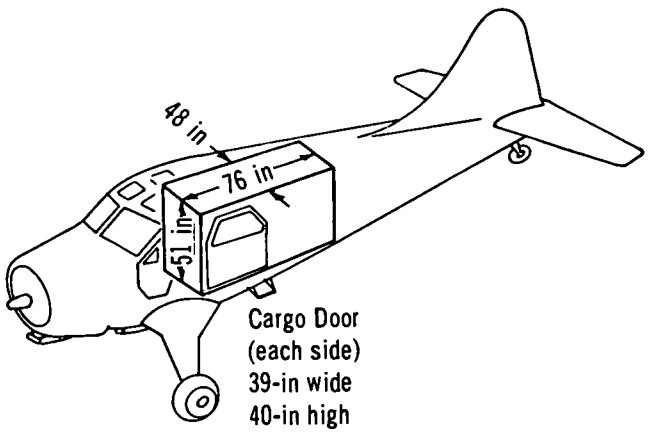

Figure 6–6. Beaver (U–6A).

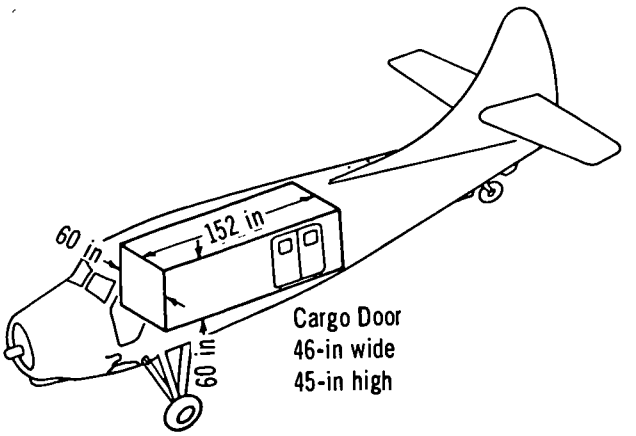

Figure 6–7. Otter (U–1A).

2. Compartment door location with respect to the cargo compartment.

3. Size of cargo compartment.

4. Lift capability of the aircraft used.

(*c*) *Landing facilities.* The development of a landing area adequate for prolonged operations or for accommodation of frequent traffic is a continuous operation. The planner must provide for an adequate landing area when planning aircraft movements. The minimum requirements for landing areas are indicated in table 6–37.

(*d*) *Maintenance.* Under normal climatic conditions, extensive facilities are not required for organizational maintenance. Special equipment and facilities are required for operation in extreme climatic conditions. Direct support field maintenance units are equipped for field operations under normal climatic conditions. Special considerations for equipment and facilities are required under extreme conditions. For man-hour requirements for aircraft maintenance, the planner should consult applicable publications.

(*e*) *Hours of operation.* Based on a sustained operation, average flying hours per airplane should not exceed the daily equivalents of the annual flying hours' program in SB 1–1.

(*f*) *Loading time.*

Personnel:

Troops—2 to 3 minutes (depending on type of aircraft)

Patients—10 minutes

Cargo:

Internal in fuselage (depending on type of cargo—10 to 30 minutes

Table 6-37. Minimum Landing Area Requirements

	1	2	3
1	Aircraft at maximum gross weight	No wind conditions at sea level over 15-m obstacle	
		Length (m)	Width (m)
2	O-1A	250	15
3	U-6A	370	20
4	U-8D	760	20
5	U-1A	460	20
6	OV-1A	900	20
7	U-9C	650	20
8	U-10A	200	15
9	U-21A	260	20
10	T-41B	200	20
11	T-42A	490	20

External beneath wings of airplane—10 minutes

(*g*) *Unloading time.*

Personnel:

Troops—1 minute
Patients—10 minutes

Cargo:

Internal in fuselage—5 minutes
External (air landed)—10 minutes
Parachute—30 seconds
Free fall—10 seconds

6-45. USAF Transport Aircraft in Joint Operations

a. FM 61-100, FM 100-5, FM 100-27, and FM 101-5 provide general considerations and procedures governing the employment of USAF transport aircraft in joint operations.

b. In planning for joint airborne operations, the commander and staff officer should be familiar with the following basic terms:

(1) *ACL (air)*—The weight of cargo in pounds that can be loaded into an aircraft for a specific mission. In an airborne operation, the USAF commander announces the ACL for each type of aircraft. The ACL of an aircraft varies with distance and certain other conditions. The greater the distance, the greater the weight of fuel and resultant reduced ACL. In radius operations, the ACL for the distance traveled for parachute operations may be greater than that for air-landed operations because of a necessary safety restriction of the total weight of the aircraft on landing. The ACL for an aircraft can be determined for any range or radius by referring to graphs provided for that purpose.

(2) *Radius of action*—The maximum distance to which an airplane can travel and return safely without refueling. Operations under radius conditions are those in which aircraft deliver troops or materiel at a destination and return without refueling.

(3) *Range*—The distance from the takeoff point to the point where an airplane delivers its cargo load (safety margin of reserve fuel included). Refueling is required to return to the original takeoff point.

c. TM 55-450-15 contains a general description of the various types of military aircraft and their technical characteristics and performance data, to include cargo-distance graphs; cargo compartment dimensions; and troop transport, litter transport, parachutist, and air-delivery provisions.

d. Paragraph 6-41 contains planning data for determining USAF transport aircraft requirements for movement of units of a type of field army.

e. Table 6-38 gives the characteristics of USAF transport aircraft.

Section VI. MISCELLANEOUS TRANSPORT

6-46. General

Other means of transportation are relatively less important than water, rail, motor transport, and air in the overall picture of transportation. However, these other means have peculiar characteristics that are adaptable to special situations (para 6-47, 6-48, and 6-49). Therefore, planners should not underestimate their value.

6-47. Pack Animals

a. Employment. Pack mules may be employed to transport light cargo over terrain that is impassable for motor transport.

b. Characteristics and Capabilities. Characteristics and capabilities of pack animals are as follows:

Table 6-38. USAF Transport Aircraft Characteristics

1	2	3	4	5	6	7	8	9
	C-5A [a] (Galaxy)	C-7A (Caribou)	C-123 (Provider)	C-124C (Globemaster)	C-130E (Hercules)	C-133B (Cargomaster)	C-135 (Stratolifter)	C-141 (Starlifter)
2 Emergency max cargo payload [b]	265,000	7,500	12,000	59,000	49,000	106,000	77,500	64,405
3 Normal max cargo payload [b]	230,000	7,500	12,000	55,000	35,000	100,000	77,500	64,405
4 Emergency max troop capacity	345	32	61	200	92	[c] 120	126	154
5 Normal max troop capacity (over water/over land).	345	32	61	200	92	120	75/126	154
6 Litter capacity (no attendants)	----------	20	50	127	74	[c] 55	44	80
7 Paratroops	----------	26	----------	112	64	----------	----------	123
8 Average cruise speed (knots)	440	150	138	200	275	270	467	440
9 Max range (nautical miles)	5,500	975	1,200	3,620	3,540	3,565	6,640	4,800
Cargo doors:								
10 Dimensions (width/height (in)) and location.	228.0×162.0 fwd [d] 228.0×114.0 rear	73.5×74.0 rear	110.0×98.0 rear	136.0×139.0 fwd 93.0×159.0 elevator well	123.0×108.0 rear	132.5×159.0 rear 106.0×100.0 fwd left	117.0×78.0 fwd left 117.0×136.0 rear	123.0×108.0 rear
Cargo compartments:								
11 Floor level to ground (in)	73.0	45.6	33.5	105.0	40.0	50.0	121.0	50.0
12 Length usable (in)	1,454.0	345	420.0	884.0	[e] 492.0	[c] 982.0	860.0	840.0
13 Width floor (in)	228.0	81	110.0	133.0	123.0	142.0	117.0	123.0
14 Height clear (in)	162.0	75	98.0	139.5	109.0	143.0	85.0	109.0
15 Cubic space (cu ft)	34,734	1,213	2,420	3,876	2,818	11,482	4,950	5,400
A type of logistic mission:								
16 Payload/nautical miles	220,000/3,050 112,600/5,500	7,000/400	12,000/990	42,000/1,500	37,000/2,900	62,400/2,500	61,120/2,300	57,462/4,000

[a] Detailed characteristics are taken from current manufacturers' specifications. Data are subject to change, resulting from developmental testing.

[b] Maximum ACL (lb) will vary with operating weight of aircraft (para 6-41). Aircraft gross takeoff weight, which includes fuel, oil, water, flight personnel, and the logistic range mission, determines the maximum ACL for either normal or emergency operations.

[c] Emergency only.

[d] With the ramp lowered to the ground, rear cargo opening will accommodate vehicles or other loads up to 150 in (12.5 ft) in height.

[e] Excludes ramp.

(1) Height—59 to 62 inches.

(2) Weight—1,000 to 1,200 pounds.

(3) Rate of march—2.5 kilometers per hour (average).

(4) Cargo load—200 to 250 pounds.

(5) Movement of casualties—one litter or two sitting casualties.

(6) Forage—10 pounds of oats and 14 pounds of hay per day. (May be reduced for short periods up to 10 days without impairing capability.)

(7) Water—10 gallons per day.

(8) Average daily distance.

(*a*) Mountainous terrain—19 kilometers.

(*b*) Rolling or flat terrain—35 kilometers.

(9) Gradability.

(*a*) Rate of ascent—500 vertical meters per hour.

(*b*) Rate of descent—300 vertical meters per hour.

(10) Noneffective rate—32 per 1,000 mules.

c. Transportability. Table 6–39 provides transportability data for pack animals.

d. Horse-Drawn Carts. Horse-drawn carts can travel 32 kilometers in the day and can sustain a payload of 1,000 pounds.

6–48. Sled Trains

a. General. A sled train furnishes oversnow and overice movement of supplies, equipment, and personnel. Sled trains are employed when more efficient means of transportation are not feasible.

Table 6–39. Transportability of Pack Animals

	1	2
1	Vehicle	Capacity (horses or mules)
2	Truck, 1½-ton, cargo	2
3	Truck, 2½-ton, cargo, 6x6	4
4	Semitrailer, 6-ton, combination animal and cargo.	8
5	Railroad stock car, 40-ft	25 (approx)
6	Railroad stock car, 36-ft	20 to 22 (approx)
7	Airplane, transport *	4 to 6

*May be transported at altitudes up to 18,000 feet with no ill effects.

b. Planning Factors.

(1) *Capacity of cargo transporters.*

(*a*) Sled, 10-ton (OTACO)—bed dimensions, 8 feet by 20 feet; capacity, 20,000 pounds.

Table 6–40. Capability of Tractor Prime Movers

	1	2	3
1	Class	Net weight (lb)	Load (tons)
2	Tractor, full-tracked, diesel-engine-driven, heavy drawbar pull, low ground pressure (LGP), Caterpillar D8, with D–342 engine.	72,000	40
3	Same as above, but with D-353 engine.	72,000	50

Note. Not used when traveling over unprepared trails or cross country.

(*b*) Sled, 20-ton (OTAGO)—bed dimensions, 12 feet by 24 feet; capacity, 40,000 pounds.

(*c*) Transporter, cargo, large-wheel, off-road (Thompson trailer)—main cargo bed dimensions (with side extensions), 12 feet by 13 feet; rear-axle cargo well, two usable cargo areas, each 4 feet by 4 feet, separated by rear axle; capacity, 20,000 pounds.

(2) *Capability of tractor prime movers.* Recommended loads for a heavy crawler tractor are listed in table 6–40. Experience shows that loads heavier than these result in greatly increased equipment failure and frequent inability of the tractor to move the load under soft snow conditions.

(3) *Payload capacity.* Assuming that marked trails will be used, weather delays will be encountered, and malfunctioning equipment will be dropped for later recovery, the payload capacity of five tractor sled trains (D8 LGP with D–342 engine as prime mover), consisting of one command train (one tractor pulling four wanigans) and four cargo trains (four tractors, each pulling four loaded 10-ton sleds or 10-ton trailers or two loaded 20-ton sleds), on 161- and 322-kilometer destination trips is as determined in table 6–41.

(4) *Rates of speed.* Performance figures in table 6–42 pertain to the D8 (Caterpillar) LGP tractors used in Greenland by the US Army Polar Research and Development Center and in Antarctica by the US Navy Antarctic Support Force. The tractors are equipped with either the D–342 or the D–353 turbocharged engine.

6–49. Human Bearers

a. General. Human bearers consist of indigenous or other personnel used for the transportation of personnel and supplies or both. Their use generally is limited to those situations where other means are impracticable or not available.

Table 6-41. Payload Capacity of Tractor Sled Trains

1	1 Factors	2 322-km round trip	3 644-km round trip
2	Fuel per tractor—2.22 gallons per km × km (round trip)	715 gal	1,430 gal
3	Gal per tractor × 5 tractors	3,575 gal	7,150 gal
4	Plus 15-percent safety margin	536 gal	1,072 gal
5	Total gal	4,111 gal	8,222 gal
6	Total gal × 7.75 lb per gal (bulk diesel at 10° F.)	31,860 lb	63,720 lb
7	Lubricants, alcohol, and antifreeze—30 lb per tractor per 161 km	300 lb	600 lb
8	Travel time at 80.5 km per day	4 days	8 days
9	Fuel for snow melters, heaters, and electric generators in command train—180 gal per day × 7.75 lb per gal	5,580 lb	11,160 lb
10	Total domestic load (line 6 + line 7 + line 9)	37,740 lb, or 18.87 STON	75,480 lb, or 37.74 STON
11	Gross capacity—4 cargo trains × 40 STON per train	160 STON	160 STON
12	Payload capacity (line 11—line 10)	141.13 STON	122.26 STON

Note. Rations, tools, repair parts, and survival equipment are carried in or on the wanigans of the command train. This permits the sleds or trailers of the cargo trains to be used fully as cargo carriers.

b. Planning Data. For planning, the following factors may be assumed:

(1) Cargo loads.

(*a*) Male bearer—80 pounds' average load.

(*b*) Female bearer—30 to 35 pounds' average load.

(2) Personnel loads—8 to 12 bearers per litter team (for continuous operation).

(3) Rate of march—19 kilometers in the day under average conditions and level terrain.

(4) Overloading and speedup of operations cause desertions and increase the sick rate.

(5) Noneffective rate—30 percent.

(6) Close supervision is required to prevent pilferage.

Table 6-42. Vehicle Speed of Tractors

1	1 Gear	2 D-342 Speed (kmph) Forward	3 D-342 Speed (kmph) Reverse	4 D-353 Speed (kmph) Forward	5 D-353 Speed (kmph) Reverse
2	1st	2.41	3.21	3.25	3.25
3	2d	3.05	4.18	4.61	4.61
4	3d	4.50	6.11	5.63	11.97
5	4th	6.11	------	8.65	------
6	5th	8.36	------	11.97	------

CHAPTER 7

COMBAT SERVICE SUPPORT—MAINTENANCE, CONSTRUCTION, AND OTHER

Section I. MAINTENANCE

7–1. Maintenance Service in the Theater of Operations

Maintenance of ammunition is covered in paragraphs 5–8 through 5–18.

a. General. Maintenance support is predicated on the concept of service to the user to assist him in keeping his equipment in serviceable condition and to repair and return unserviceable equipment to the user as soon as practicable. This is accomplished, at the direct support level, by providing supported units with technical assistance and contact team support, by repairing equipment for prompt return to supported units, and by using direct exchange and operational readiness float precedures. At the direct support maintenance level, repair of end items is expedited by concentrating on the replacement of defective components; the end items so repaired are returned to the supported units. Normally, table of organization and equipment (TOE) and table of distribution (TD) general support maintenance organizations will repair and overhaul materiel in support of the Army area supply system.

b. Procedures. All direct support and general support maintenance units initiate requests for repair parts directly to the support brigade stock control center. The supporting repair parts supply company, general support, supplies repair parts directly to the supported direct support or general support unit. Each maintenance unit of the maintenance direct support battalion, except the transportation aircraft direct support company, maintains an operational readiness float of combat critical end items of equipment. End items beyond the repair capabilities at the direct support level, for any reason, are turned in to the direct support maintenance unit by the using unit, and a replacement is requisitioned through the using unit supply channels. Equipment beyond the repair capability or repair time limits of the light maintenance companies, direct support, is evacuated to the direct support battalion's maintenance company, rear. Equipment beyond the repair capability of the maintenance company, rear, is reported to the maintenance management center, support brigade, and evacuated to designated general support units, as directed.

c. Direct Support.

(1) Direct support elements of headquarters and headquarters detachment (HHD), maintenance direct support battalion (TOE 29–136), serve as sources of supply for repair parts. The maintenance direct support battalion, or elements thereof, may be used to replace the type of elements within a divisional maintenance battalion.

(2) The maintenance company, rear, direct support (TOE 29–208), provides direct support backup maintenance to the light maintenance companies of the battalion and direct support to users of heavy equipment. The light maintenance company, direct support (TOE 29–207), provides direct support maintenance, limited evacuation, and maintenance supply support for nondivisional units in the field army area. This mission does not include support for medical, cryptographic, air-delivery, and ammunition equipment.

(3) The transportation aircraft direct support company (TOE 55–457) provides direct support maintenance, maintenance supply support, and field army recovery service for aircraft, avionics, and aerial weapons organic to nondivisional units of the field army.

d. General Support.

(1) The HHD, maintenance general support battalion (TOE 29–136), and its general support elements provide general support maintenance service and backup maintenance support to combat divisions and nondivisional direct support units.

(2) The light equipment general support maintenance company (TOE 29–134) provides general support maintenance for light equipment end items and components thereof, to include

chemical, engineer, quartermaster, and signal equipment.

(3) The heavy equipment general support maintenance company (TOE 29–137) provides general support maintenance for components of wheeled and tracked vehicles, artillery, heavy construction equipment, and vehicular-mounted chemical equipment and end items in these categories, when required. Additionally, this unit provides general support maintenance for small arms, instruments, and fire control equipment. It also performs general support maintenance on reserve stocks of end items supported.

(4) The transportation aircraft maintenance general support company (TOE 55–458) provides general support maintenance for aircraft armament and avionic backup direct support maintenance for aircraft and aircraft armament for divisional and nondivisional aircraft direct support maintenance companies in the field army. This company can provide approximately 33,000 man-hours per month of general support and backup direct support maintenance.

(5) The collection and classification company (TOE 29–139) establishes and operates a collection and classification point for the receipt, inspection, segregation, disassembly, preservation, and disposition of serviceable and unserviceable class II, IV, VII, and IX materiel. Materiel to be scrapped is turned over to the supply and service battalion for disposition as scrap or for sale, donation, or destruction. The company does not handle items of cryptographic material, missile systems, and medical materiel.

e. Field Army. Divisional and nondivisional units providing maintenance and repair parts support for Army materiel in the field army area are shown in table 7–1. Each unit is identified whether its mission is direct support or general support (colm 3). End items of equipment are indicated across the top of the table, beginning with column 4. Abbreviations used in columns 3 through 19 of table 7–1*a* and columns 3 through 24 of table 7–1*b* are as follows:

DS—direct support mission.
DX—direct exchange.
GS—general support mission.
MR—complete support, including inspection, repair, and repair parts support.
PO—repair parts only. No repair.
RO—repair only. No parts issued.

f. Flow Charts. Figure 7–1 shows equipment evacuation channels for unserviceable class VII and IX items of equipment. Figure 7–2 shows evacuation channels for Army aircraft. Figure 7–3 shows the repair parts flow (direct support) (less aircraft, aircraft components, medical, missile, and cryptographic items).

7–2. Maintenance Control

a. General. This paragraph outlines a workload control system designed to determine whether an item can be repaired at the direct support maintenance level or whether it must be evacuated. The system sets forth the means of computing and controlling the maintenance backlog and general policies applicable thereto. The workload control system is a managerial tool used to balance actual workload against the workload that a maintenance facility can assume. This system is intended as a guide only and is flexible in application. The system is based on the fact that a maintenance facility has a certain number of man-hours to expend on accomplishment of its mission during a given period of time, and the workload generally should be limited to this capacity. This permits the programing of work to allow maximum concentration on a large number of small jobs, if required; a smaller number of large jobs, if desired; or any combination of both.

b. Objectives. The objectives of the workload control system are—

(1) To establish a criterion or factor, in terms of man-hours, that can be used in determining whether an item can be repaired at the direct support maintenance level or whether it must be evacuated.

(2) To establish, in terms of man-hours, the unit production potential.

c. Value. The fundamental principle of direct support maintenance is to repair and return items of materiel to service as rapidly as possible. The capability of a unit to perform in this manner is limited by the type and quantity of tools, quality of personnel, and available production time. The value of the system is in its ability to relate these factors and determine the unit capacity.

d. Factors. The workload control system uses the following computations, which make up the basic factors on which the system is based:

(1) *Man-hours.* The man-hour computation is made by deriving the total number of man-hours actually available from the total number of man-hours theoretically available. For example, a repair section has 11 productive item repair personnel assigned. Since it normally works 12 hours per day, there are theoretically 132 item repair man-

Table 7–1. Maintenance and Repair Parts Support Capability

a. Mobility Equipment and Supply and Service Items

1	Unit	TOE	Support role	Automotive items and related components (less tires)	Tires and tubes	Aircraft and related components	Air delivery equipment	Construction equipment	Reproduction and survey equipment	Lighting and power-generating equipment	Refrigeration and air-conditioning equipment	Materials-handling equipment	Clothing and light textiles	Laundry, bath, and baking equipment	Food service equipment	Fuel-dispensing and POL equipment	Burners, fire units, and heaters	Office machines	Sewing machines
	Nondivisional																		
2	Tire rep co	9–117G	GS		RO														
3	QM airdrop sup co	10–407G	DS				DX												
4	Fld svc co, GS, fwd	29–114G	GS										DX RO						
5	Rep parts sup co, GS, corps	29–119G	GS	PO	PO [a]	PO		PO	PO	PO	PO	PO		PO	PO	PO	PO	PO	PO
6	Rep parts sup co, GS, army	29–119G	GS	PO	PO [a]			PO	PO	PO	PO	PO		PO	PO	PO	PO	PO	PO
7	Fld svc co, GS, army	29–124G	GS										RO						
8	LE GS maint co	29–134G	GS						RO	RO	RO				RO		RO	RO	RO
9	Hv equip GS maint co	29–137G	GS	RO				RO				RO		RO		RO			
10	Maint co, rr, DS	29–208G	DS	MR	PO [a]			MR	MR	MR	MR	MR		MR	MR	MR	MR	MR	MR
11	Lt maint co, DS	29–207G	DS	MR	PO [a]			MR	MR	MR	MR	MR		MR	MR	MR	MR	MR	MR
12	S&S co, S&S bn, DS	29–217G	DS										DX						
13	Trans acft DS co	55–457G	DS			MR													
14	Trans acft maint GS co	55–458G	GS			RO													
	Divisional																		
15	S&S co, S&T bn	10–7H	DS										DX						
16	HQ & lt maint co, maint bn, inf div	29–16H	DS	MR	PO [a]			MR		MR	MR	MR		MR	MR	MR	MR	MR	MR
17	Fwd spt co, maint bn, inf div	29–17H	DS	MR	PO [a]			MR		MR	MR	(b)		(b)	(b)	(b)	(b)	(b)	(b)
18	Trans acft maint co, maint bn, inf div	55–89H	DS			MR													

[a] Replacement tires and tubes provided as repair parts.

[b] Maintains repair parts stockage as necessary for such items, if supported. Can perform limited maintenance of a mechanical nature. Most DS maintenance provided by maintenance company, rear, DS.

Table 7-1. Maintenance and Repair Parts Support Capability—Continued

b. Weapons and Chemical and Communications-Electronics Items

1	1	2	3	4	5	6	7	8	9	10	11	12	13	14	15	16	17	18	19	20	21	22	23	24
	Unit	TOE	Support role	Artillery weapons (conventional and fire control systems)	Small arms	Nonintegrated fire control instruments	Conventional ammunition	Nuclear weapons and associated test equipment	Large missile systems	Small missile system, class II and VII components	Avionics	Aircraft armament	Communication equipment	Cryptographic equipment	Photographic and projection equipment	Electrical/electronic devices and equipment	Radiac equipment	Automatic data processing equipment	Electronic accounting machine equipment	Infrared devices	Smoke generators	Protective masks	Flamethrowers	Decontamination and protective equipment
	Nondivisional																							
2	Ord ammo DS/GS co	9-17G	DS/GS				MR																	
3	Ord sp ammo DS co	9-47G	DS					PO																
4	Ord sp ammo co, GS/DS	9-48G	GS					MR																
5	Ord GM GS co	9-227E	GS						MR															
6	HHC, spt gp	29-102G	DS/GS											MR										
7	Rep parts sup co, GS, corps	29-119G	GS	PO	PO	PO				PO	PO	PO	PO		PO	PO	PO	PO	PO	PO	PO	PO	PO	PO
8	Rep parts sup co, GS, army	29-119G	GS	PO	PO	PO				PO	PO		PO		PO	PO	PO	PO	PO	PO	PO	PO	PO	PO
9	LE GS maint co	29-134G	GS								RO		RO		RO	RO	RO	RO	RO	RO	RO[a]	RO	RO[a]	RO[a]
10	Hv equip GS maint co	29-137G	GS	RO	RO	RO				RO			RO[b]								RO[b]		RO[b]	RO[b]
11	Maint co, rr, DS	29-208G	DS	MR	MR	MR							MR		MR	MR	MR			MR	MR	MR	MR	MR
12	Lt maint co, DS	29-207G	DS	MR	MR	MR							MR		MR	MR	MR			MR	MR	MR	MR	MR
13	Trans acft DS co	55-457G	DS								MR	MR												
14	Trans acft maint GS co	55-458G	GS								RO[b]	RO												
	Divisional																							
15	Sig bn (armd div, inf div, inf div (mech))	11-35H	DS											MR										
16	HQ & lt maint co, maint bn, inf div	29-16H	DS	MR	MR	MR				MR			MR		MR	MR	MR			MR	MR	MR	MR	MR
17	Fwd spt co, maint bn, inf div	29-17H	DS	MR	DX	MR				MR			MR		[c]	MR	MR			MR	[c]	[c]	[c]	[c]
18	Trans acft maint co, maint bn, inf div	55-89H	DS								MR	MR												

[a] Except vehicular-mounted equipment.

[b] Limited repair to vehicular-mounted items only.

[c] Maintains repair parts stockage as necessary for such items, if supported. Can perform limited maintenance of a mechanical nature. Most DS maintenance provided by maintenance company, rear, DS.

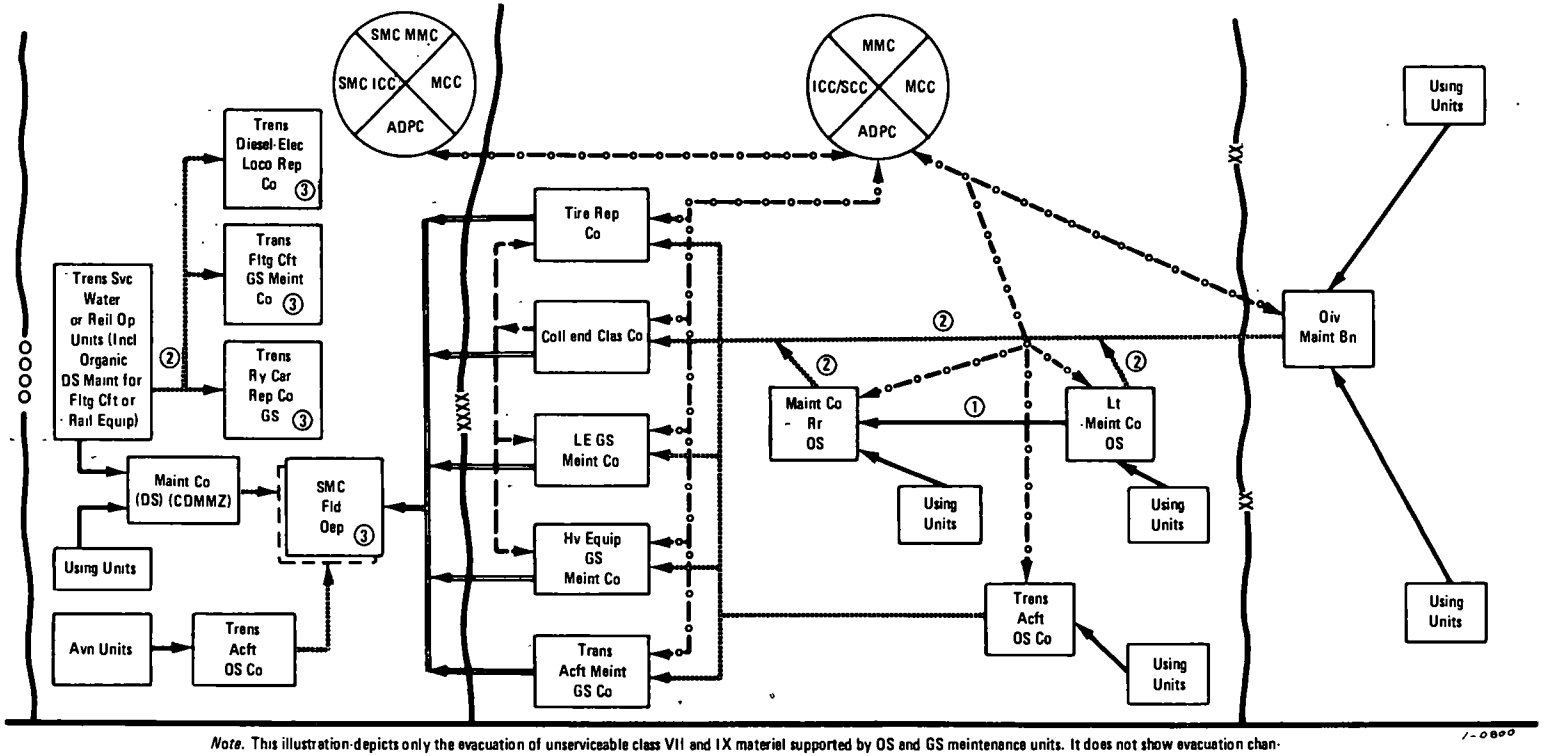

Note. This illustration depicts only the evacuation of unserviceable class VII and IX materiel supported by OS and GS maintenance units. It does not show evacuation channels of scrap and other salvage items; ammunition and missile-system items; medical, cryptographic, or foreign materiel, which are evacuated as directed, after coordination with technical intelligence agencies.

LEGEND

Evacuation from using units to OS maintenance units and from OS maintenance units to OS backup.

Evacuation of items beyond repair capability or capacity of OS maintenance units to GS maintenance or collection facilities. Evacuation destinations are provided by the control centers, based on types of items being evacuated and workloads of GS maintenance units

Flow of information and instructions relative to types of items requiring evacuation to a higher support category, condition of materiel, and disposition instructions.

Overflow GS and items requiring depot maintenance.

Flow of repairable materiel from the collection and classification company to maintenance units.

AOPC—Automatic data processing center.
ICC—Inventory control center.
MCC—Movement control center.
MMC—Maintenance management center.
SCC—Stock control center.
SMC—Supply and maintenance command.

① Evacuation for backup OS maintenance.

② In general, items directed to the collection and classification company consist of economically reparable end items (except aircraft, small arms, and instruments) requiring general or depot support maintenance, and those economically reparable end items containing serviceable or reparable components/parts that are to be reclaimed. The bulk of the items evacuated by DS maintenance units consists of unserviceable components that normally will be repaired at the appropriate GS maintenance unit. Small arms, instruments, aircraft, items requiring GS-level MWO application, and end items accepted by the GS levels for repair and return to user usually are evacuated directly to the appropriate GS maintenance unit.

③ Within the COMMZ portion of above diagram, the box titled "SMC Fld Dep" represents all the various types of individual GS maintenance units normally found as part of a COMMZ (SMC) field depot complex or under control of a field depot, plus various supply- and service-oriented units and other related organizations. Included among the maintenance-oriented units may be cellular maintenance teams or detachments to perform specialized support functions or to augment the support capability of company-size maintenance units. Rail and marine GS maintenance units, while usually under control of an SMC field depot, are shown separately inasmuch as they are frequently found located at or near the rail or port facility of the transportation service unit they support.

Figure 7–1. Evacuation flow of unserviceable class VII and IX items supported by direct support or general support maintenance battalions.

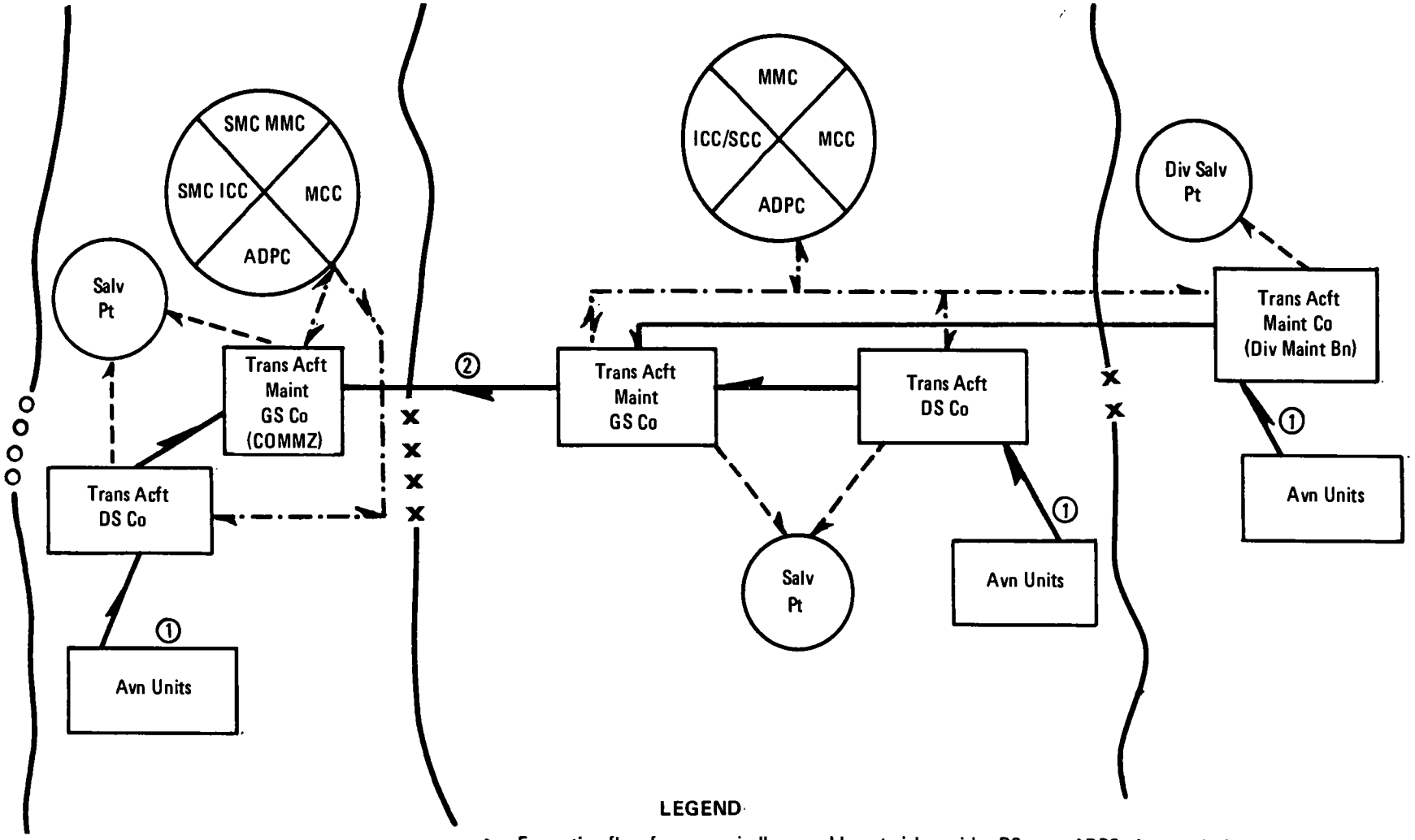

Figure 7-2. Army aircraft evacuation channels in the theater of operations.

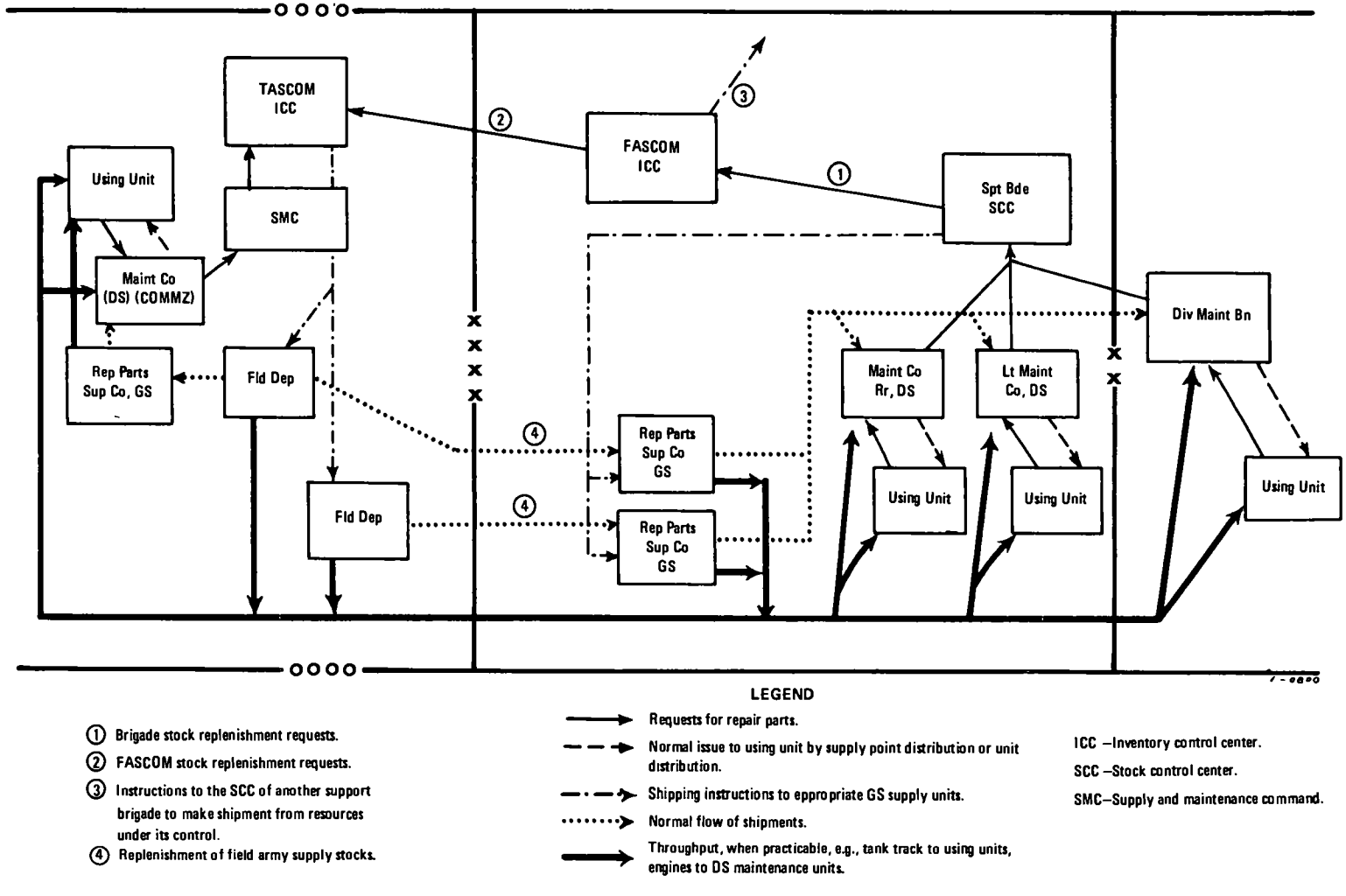

Figure 7–3. Repair parts flow (direct support) (less aircraft, aircraft components, medical, missile, and cryptographic items).

hours available (12 × 1). Department of the Army (DA) policy and local conditions determine percentages that must be deducted from this total to arrive at the number of man-hours actually available. These percentages cover such nonproductive operations as movement time, administrative activities, maintenance of operating equipment, or other contingencies and will vary, depending on the function or work activity involved. As a hypothetical example, an item repair section actually might have available 76.6 man-hours per day for the function of repair.

(2) *Workload.* Higher headquarters normally prescribes the workload, expressed in days, authorized to be on hand in the company (or section) at any given time. This usually represents the maximum number of days in which the company should complete the items scheduled for repair. When the number of days is multiplied by the actual number of man-hours available each day, the result is the total number of actual man-hours available to the company (or section) for a given period of time. For example, if the prescribed workload is 3 days, the total number of actual item repair man-hours available to the section is 229.8 (3 × 76.6).

e. Utilization. Utilization of the workload control system in a repair section of a direct support maintenance company is described below. The first example illustrates application when a standard repair time factor is available. The second illustrates application when the repair time factor has not been established.

(1) *Example 1.* The standard repair time factor for the repair of a small item is 0.5 man-hour. The prescribed maximum workload for the section is 3 days (229.8 man-hours). Based on the standard repair time factor, the section can repair 459.6 items in the 3-day period. The section has on hand maintenance requests covering a total of 314 items. A new maintenance request (number 5) is received covering 50 items, or requiring 25 man-hours to complete the job.

(*a*) The workload control system is applied by subtracting the total number of items on hand from the total number that can be repaired in the prescribed 3-day limit (459.6—314). The resulting figure of 145.6 items indicates that maintenance request number 5 can be completed in the 3-day limit.

(*b*) If the calculation had indicated that maintenance request number 5 could not be completed in the 3-day limit, the company either may have evacuated the job to the next higher maintenance unit or assigned the job to the section, with the understanding that additional jobs would have to be evacuated until the number of items on hand has been reduced.

(2) *Example 2.* A standard repair time factor has not been developed for the repair of a certain item. The prescribed maximum workload is 3 days (229.8 man-hours). The section has on hand 12 maintenance requests for the repair of items requiring an estimated 210 man-hours to complete. A new maintenance request (number 13) requiring an estimated 25 man-hours to complete is received.

(*a*) The workload control system is applied, in this instance, by subtracting the total number of man-hours required to complete the jobs on hand from the total number of man-hours actually available (229.8—210). The resulting figure of 19.8 man-hours indicates that maintenance request number 13 cannot be completed in the 3-day limit.

(*b*) The company may, therefore, evacuate the job to the next higher maintenance unit or assign the job to the section, with the understanding that no additional jobs can be accepted until the total number of man-hours of work has been reduced.

7–3. Operational Readiness Float and Direct Exchange Criteria

a. Operational Readiness Float.

(1) The operational readiness float comprises those end items or major components of mission-essential, maintenance-significant equipment authorized for stockage, normally by direct support and general support maintenance units or activities, to replace unserviceable equipment or to meet operational requirements. Float items normally will be positioned at the supporting direct support and general support maintenance units or activities. An operational readiness float will be provided for issue as replacement for unserviceable, economically reparable equipment to meet operational commitments, provided the equipment cannot be repaired in time to meet operational requirements. It will be provided also to oversea organization commanders and continental United States (CONUS) strategic and air defense organization commanders on a loan basis for items lost, destroyed, or determined uneconomically reparable (AR 750–1). However, this procedure applies only when the supply delivery date is determined to be after the operational need date. When a float

item is loaned under these conditions, the user is responsible for requisitioning a replacement item and returning the float item to the supporting unit. An operational readiness float will be provided in support of priority units before equipment is issued to lower priority units. Direct support and general support maintenance units or activities will be authorized sufficient mechanics and transportation in their TOE's or tables of distribution and allowances (TDA) to maintain and transport the operational readiness float in accordance with mission-prescribed mobility. Guidance for establishing operational readiness floats is contained in appropriate DA supply bulletins.

(2) Table 7-2 gives the operational readiness float authorizations recommended for selected types of equipment in direct support maintenance units and activities. The factors are percentages of the total equipment supported by the maintenance activity and are subject to modification by the command concerned, depending on location, activity, and the supply station.

(3) Criteria for direct exchange replacement are expressed in the number of days an unservice-

Table 7-2. Operational Readiness Float Authorizations

1	1	2	3
1	LIN	Item or type of equipment	Operational readiness float (percentage)
2	B83582	Bt, brg-erection, inboard-eng, aluminum, 27-ft, gas-driven	10
3	F43414	Crane-shovel, trk-mtd, 20-ton	10
4	J36109	Genr set, diesel-driven, 30-kw	10
5	J38301	Genr set, diesel-driven, 60-kw	5
6	J50220	Genr set, ptbl, gs-driven, 10-kw	5
7	J74852	Grader, road, mtz, diesel-driven	10
8	L76488	Loader, scoop-type, diesel-driven, 4-wheel, 2-1/2-yd	5
9	N34334	Outboard mtr, 25-BHP	5
10	S35741	Saw, chain, gas-driven, 18-in	10
11	W77090	Trac, full-tracked, diesel-driven, hv-DBP	15
12	W80515	Trac, full tracked, diesel-driven, lt-DBP	5
13	W80926	Trac, full-tracked, diesel-driven, mdm-DBP	15
14	W95400	Tlr, cgo, 1/4-ton	3
15	X40009	Trk, cgo, 2-1/2-ton	10
16	X62340	Trk, van, shop, 2-1/2-ton	3
17	D10990	Carr, cgo, amph, tracked	4
18	D12086	Carr, pers, full-tracked, armd	9
19	H55432	Fire con sys, AD	10
20	J96819	Gun, AD, SP, 40-mm	9
21	K56981	How, 8-in., SP	5
22	K57255	How, 105-mm, SP	6
23	K57392	How, lt, towed, 105-mm	3
24	K57666	How, 155-mm, SP	6
25	R50680	Tk recov veh	8
26	V13269	Tk, cbt, 152-mm gun	9
27	W76679	Trac, full-tracked, high-speed	8
28	Y33616	Watch, wrist	20
29	C19503	Breathing appar, compressed-air	10
30	C19640	Breathing appar, oxy-genr	10
31	F82154	Decon appar, power-driven, trk-mtd	10
32	G22109	Disperser, riot con agt, hel- or veh-mtd	15
33	G22246	Disperser, riot con agt, ptbl	15
34	H50418	Filter unit, gas-particulate, hosp, six-man, 12-cfm	5
35	H50829	Filter unit, gas-particulate, tk, three-man, 12-cfm	10
36	H68063	Flamethrower, ptbl	15
37	J30492	Genr, smoke, mech, pulse-jet	36
38	K26849	Heater, water, oil	10
39	M11210	Mask, CBR, dog	10
40	S79045	Svc unit, flamethrower, trk-mtd	30
41	H49733	Filter unit, gas-particulate, elec, motor-driven or gas-driven, 300-cfm, ABC-M6	5

able item may remain in the maintenance facility without being repaired until it is exchanged and replaced by a like item from the operational readiness float stock of the maintenance facility. These criteria are established and modified as necessary by policy of DA and the commands concerned, with recommendations and guidance from the appropriate service activity. For example, the following general policy is used for the establishment, stockage, and operation of direct exchange of repair parts and assemblies for major items of ordnance-type equipment:

(*a*) Items that have a high mortality rate and are reparable by cleaning, adjusting, or using repair kits may be placed on a direct exchange basis with using units.

(*b*) When a new operation is begun, or a new item is added to the direct exchange list, 25 percent of the authorized unit stockage is used. This percentage factor may be increased or decreased as the activity or the demands dictate. At no time should an excess of 75 percent of unit stockage be placed in the direct exchange section.

(*c*) Direct exchange activities must be reviewed each 30 days to adjust the stockage. As demands decrease, the stockage also should decrease. Seasonal fluctuations in the demand for some items will affect direct exchange stockage, i.e., cause the direct exchange section to be overstocked or understocked. The 75- to 25-percent remaining stockage in the technical supply section is a buffer to replace items salvaged by the repair shop and deadlines caused by insufficient serviceable items in the direct exchange section.

(*d*) The data in table 7–3 should be used as a guide in exchanging operational readiness float items of equipment other than guided missiles and heavy rockets.

b. Direct Exchange.

(1) Direct exchange is a supply method of issuing, through a direct exchange activity, serviceable materiel in exchange for unserviceable materiel on an immediate item-for-item basis. This is accomplished with minimum paperwork. The normal processing of property accountability documents between the direct exchange activity and the supported unit is not required.

Table 7–3. Equipment Downtime (Days)

	1	2
1	Type of equipment	Downtime (days)
2	Combat vehicles	14
3	Transport vehicles	5
4	Fire control materiel	3
5	Automatic weapons, air defense and towed artillery.	3
6	Small arms	(Immediate exchange on all items)

(2) Items selected for direct exchange are determined by the joint and coordinated effort of maintenance and supply personnel. Placement in the direct exchange is not mandatory. Items selected for addition to, or retention in, direct exchange activities, however, must be—

(*a*) Items that are reparable by the maintenance shop or local contractor supporting the direct exchange activity.

(*b*) Items that require repair, or anticipated repair, at least 12 times per year for addition and six times per year for retention.

(*c*) Mission-essential support items carried on the authorized stockage list, provided the quantities stocked in the direct exchange activity, plus the quantities on hand in the direct support unit/installation property account, do not exceed the total requisitioning objective for such items.

(3) Unserviceable items received by the direct exchange activity will be turned over to the maintenance shop for repair. Items that a maintenance facility finds nonreparable are returned to the supporting supply activity or property disposal officer by the direct exchange activity.

(4) Items to be handled on a direct exchange basis are issued to the direct exchange activity and dropped from the accountable records of the property account.

(5) Records to maintain balance on hand and to accumulate repair rate, resupply rate, and repair-cycle time information must be maintained by the direct exchange activity.

(6) The stockage level of an item authorized for direct exchange is the sum of the repair-cycle requirement and the resupply level. The total level is determined as follows:

(*a*) *Step 1.* Determine the average monthly repair rate during the latest 12-month period by totaling the "number repaired" entries for the previous 12 months and dividing by 12. If 12 months' experience is not available, use the average for the number of months for which the monthly repair rate has been recorded.

(*b*) *Step 2.* Determine the average resupply (washout) rate per month by totaling the "external demand" entries for the previous 12 months and dividing by 12.

(*c*) *Step 3.* Determine the repair-cycle time by comparing dates when the items are submitted with the dates that items are returned from the repair activity. In determining the average repair-cycle time, exclude any extraordinary awaiting-parts delays and any intentional extended transit, storage, or repair process delays.

(*d*) *Example.*

1. Assumption.

(a) *Step 1.* Average monthly demands 120

(b) *Step 2.*

(*1*) Average monthly repair rate 85

(*2*) Average monthly resupply rate 35

2. Computation.

(a) Using the following formula, compute the repair-cycle requirement:

$$\frac{\text{Repair rate (85)} \times \text{repair-cycle time (10 days)}}{\text{number of days in the month (30)}} = \text{repair-cycle requirement}$$

$$\frac{85 \times 10}{30} = \frac{850}{30} = 28 \text{ repair-cycle requirement}$$

Add a 25-percent safety level; thus, 28 divided by a safety-level factor of 4 becomes $28 \div 4 = 7$
Authorized level equals $28 + 7$ for total of 35.

(b) Using the following formula, compute the resupply-level requirement:

Resupply rate (35) ÷ a resupply-level factor of 4 = resupply-level quantity of 8.7 or 9.

(*e*) Based on the above computations, the total quantity authorized to be on hand, on order, and on maintenance request, is 35 (repair-cycle requirement) plus 9 (resupply-level requirement), for a total operating and safety level of 44.

(7) Table 7–4, based on formulas contained in (6) above, has been developed to cover from 1 to 30 days' repair-cycle time, from 1 to 50 average monthly repair rate, and from 1 to 100 resupply rate. Use of this table permits direct exchange personnel to compute stock levels without mathematical computation. The repair-cycle requirement can be obtained from table 7–4*a* by reading across from the number representing the average number of items repaired in a month and reading down from the number of days representing the number of days in the repair cycle. The number where these two lines intersect is the authorized repair-cycle requirement. The resupply-level requirement can be obtained from table 7–4*b* by reading across from the number representing the average monthly resupply rate and selecting the number in the adjacent resupply quantity column. The total authorized stockage level is obtained by totaling the repair-cycle requirement and the resupply-level requirement. When the average monthly repair rate or the average resupply rate exceeds 50, the direct exchange stockage table still can be used. However, two separate actions are required. For example, if the monthly repair rate is 76, using table 7–4*a*, conpute the quantity from line 50 and the quantity from line 26. The sum of the two levels represents the total repair-cycle requirement.

(8) A direct exchange list containing stock number, item description, end item application, and authorized stock level is prepared by the maintenance activity and submitted to the installation or organization commander or his designated staff officer for approval. Lists of approved direct exchange items will be distributed to all units and activities authorized to use these stocks.

7–4. Maintenance Facilities and Utilities Requirements

a. Maintenance shops range in size and scope from small-unit shops with organic maintenance responsibilities to large installations capable of complete overhaul and rebuild of equipment. The size of the shop and the number of shop sections required are governed by the scope of maintenance activities and responsibilities, shop equipment authorized, and workload.

b. Most maintenance units are authorized sufficient equipment for their own utilities requirements. In areas where organic power equipment may be supplemented or replaced by local sources of power, planning for adequate power and lighting becomes necessary. For example, it is estimated that 1 watt per square foot of shop floor area is required for adequate overhead illumination of shop areas. Additional power must be provided for operation of shop machines and equipment, heating, and other uses.

c. Covered shop space requirements for maintenance units are given in table 7–5.

Table 7–4. Direct Exchange Stockage Table

a. Repair-Cycle Requirement

Average Monthly Repair Rate	Repair cycle time (days) 1	2	3	4	5	6	7	8	9	10	11	12	13	14	15	16	17	18	19	20	21	22	23	24	25	26	27	28	29	30
1	1	1	1	1	1	1	1	1	1	1	1	1	1	1	1	1	1	1	1	1	1	1	2	2	2	2	2	2	2	2
2	1	1	1	1	1	1	1	1	1	1	1	2	2	2	2	2	2	2	2	2	2	2	3	3	3	3	3	3	3	3
3	1	1	1	1	1	1	1	2	2	2	2	2	2	2	2	3	3	3	3	3	3	3	3	3	3	4	4	4	4	4
4	1	1	1	1	1	2	2	2	2	2	2	3	3	3	3	3	3	3	4	4	4	4	4	4	4	4	4	5	5	
5	1	1	1	1	2	2	2	2	2	3	3	3	3	3	3	4	4	4	4	4	4	4	5	5	5	5	6	6	6	6
6	1	1	1	2	2	2	2	3	3	3	3	3	4	4	4	4	4	4	5	5	5	5	6	6	6	7	7	7	7	
7	1	1	1	2	2	2	3	3	3	3	4	4	4	4	4	5	5	5	5	6	6	6	6	7	7	7	7	8	8	9
8	1	1	2	2	2	3	3	3	3	4	4	4	4	5	5	5	6	6	6	6	7	7	7	7	8	8	8	8	9	10
9	1	1	2	2	3	3	3	3	4	4	4	4	5	6	6	6	6	7	7	7	8	8	8	8	9	9	10	11	12	12
10	1	1	2	2	3	3	3	4	4	4	4	5	5	6	6	6	7	7	7	8	8	8	9	9	10	10	11	12	13	13
11	1	1	2	2	3	3	4	4	4	4	5	5	6	6	6	7	7	8	9	9	10	10	10	11	11	11	12	13	14	14
12	1	2	2	3	3	3	4	4	4	5	6	6	6	7	7	7	8	9	9	10	10	11	11	11	12	13	14	14	15	15
13	1	2	2	3	3	4	4	4	5	5	6	6	7	7	7	8	9	10	10	11	11	11	12	12	13	14	15	16	16	17
14	1	2	2	3	3	4	4	5	5	6	6	7	7	8	9	10	10	10	11	11	12	12	13	14	15	16	16	17	17	18
15	1	2	3	3	4	4	4	5	5	6	7	7	8	9	9	10	11	11	12	12	13	14	14	15	16	17	17	18	18	19
16	1	2	3	3	4	4	4	5	6	6	7	7	9	9	10	11	11	12	12	13	14	15	15	16	17	18	18	19	19	20
17	1	2	3	3	4	4	5	5	6	7	7	9	9	10	11	11	12	12	13	14	15	15	16	17	18	19	19	20	20	21
18	1	2	3	3	4	4	5	6	6	8	9	9	10	10	11	12	12	13	14	15	16	16	17	18	19	20	20	21	22	23
19	1	2	3	4	4	5	5	6	7	7	8	9	10	11	12	12	13	14	15	16	16	17	18	19	20	21	21	22	23	24
20	1	2	3	4	4	5	6	6	7	8	8	10	11	12	12	14	14	15	16	16	17	19	19	20	21	21	22	23	24	25
21	1	2	3	4	4	5	6	7	7	9	10	10	11	12	13	14	15	15	16	18	19	19	20	21	23	23	24	25	25	26
22	1	2	3	4	5	5	6	7	8	9	10	11	11	12	14	15	15	16	17	19	19	20	21	22	23	24	25	26	26	27
23	2	3	3	4	5	6	6	7	9	10	10	11	12	14	14	15	16	17	18	19	20	21	22	23	24	25	26	27	28	29
24	2	3	4	4	5	6	7	9	10	11	11	12	14	15	16	17	18	19	20	21	21	22	24	25	26	26	27	28	29	30
25	2	3	4	4	5	6	7	9	10	11	11	12	14	15	16	17	17	19	20	21	21	22	24	25	26	27	28	29	30	31
26	2	3	4	4	5	6	7	9	10	11	12	13	14	15	16	17	19	20	20	21	22	24	25	26	27	28	29	30	32	33
27	2	3	4	5	6	6	7	9	10	11	12	14	15	16	17	18	19	20	21	22	24	25	26	27	28	29	30	31	33	34
28	2	3	4	5	6	7	8	9	10	11	12	14	15	16	17	19	20	21	22	24	25	25	26	28	29	30	31	32	34	35
29	2	3	4	5	6	7	9	10	11	12	13	14	15	16	17	19	20	21	22	24	25	26	27	29	30	31	32	33	35	36
30	2	3	4	5	6	7	9	10	11	12	13	15	16	17	19	20	21	22	24	25	26	27	29	30	31	32	33	34	36	38
31	2	3	4	5	6	7	9	10	11	12	14	15	16	17	19	20	21	22	24	25	26	28	30	31	32	34	36	37	38	39
32	2	3	4	5	6	8	9	10	11	13	15	16	18	19	20	21	22	24	25	26	27	29	30	32	33	35	37	38	39	40
33	2	3	4	5	6	8	10	11	12	14	15	16	18	19	20	21	22	24	26	27	29	30	31	33	34	36	38	39	40	41
34	2	3	4	6	7	9	10	11	12	14	15	16	19	20	22	23	24	25	26	27	29	31	32	34	36	38	39	40	41	42
35	2	3	4	6	7	9	10	11	12	14	16	17	19	20	22	23	25	26	27	29	30	32	34	35	37	39	40	42	43	44
36	2	3	4	6	7	8	10	12	14	15	16	17	19	21	22	24	25	26	28	30	31	32	34	35	38	40	41	42	44	45
37	2	3	4	6	7	9	10	12	14	15	16	18	20	21	22	24	26	27	29	31	32	33	35	36	38	41	42	44	45	46
38	2	3	5	6	7	9	10	12	14	16	17	19	20	22	23	25	26	28	30	31	32	34	36	38	40	42	43	45	47	48
39	2	3	5	6	7	9	11	12	14	15	17	19	21	22	23	26	27	29	31	32	33	35	37	39	41	43	44	46	48	49
40	2	4	5	6	9	10	11	13	15	16	18	20	21	23	25	26	28	29	31	33	35	36	38	40	42	44	45	47	49	50
41	2	4	5	6	9	10	11	14	15	16	19	20	22	23	25	27	29	30	32	34	35	37	40	42	43	45	46	48	50	51
42	2	4	5	6	9	10	12	14	15	17	19	21	22	24	26	27	29	31	32	35	36	38	39	41	44	46	47	49	51	52
43	2	4	5	7	9	11	13	14	16	18	20	21	22	25	26	29	30	31	32	36	37	39	40	42	45	47	48	50	52	54
44	2	4	5	7	9	11	13	15	16	19	20	22	24	25	27	29	31	33	35	37	38	40	41	43	46	48	49	51	53	55
45	3	4	5	8	10	11	13	15	16	19	20	23	24	26	28	30	31	33	35	38	39	41	42	44	47	49	50	52	54	56
46	3	4	6	8	10	11	13	15	17	19	20	23	24	26	29	31	33	35	36	37	40	42	43	46	49	50	52	55	56	58
47	3	4	6	8	10	11	13	15	17	20	21	24	25	27	30	33	34	35	37	39	41	43	45	47	50	51	53	56	57	59
48	3	4	6	8	10	12	14	16	18	20	22	24	26	28	31	33	34	36	38	40	42	44	46	48	51	52	54	57	58	60
49	3	4	6	9	10	13	14	16	19	20	23	25	26	29	31	33	34	36	39	41	43	45	47	49	52	53	55	58	59	61
50	3	5	7	9	10	13	14	16	19	21	23	25	28	29	31	34	35	38	40	41	44	46	48	50	53	54	56	59	60	62
Repair cycle time (days)	1	2	3	4	5	6	7	8	9	10	11	12	13	14	15	16	17	18	19	20	21	22	23	24	25	26	27	28	29	30

Table 7-4—Continued

b. Resupply Requirement

Resupply rate	Resupply quantity	Resupply rate	Resupply quantity	Resupply rate	Resupply quantity	Resupply rate	Resupply quantity
1	1	26	7	51	13	76	19
2	1	27	7	52	13	77	20
3	1	28	7	53	14	78	20
4	1	29	8	54	14	79	20
5	2	30	8	55	14	80	20
6	2	31	8	56	14	81	21
7	2	32	8	57	15	82	21
8	2	33	9	58	15	83	21
9	3	34	9	59	15	84	21
10	3	35	9	60	15	85	22
11	3	36	9	61	16	86	22
12	3	37	10	62	16	87	22
13	4	38	10	63	16	88	22
14	4	39	10	64	16	89	23
15	4	40	10	65	17	90	23
16	4	41	11	66	17	91	23
17	5	42	11	67	17	92	23
18	5	43	11	68	17	93	24
19	5	44	11	69	18	94	24
20	5	45	12	70	18	95	24
21	6	46	12	71	18	96	24
22	6	47	12	72	18	97	25
23	6	48	12	73	19	98	25
24	6	49	13	74	19	99	25
25	7	50	13	75	19	100	25

Table 7-5. Maintenance Covered Shop Space Requirements

	1	2	3	4
1	TOE	Unit	Space allowance (sq m)*	Overhead clearance
2	8-610H	Team EB, med equip maint (mdm)	49	3.05
3	8-610H	Team EC, med equip maint (large)	70	3.05
4	8-667G	Army med dep	107	3.05
5	10-337G	QM air equip spt co, abn div	10,000	4.26
6	10-407G	QM airdrop sup co	11,150	4.26
7	10-417G	Airdrop equip rep and sup co	3,000	4.26
8	10-500G	Team EA, air dlvr det—fixed—50 tons	3,720	4.26
9	10-500G	Team EC, prcht and tex renv det—fixed—11,500	1,860	4.26
10	10-500G	Team ED, airdrop S&S det—fixed—11,500	465	4.26
11	10-500G	Team EF, SF prcht rigging det	465	4.26
12	10-500G	Team EG, air equip and spt det (abn)	465	4.26
13	10-500G	Team HA, refrigeration det—mbl	233	4.26
14	10-500G	Team HB, refrigeration det—smbl	465	4.26
15	10-500G	Team HC, refrigeration det	698	4.26
16	29-134G	LE GS maint co	634	4.57
17	29-137G	Hv equip GS maint co	975	4.57
18	29-139G	Coll and clas co	585	4.57
19	29-207G	Lt maint co, DS	650	4.57
20	55-465G	Trans acft dep maint bn (seaborne)	3,430	----------

*Does not include open storage space that the units will require to support their shop operations.

7-5. Vehicle Losses

Estimated daily losses in combat divisions of general-purpose vehicles destroyed and evacuated, per 1,000 of actual vehicle strength, are given in table 7-6.

7-6. Floating Aircraft Maintenance Facility

a. General. The floating aircraft maintenance facility (FAMF) is a converted seaplane tender manned by the transportation aircraft depot maintenance battalion (seaborne) (TOE 55-465G) and a civilian crew (Military Sealift Command). The battalion, composed of a headquarters and headquarters company (HHC) (fig. 7-4) and an operating company (fig. 7-5), is a flexible, mobile organization, deployable to any part of the world on short notice. The battalion has the capability to continue maintenance operations in transit, since all shop and laboratory functions are located physically aboard the vessel, which has organically supplied utilities.

b. Mission. The mission of the battalion is—

(1) To provide depot maintenance for Army aircraft components, avionic equipment, aircraft armament systems, and parachutes.

(2) To provide direct support and general support maintenance for Army aircraft, avionic equipment, aircraft armament systems, and parachutes to combat, combat support, and combat service support elements in a combat zone where facilities of land-based service organizations are not immediately available.

c. Maintenance Capability. The battalion can provide—

(1) Limited airframe repair.

(2) Aircraft turbine-engine rebuild, overhaul, repair, and test.

(3) Aircraft component rebuild, overhaul, repair, and test.

(4) Aircraft communication, navigation, flight control, and surveillance equipment rebuild, overhaul, repair, and test.

(5) Aircraft armament system rebuild, overhaul, repair, and test.

(6) Repair, repack, and certification of personnel parachutes, air-delivery systems, and ejection-seat systems.

(7) Repair, calibration, and certification of test, measuring, and diagnostic equipment.

(8) Crash damage analysis facilities.

(9) Evaluation of low-time components for return to service.

(10) Evaluation of all types of aircraft components for determination of disposition.

(11) Extensive laboratory and test facilities.

(12) Other types of manufacturing, repair, rebuild, test, and service facilities, to include—

Table 7-6. Divisional Vehicle Losses (Daily)

	1	2	3
1	General type of operations for the force as a whole	Destroyed	Required repair by unit maintenance section [a]
2	Infantry division in attack of fortified position	27	27
3	Infantry division in attack of deliberately organized position	16	15
4	Infantry division in attack of hastily organized position	10	10
5	Infantry division in covering, security force, retirement, or delaying action	5	5
6	Infantry division in defense of position	9	7
7	Infantry division in inactive situation [b]	3	2
8	Infantry division in pursuit	5	5
9	Infantry division in assault of hostile shore	27	30
10	Infantry division in reserve	Negligible	[c]2
11	Armored division in attack	16	15
12	Armored division in inactive situation [b]	3	2
13	Armored division in pursuit or exploitation	5	8
14	Armored division in retirement or delaying action	5	5
15	Armored division in reserve	Negligible	[c]2

[a] These quantities are in addition to the number in unit maintenance section each day for scheduled servicing.
[b] Forces in contact, neither side attacking.
[c] These figures do not apply during rehabilitation.

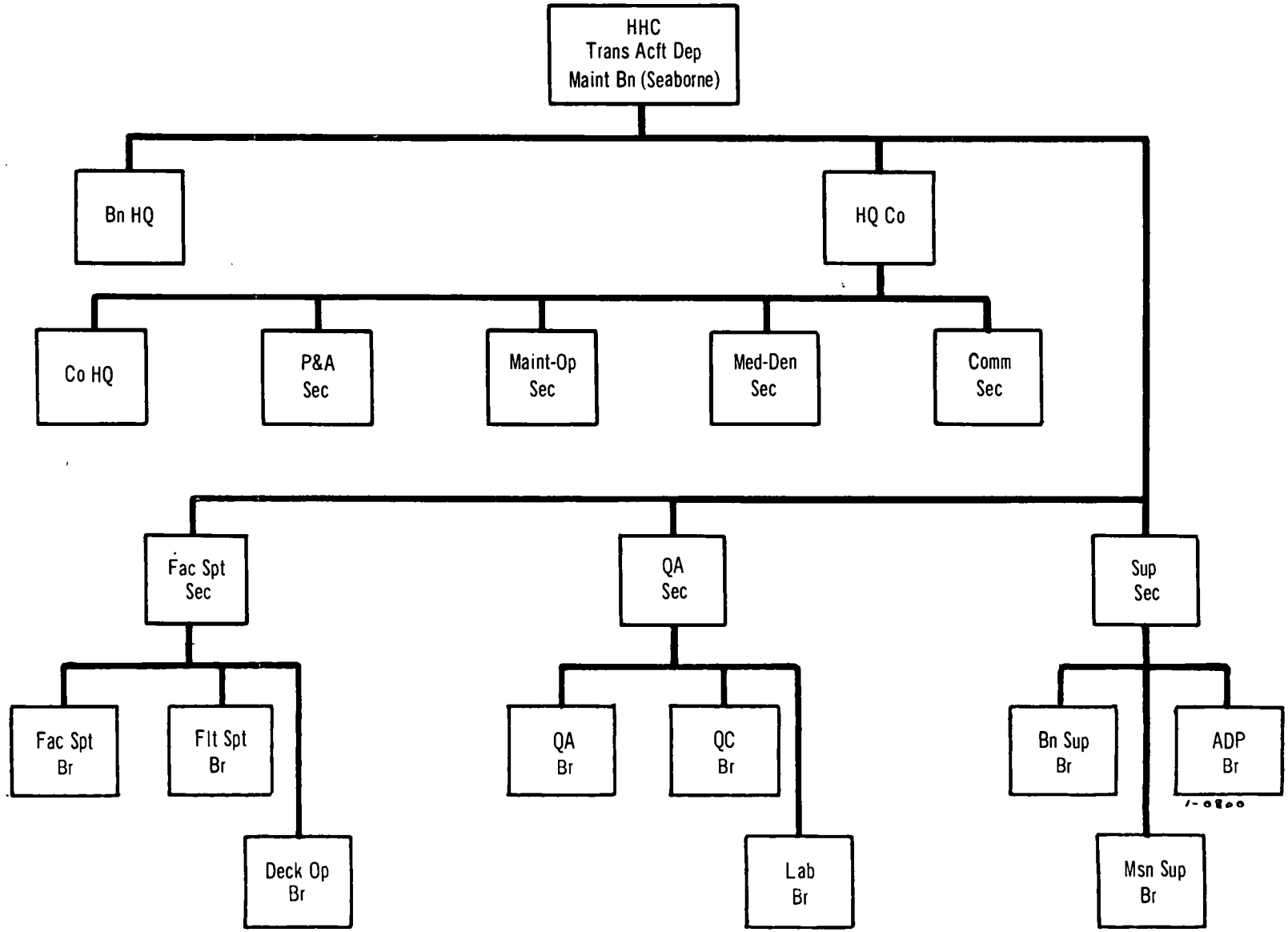

Figure 7–4. HHC, transportation aircraft depot maintenance battalion (seaborne) (TOE 55–466G).

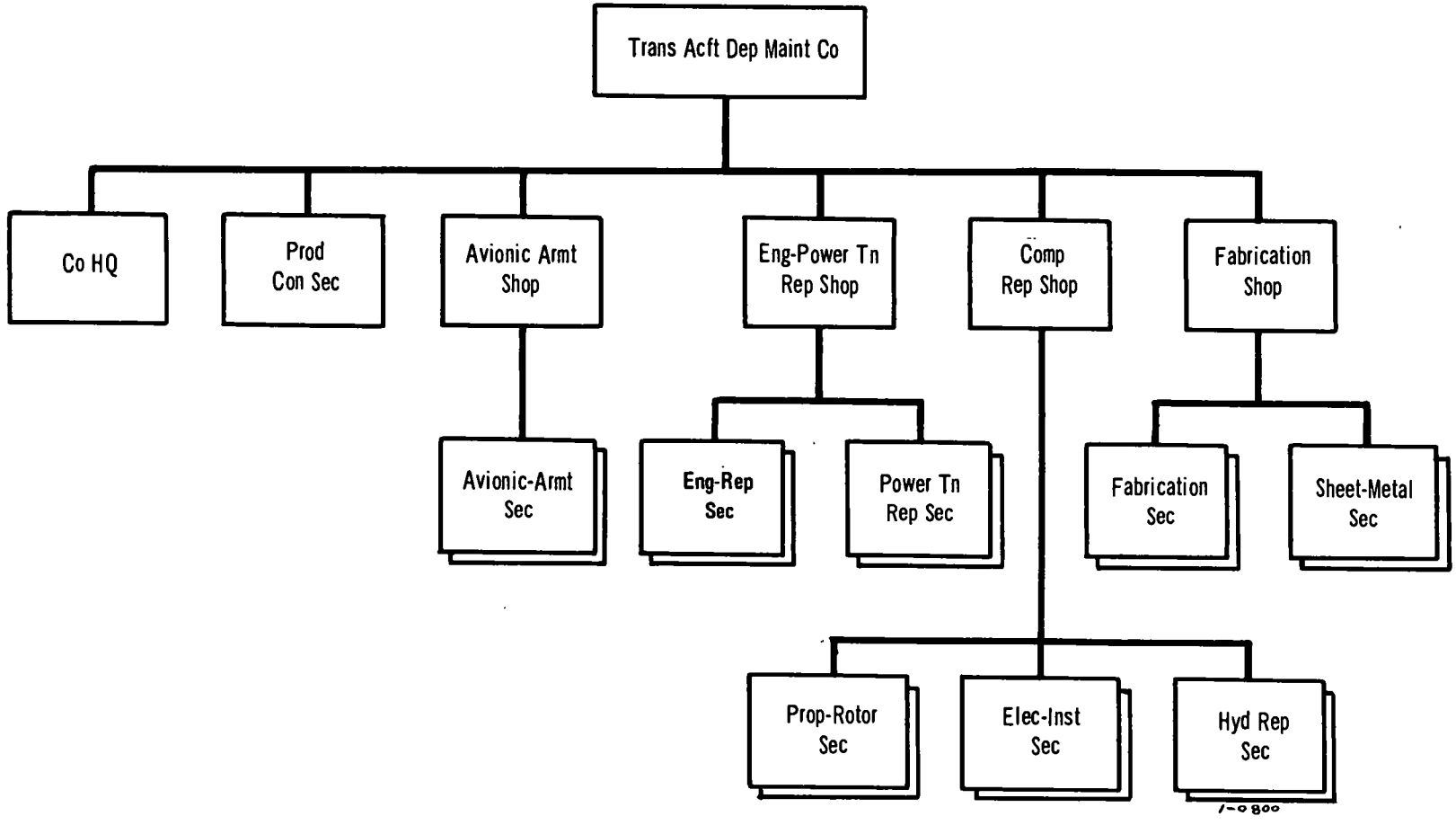

Figure 7–5. Transportation aircraft depot maintenance company, transportation aircraft depot maintenance battalion (seaborne) (TOE 55–467G).

Table 7–7. FAMF Functional Shop Capability

1	1	2	3	4	5	6	7	8	9
	Item	Shop							
		Engine and power train	Component repair	Support platoon	Avionics	Armament	Crash damage analyais	Parachute repack	Total
2	Function	Turbine-engine, transmission, rotor head, and fuel system; bearing reclamation.	Propeller; rotor; electrical, hydraulic, and instrument systems.	Machine, sheet metal, painting, welding, diagnostic, test, electroplating, packing, and preservation.	Communications, navigation, and flight control.	Weapons and system fire control.	Technical teardown and investigation of crash damage components.	Personnel, air delivery system, and ejection seat system.	
3	Assigned direct labor [1]	54	52	42	16	4	3	4	175
	Man-hours per month:[2]								
4	Category II	13,284	12,792	10,332	3,936	984	728	984	43,050
5	Category III	14,364	13,832	11,172	4,256	1,064	798	1,064	46,550

[1] 100-percent TOE strength.
[2] Category II totals apply when the unit is employed in a direct support role. Category III totals apply when the unit provides general- and depot-level support.

(*a*) Sheet metal.

(*b*) Welding.

(*c*) Heat treatment.

(*d*) Machine.

(*e*) Chemical cleaning.

(*f*) Hydraulic.

(*g*) Instrument.

(*h*) Electrical.

(*i*) Bearing.

(*j*) Photographic laboratory support.

(*k*) Chemical and magnetic-particle inspection.

(*l*) Fluorescent penetrant.

(*m*) Metallurgical laboratory support.

(*n*) Sonic cleaning.

(*o*) Tool and die making.

(*p*) Electroplating.

(*q*) Fuel and oil analysis.

(*r*) Drycleaning (e.g., safety belts, shoulder harnesses).

(13) Painting, packing, and crating, to include crate fabrication.

(14) Printing shop, to include fabrication and reproduction of such items as forms, decals, and templates.

(15) Technical library relative to Army aircraft and aircraft components, to include microfilm and reproduction equipment.

(16) Automatic data processing.

d. Functional Shop Capability. Table 7–7 delineates the functional shop capability of the transportation aircraft depot maintenance battalion (seaborne).

e. Vessel Characteristics.

(1) The FAMF provides 67,000 square feet of shop space and 112,400 cubic feet of storage area. It also can transport 18 UH–1 helicopters, provide JP-fuel storage for helicopter operations, produce 85,000 gallons of potable water (50,000 gallons required for ship operations), load aircraft ammunition, pack 20 parachutes daily, provide limited medical support, and function as a helicopter resupply pad.

(2) The draft of the vessel is 24 feet, which can be reduced from 3 to 4 feet when necessary; however, ship operations dictate positioning the vessel in 40 feet of water with a minimum flow rate of 4 knots when operating for a prolonged period. At anchor, a 60-foot water depth is desirable, with a lateral distance of 2 nautical miles to the nearest shore and a swing clearance of 500 meters when secured to a buoy.

Section II. CONSTRUCTION

7–7. Engineer Construction Troops

a. Battalion-Month. One battalion-month is the construction effort of an average experienced and properly equipped engineer construction battalion (CB) during 1 month. For general estimates, the battalion-month represents 125,000 man-hours of construction effort. This effort can be subdivided into 71,000 man-hours of horizontal construction (e.g., earthmoving, drainage, paving, aggregate production) and 54,000 man-hours for vertical construction (e.g., carpentry, plumbing, electrical, and painting). This productivity is based on 100-percent authorized unit strength and each man working a 10-hour day, 6-day week.

b. Force Estimates. The force estimates outlined herein should be used as a general planning guide only. They must be modified for known or expected conditions of particular operations.

c. Unit Equivalents. It is not practicable to state an average factor for construction effort of the various other engineer units, based on the battalion-month yardstick, as defined in *a* above, which is applicable to all types of construction projects. The quantity and type of equipment assigned to the unit and its training are important factors in determining unit effectiveness on a particular type of construction work. For example, an engineer combat battalion is more effective than an engineer CB in repairing roads in a combat zone (average factor 1.3), but an engineer combat battalion is less effective than an engineer CB in constructing a new road in the communications zone (COMMZ), which requires considerable earthmoving (average factor 0.6). The factors in table 7–8 are based on the assumption that, generally, the average construction project in a combat zone requires less heavy equipment than the average construction project in the COMMZ. The factors apply only to properly equipped engineer units of average experience. These factors should be used only in broad planning and do not apply to any one particular construction project. The many factors involved make it advisable that

Table 7-8. Construction Effort Factors

1	1 Unit	2 Average construction effort factor: Combat Zone	3 Average construction effort factor: COMMZ
2	Engr CB	1.0	1.0
3	Engr cbt bn	1.3	0.6
4	Engr cbt bn plus LE co	1.4	0.9
5	Engr CB plus const spt co	1.2	1.4

an experienced engineer officer, *familiar with the technical details of a particular project*, determine the type of engineer unit to be assigned to the construction project, whenever practicable.

7-8. Roads

a. Road Nets.

(1) Construction and maintenance of roads in a theater of operations are held to the minimum required by the situation and are based on maximum use of the existing road net. The capacity of roads of various types, in short tons (STON) forward per day, is given in paragraph 6-40.

(2) Normally, the minimum two-lane road nets to be provided and maintained are as follows:

(*a*) In the combat zone—

1. One earth road per division forward of division rear boundary.

2. Two improved (e.g., gravel, crushed rock) roads per corps forward of field army rear boundary.

3. Lateral improved roads at 16-kilometer intervals in rear of division rear boundary.

4. Access roads, as required, at depots, supply points, and other installations in corps rear and field army service areas.

(*b*) In the COMMZ—

1. Two bituminous-surface-treated roads to each field army service area. Connecting roads, as required, to ports and beaches.

2. Access roads, as required, at depots and other installations in the COMMZ.

b. Construction of New Roads.

(1) *Construction policy.* New road construction is undertaken only when absolutely necessary, and normally it includes only such items as detours to bypass demolitions and access roads.

Table 7-9. Material Requirements for 1 Kilometer of New Road

1	1 Type of road	2 Single-lane 3.7-m (12-ft) wide: STON	3 Single-lane 3.7-m (12-ft) wide: MTON	4 Double lane 7.3-m (24-ft) wide: STON	5 Double lane 7.3-m (24-ft) wide: MTON
2	Earth, graded and drained	2.5	1.9	3.1	2.9
3	102-mm (4-in.) (two-lane 152-mm) (6-in.) stabilized or stone	3.1	2.5	6.2	4.3
4	25-mm (1-in.) cold surface treatment on 102-mm (4-in.) (two-lane 152-mm) (6-in.) crushed stone	18.6	21.1	33.5	42.2
5	25-mm (1-in.) surface treatment on existing base	13.6	18.6	27.3	37.8
6	51-mm (2-in.) cold road mix, cold laid asphalt on 152-mm (6-in.) crushed stone	27.3	38.8	52.7	77.6
7	76-mm (3-in.) cold road mix, cold laid asphalt on 152-mm (6-in.) crushed-run base	35.9	47.7	70.0	94.2

Table 7-10. Gravel or Crushed-Rock Requirements for 1 Kilometer of New Road

1	1 Type of road	2 Surface 3.7-m (12-ft) wide: Cu m (cu yd)	3 Surface 3.7-m (12-ft) wide: STON	4 Surface 7.3-m (24-ft) wide: Cu m (cu yd)	5 Surface 7.3-m (24-ft) wide: STON
2	102-mm (4-in.) base *	371 (485)	726	742 (970)	1,452
3	51-mm (2-in.) asphalt surface	185 (243)	363	370 (485)	726
4	152-mm (6-in.) base *	557 (728)	1,082	1,114 (1,456)	2,164
5	76-mm (3-in.) asphalt surface	278 (364)	546	556 (728)	1,092

*Based on loose thickness. For compacted thickness, add 25 percent.

*Table 7-11. Fixed-Bridge Superstructure Requirements for 1 Kilometer of Road **

1	1	2	3	4	5	6	7	8	9
					One-lane			Two-lane	
1	Type of span	Percentage	Meters (ft)	STON	MTON	Man-hours	STON	MTON	Man-hours
2	4.2- to 6.1-m (14- to 20-ft) timber—cl-25	20	1.5 (5.0)	2.7	2.6	45	3.0	4.0	75
3	9.2-m (30-ft) span, 6- to 27-in. WF beams—cl-60	21	1.6 (5.2)	NA	NA	NA	3.0	2.5	35
4	18.2-m (60-ft) span, 6-to 36-in. WF beams—cl-60	24	1.8 (6.0)	NA	NA	NA	3.6	3.2	46
5	24.3-m (80-ft) span, 9- to 36-in. WF beams—cl-60	12	0.9 (3.0)	NA	NA	NA	2.7	2.4	30
6	27.3- to 36.5-m (90- to 120-ft) span, 6- to 48-in. steel girders—cl-60	11	0.8 (2.7)	NA	NA	NA	3.2	2.6	30
7	39.6-m (120-ft) Bailey, through-truss, DD	12	0.9 (2.9)	4.9	5.5	64	9.3	10.6	122
8	Total	100	7.5 (24.8)	NA	NA	NA	24.8	25.3	338

*Does not include substructure.

The factors in tables 7–9 through 7–13 are given primarily for estimating rehabilitation as a percentage of the requirements for new construction.

(2) *Bridge and culvert requirements.* For planning, 1 kilometer of new road presumably requires 7.5 meters (24.8 ft) of bridging and from 3.7 culverts in flat terrain to 13 culverts in mountainous terrain.

(3) *Material requirements.* Material requirements for 1 kilometer of new road (including bridges and asphalt for surfacing, but not shoulders) are given in tables 7–9 and 7–10.

(4) *Fixed-bridge superstructure requirements per kilometer of road.* Table 7–11 provides fixed-bridge superstructure requirements for 1 kilometer of road, based on 7.5 meters (24.8 ft) of bridging per kilometer of route and on average percentages of the various types of standard military bridging spans. Timber bridge data are based on typical timber bridging with 4.6-meter (15-ft) wood stringers (TM 5–312). Semipermanent steel highway bridging is described in TM 5–302 and TM 5–312. One-lane bridging is not applicable to wide-flange (WF)-beam bridges. Bridging is estimated at 75-percent timber and 25-percent steel stringers on wood substructures.

(5) *Construction effort.* Table 7–12 shows the net effective man-hours of engineer construction effort required for grading and surfacing 1 kilometer of new road to the following standards: one-lane road (3.5-m traffic lane plus 1.2-m shoulders); double-lane road (7.3-m traffic lane plus 1.2-m shoulders). The table is based on pit-bank-run gravel, except for lines 6 and 7, which are based on crushed rock. Man-hour efforts for bridging and culverts are not included.

c. Road Rehabilitation. Materials and effort required to rehabilitate roads after action, in percentages of the materials and effort required for new construction, are shown in table 7–13.

d. Road Maintenance. After rehabilitation, and not allowing for further damage in action, suitably trained and equipped engineer troops main-

Table 7-12. Construction Effort in Man-Hours for 1 Kilometer of New Road

1	1	2	3	4	5	6	7
		One-lane plus 1.2-m (4-ft) shoulders			Double-lane plus 1.2-m (4-ft) shoulders		
1	Terrain	Grading only	Grading and 152-mm (6-in.) gravel	Grading 152-mm (6-in.) gravel and 76-mm (3-in.) asphalt	Grading only	Grading and 152-mm (6-in.) gravel	Grading 152-mm (6-in.) gravel and 76-mm (3-in.) asphalt
2	Swamp, avg 4-ft fill, no vegetation	2,090	4,640	7,440	3,100	6,850	8,250
3	Flat prairie, avg vegetation, 0 to 20% rock	1,140	2,840	4,710	1,690	4,190	5,130
4	Rolling, avg vegetation, 0 to 20% rock	3,730	5,800	7,650	5,520	8,270	9,300
5	Hilly, forested, 0 to 20% rock	7,200	9,240	11,480	10,670	13,670	14,800
6	Mountain, forested, no rock	9,600	11,810	14,210	14,230	17,480	18,700
7	Mountain, 1 to 20% rock	16,000	18,210	20,610	23,700	26,750	28,170
8	Mountain, 20% rock	21,600	23,810	26,210	32,000	32,250	36,470

Table 7-13. Rehabilition—Equivalent Percentages

	1	2
1	Rehabilitation of—	Equivalent percentages of new construction
2	Roads	10 to 20
3	Culverts	15
4	Bridges	50 to 90

Table 7-14. Construction Requirements for 1 Kilometer of Standard-Gage Railroad

	1	2	3	4
1	Item	STON	MTON	Man-hours
2	Grading	------	------	3,100
3	Ballast delivered	------	------	1,550
4	Track laying and surfacing	------	------	2,100
5	Bridging—13.25 m per km	79	68.9	2,000
6	Culverts—4 per km—avg 12-m length.	5	4.3	870
7	Ties—1,798	60	120.0	------
8	Rail—90 lb	98	43.0	------
9	Fastening (based on 11.9-m rail).	21	6.2	------
10	Total	263	242.4	9,620

tain roads on the basis of 9½ man-hours' net effective effort per kilometer of road per day.

e. Policy for Road and Bridge Construction.

(1) *Responsibility.* Bridging normally is on an area basis between the combat zone and the COMMZ. Theater army support command (TASCOM) forces take over bridging operations in rear of the field army area as rapidly as possible. Rearward elements assume bridge and road maintenance in forward areas as soon as the situation permits. Rearward engineer units replace tactical and other portable types of bridging with nonportable types as quickly as possible, strengthen bridging to carry successively heavier loads, and remove such tactical bridging as the situation justifies.

(2) *General bridge policy.* Tactical bridging normally is placed by corps engineers. Organizational equipage is replaced as quickly as possible by rearward engineers. Stocks of WF-beam, girder, I-beam, 27.4-meter (90-ft) pony-truss bridging, and timber trestle bridging with steel beams are available in depots for use in the COMMZ and in the combat zone when time and the tactical situation permit. Bailey bridging will be used primarily in the combat zone. Replaced and surplus bridging is returned to depots.

7-9. Railway Construction

a. New Construction.

(1) The railroad division used in planning includes 160 route kilometers of main line, single or double track, together with its terminal operating and maintenance facilities; fueling and watering facilities, as required; and necessary signaling equipment or interlocking facilities for safe operation. Passing sidings on single-track

Table 7-15. Rehabilitation Requirements for 100 Kilometers of Railroad

	1	2	3	4	5	6	7
1	Item	Quantity per 100 km	Demolition percentage	Amount of rehabilitation	Materials [1] STON	Materials [1] MTON	Man-hours [1] (thousands)
2	Main line	100 km	13	13 km	2,370	1,560	42.3
3	Port trackage [2]	3 km	100	3 km	894	683	13.7
4	Passing sidings [2]	4.5 km	80	3.6 km	1,075	821	10.6
5	Station sidings [2]	3 km	80	2.4 km	717	548	7.4
6	Railway terminal [2 3]	1 each	75	75 percent	4,410	4,230	100.0
7	Water stations	2 each	100	2 each	84	131	5.6
8	Fuel station	1 each	100	1 each	13	11	0.6
9	Bridging	1,325 m	70	929 m	5,530	4,830	140.0
10	Culverts	5,300 m	15	797 m	74	65	13.0
11	Grading						21.8
12	Ballast						27.4
13	Total				15,167	12,879	382.4

[1] Tunnels require special consideration. To repair (by timbering) a 15-m demolition at each end of a single-track tunnel (30 m total per tunnel), allow 70 STON, 87 MTON, and 3,000 man-hours.

[2] Estimate includes ties, rails, fastenings, turnouts, and track laying and surfacing. It assumes ballast is available at worksites.

[3] Includes replacement of buildings 100 percent, ties 30 percent, and rail and turnouts 85 percent.

Table 7-16. Port Construction Requirements

1	2	3	4	5	6	7	8	9	10
1 Item	5-foot tide			15-foot tide			25-foot tide		
	STON	MTON	Man-hours	STON	MTON	Man-hours	STON	MTON	Man-hours
Port									
2 Steel-frame building, 2,434-sq m (building shell)	128	245	5,523	128	245	5,523	128	245	5,523
3 Wood-frame building, 2,716-sq m (building shell)	250	304	8,413	250	304	8,413	250	304	8,413
4 Railroad, 2.74-km	615	519	11,170	615	519	11,170	615	519	11,170
5 Road, 1.77-km, two-lane (macadam and asphalt)	59	75	13,480	59	75	13,480	59	75	13,480
6 Other construction on land	276	358	17,725	276	358	17,725	276	358	17,725
7 Railroad approach trestle, 27.5-m by 130-m	2,034	2,951	27,020	2,222	2,953	27,250	2,498	3,633	33,850
8 Pier, timber, 27.5-m by 150-m	2,420	3,629	29,040	2,652	4,037	29,200	2,956	4,485	35,430
9 Ramp, landing, 800-sq m	----	----	2,220	----	----	6,660	----	----	11,100
10 Wharf, lighterage, 11-m by 150-m	623	878	11,770	623	878	11,770	623	878	11,770
11 Total port, using steel frame	6,155	8,655	117,950	6,577	9,065	122,780	7,155	10,193	140,050
12 Total port, using wood frame	6,277	8,714	120,840	6,699	9,124	125,670	7,277	10,252	142,940
Wharves									
13 Wharf, timber, 18-m by 150-m	1,678	2,485	21,340	1,831	2,753	21,780	2,040	3,062	24,610
14 Wharf, railroad approach trestle, 30-m	282	405	5,900	310	451	6,040	343	401	6,820
15 Wharf, road approach, 30-m	84	121	3,230	91	133	3,240	100	146	3,460

*Wood frame only plus tentage material.

lines, stations, and crossovers at double-track lines and stations are at intervals as required by the traffic. Normally, at least one spur or siding is provided at each station.

(2) Materials and man-hours (net effective) required for new construction of 1 kilometer of standard-gage (1.435 m (4 ft 8½ in)), single-track railroad are shown in table 7–14. Grading includes clearing based on average wooded terrain. Ballast is supplied from bank-run material and the average haul is 5 kilometers.

b. Rehabilitation. Table 7–15 reflects the rehabilitation requirements that can be anticipated for a 100-kilometer standard-gage, single-track line extending inland from a port, using average percentages of demolition over the entire line. FM 55–20 provides further information.

7–10. Water Terminal Construction

a. Approximate Planning Factors for Material and Man-Hour Requirements.

(1) Table 7–16, based on data in TM 5–301, shows the material and man-hour requirements for the construction of new water terminal facilities adequate for the handling of 1,440 STON of discharge dry cargo per day in a 20-hour operation. This is a convenient unit because it is the wharf discharge rate of two ships, Victory-type, as given in paragraph 6–5*d*. The facilities include ship or lighterage wharf space (150 m), access road from wharf to road net, and minimum covered and open storage.

(2) Table 7–17 shows the material and man-hour requirements for the rehabilitation of a 150-meter deep-draft wharf, clearance of debris, and new construction of other terminal facilities for 720 STON per day. This includes repair of cratered wharf faces by timber and V-trestle construction to a width of 18 meters.

Table 7–17. Rehabilitation, 150-Meter Deep-Draft Wharf

	1	2	3	4
1	Item	STON	MTON	Man-hours
2	Repair of 150-m deep-water wharf.	1,375	2,910	25,000
3	1.12-km access road, asphalt-surfaced, 7.3-m wide.	70	87	14,000
4	3.2-km railroad, including sidings.	822	710	14,500
5	929-sq m (10,000-sq ft) covered storage.	65	80	1,800
6	5,574-sq m (60,000-sq ft) open storage.	------	------	50
7	Clearing debris	------	------	2,500
8	Total	2,332	3,787	57,850

Table 7–18. Rehabilitation, 107-Meter Lighterage Wharf

	1	2	3	4
1	Item	STON	MTON	Man-hours
2	Repair of 107-m lighterage wharf.	580	920	10,500
3	1.12-km access road, asphalt-surfaced, 7.3-m wide.	70	87	14,000
4	3.2-km railroad, including sidings.	822	710	14,500
5	929-sq m (10,000-sq ft) covered storage.	65	80	1,800
6	5,574-sq m (60,000-sq ft) open storage.	------	------	50
7	Clearing debris	------	------	1,100
8	Total	1,537	1,797	41,950

Table 7–19. Average Demolition of Port Facilities

	1	2
1	Facility	Average demolition
2	Permanent wharves or quays.	30 percent very badly damaged; early repair impracticable. 30 percent heavily damaged; much debris; reasonably early repair possible. 40 percent lightly damaged; less debris; early repair practicable.
3	Port cranes	100 percent destroyed.
4	Port warehouses	50 percent to 100 percent destroyed.

(3) Table 7–18 shows the material and man-hour requirements for the rehabilitation of a 107-meter lighterage wharf, clearance of debris, and new construction of other port facilities for 720 STON per day. This includes repair of cratered wharf faces by timber or steel-sheet pile.

b. Construction Rate for Pile-and-Timber Wharves. Normally, one engineer construction company constructs 150 meters of deep-draft marginal wharf, or equivalent, in 6 days. These rates cannot be improved by using a force larger than a company on one wharf structure of this size because of the sequences necessary in pile driving, capping, bracing, and deck construction.

c. Demolition of Existing Facilities. Table 7–19,

based on experience factors in the invasion of developed harbors, indicates the average percentages of demolition to be anticipated. Additionally, the removal of sunken wrecks or blockships may be required, normally two or three in a small harbor, 10 or 20 in a large one. If the harbor entrance is narrow, it usually is found blocked.

d. Utilities Required at Ship Wharves.

(1) *Fresh water.* With pressures normal in municipal water supply, one 4-inch pipeline with three 1½-inch outlets refills a Liberty ship's capacity of 115,000 gallons in 6 hours.

(2) *Illumination.* Five-hundred-watt incandescent lamps, mounted 10.5 meters above the wharf deck and spaced at intervals of 35 meters, provide adequate illumination averaging 1 to 2 foot-candles.

e. Construction Factors for Specific Types of Marginal Lighterage Wharves Per 30 Meters. Construction factors for lighterage wharves are illustrated in table 7–20.

f. Construction Factors for Floating Pontoon Wharves. A floating wharf suitable for a Victory or a Liberty ship berth is 6 pontoons wide by 72 pontoons long, or 13 by 123 meters. Four approaches, each 4 by 18 pontoons (8.5 by 33.0 m) usually are adequate. Total area of wharf and approaches is 2,854 square meters. The construction factors are as indicated in table 7–21.

Table 7–20. Construction Factors, Lighterage Wharf

	1	2	3	4
1	Type of conatruction	STON	MTON	Man-hours
2	Timber pile, 10.7-m wide, using 12-in piles.	171	228.0	2,400
3	Timber crib, supporting timber bents, 10.7-m wide.	143	193.0	2,800
4	Timber retaining wall (Wakefield pile) with earth or rubble fill.	21	30.5	1,300
5	Steel-sheet-piling retaining wall with earth or rubble fill.	27	25.0	1,100

Table 7–21. Construction Factors, Pontoon Wharves

	1	2	3	4
1	Floating pontoon wharves	STON	MTON	Man-hours
2	Per 93 sq m	42	127	343
3	Wharf and approaches, as above 2,854 sq m.	1,290	3,900	10,535

Table 7–22. Construction Requirements for Over-the-Beach Discharge of Cargo

	1	2
1	Facility	Man-hours
2	Amphibious vehicle ramp, 17-m wide by 30-m long by 0.45-m deep.	930
3	Landing craft ramp (LCU/LCM/LST), 8.8-m wide by 30-m long by 0.45-m deep.	480
4	Hardstands and beach stabilization, 30-m wide by 30.4-m long by 0.15 deep.	555
	Maintenance:	
5	Ramps: 10 percent of initial effort per month	------
6	Hardstands and beach stabilization: 10 percent of initial effort per quarter.	------

Note. See paragraph 7–8 for road construction factors.

g. Construction Requirements for Over-the Beach Discharge of Cargo. Construction requirements for over-the-beach discharge of cargo include the construction of ramps, hardstands, egress roads, and beach stabilization. Generally, local materials are used. The length of the ramps varies, depending on beach gradient and tidal range. The length of the ramp can be computed by the following formula:

Beach gradient (m per 100 m) × (tide range (m) ÷ 1.2) = ramp length (m)

The man-hours required for the construction of 30 meters of various types of ramps, hardstands, and beach stabilization are as shown in table 7–22.

7–11. Dredging

Dredging of harbors is a slow operation and should be avoided in a military operation, when possible. Likewise, plans should not call for dredging near quay walls because of the danger of damaging foundations. Generally, demolition debris can be cleared in front of berthing sites by using dragline or clamshell cranes. If dredging of harbor areas is unavoidable, the overall planning factors in table 7–23 may be used as a guide. Dredging quantities vary considerably with the type of equipment used, the distance of haul to the spoil area, the method of haul, and the kind of material being excavated (e.g., sand, mud, gravel, soft rock or coral, hard rock). Large-capacity shovels with clamshells or draglines may be mounted on barges and floated to the site.

7–12. General Construction

a. General. This paragraph presents planning factors for engineer standards and man-hours re-

Table 7-23. Dredging Planning Factors

1	Item	2	3	4	5
		Type of dredge			
		Hydraulic suction [1]	Dipper	Clamsbell or orange peel	Seagoing bopper [2]
2	Size	12- to 18-in. pipe	1.5- to 12.0-cu m	1- to 7-cu m	385- to 6,230-cu m
3	Operating personnel	Varies from 12- to 90-man crews, depending on size of dredge and number of shifts being worked.			
4	Operating characteristics and principal use.	Best in soft or loose material, but can also dig firmer material, varying from compacted sands and conglomerates to some types of coral.	Clay, loose rock, or debris excavation. Generally requires loading in scows for disposal.	Dredging in limited areas, caisson work, debris clearance. Generally requires loading in scows for disposal. The material dredged is of the softer type, such as silt and mud.	Outer harbor work. Spoil area may be several miles away.
5	Maximum swells affecting operations.	0.9 m (3 ft)	1.5 m (5 ft)	1.5 m (5 ft)	Designed for dredging in rough water.
6	Maximum dredging depth	7.6–19.8 m (25–65 ft)	6.0–15.2 m (20–50 ft)	Great depths	11.0–18.2 m (36–60 ft)
7	Average daily capacity [3]	2,180 cu m (12-in. pipe)	1,500 cu m (1.5 cu m dipper)	450 cu m (1-cu m clamshell or orange peel).	4,000 cu m (385-cu m hopper).
		20,000 cu m (28-in. pipe)	6,900 cu m (12.0-cu m dipper)	3,200 cu m (7-cu m clamshell or orange peel).	15,000 cu m (6,230-cu m hopper).

[1] Disposal is by pipeline to upland disposal areas or in water areas a sufficient distance from the dredged areas to prevent significant infill.
[2] Hopper dredges are used primarily in dredging inlet cbannels leading from exposed offshore areas to a sheltered harbor. In a military operation, it is probable that all other dredging will be accomplisbed with local dredges of other types.
[3] Based on 24-bour operation at 60-percent effective time.

quired for construction of facilities in the following categories (table 7–24):

(1) Troop comps.

(2) Administration facilities.

(3) Hospitals.

(4) Storage facilities.

(5) Prisoner of war camps.

(6) Shops.

(7) Refrigerated storage facilities.

(8) Iceplants.

(9) Personnel service facilities, including laundries, drycleaning plants, recreation centers, and base post offices.

b. Troop Camps.

(1) *Standards.* Troop camp requirements are estimated in six standards intended for varying degrees of permanence.

(a) *Standard 1.* TOE tents; no engineer materials or effort involved.

(*b*) *Standard 2.* Class IV tents pitched by using troops; engineer effort for roads and site preparation.

(*c*) *Standard 3.* Buildings with floors for administration, bathhouses, dispensaries, storehouses, and kitchens. Class IV tents with floors for housing and with earthen floors for all other purposes. Roads within the installations stabilized with local materials. Water piped from central storage tank to dispensaries, bathhouses, and kitchens. Electric distribution to buildings. Pit-type latrines.

(*d*) *Standard 4.* Buildings with floors for all purposes, except housing. for which there are class IV tents with floors and wood frames. Roads within the installations stabilized with local materials. Water piped from central storage tank to dispensaries, bathhouses, kitchens, and camp exchange. Electric distribution to all facilities. Pit-type latrines.

(*e*) *Standard 5.* Buildings with floors for all purposes; otherwise the same as for standard 4 above.

(*f*) *Standard 6.* Water piped from central storage tank to latrines; latrines equipped so that waterborne, untreated sewage carried 300 meters beyond the confines of the camp; bituminous surfacing of roads within the installations; otherwise, the same as for standard 5 above.

(2) *Structures.* Structures are prefabricated (metal-type) or wood frame for all climates. Table 7–24 indicates man-hour requirements, based on use of metal prefabricated buildings for the various standards of camps in the temperate climate, for from 250 to 3,000 men. For wood-frame buildings, when used, increase man-hour requirements by 8 to 20 percent (higher figure for highest standard). For the drycleaning plant and laundry, the boilerhouse is wood frame only (marked by footnote in table 7–24). Fine and coarse aggregate requirements are not included in material figures because these requirements are assumed to be available in usable form within a short-hauling distance (less than 8 km).

c. Administration Facilities. Estimates are based on three standards—3, 4, and 6. Standard specifications are the same as for troop camps.

d. Hospitals. Estimates are based on four standards as follows:

(1) *Standard 2.* Facilities in tents, with some buildings (clinic, latrines, building for servicing ward patients); hospital tent frames; personnel tents pitched by using troops with no engineer material or assistance. Water piped from central storage tank to necessary facilities. Concrete floors for tentage with frames and for buildings. Waterborne sewage in buildings and pit latrines for° other facilities. Roads unimproved. Electric distribution to all facilities.

(2) *Standard 3.* Same as for standard 2, except that all sewage waterborne, roads stabilized, and additional buildings provided.

(3) *Standard 4.* Same as for standard 3, except that all tents framed and floored and additional buildings provided.

(4) *Standard 6.* Same as for standard 4, except that buildings provided for all facilities and roads bituminous surfaced.

e. Storage Facilities (Depots). Estimates are based on four standards of construction for covered and open, dry cargo storage and three standards for ammunition storage as follows:

(1) *Dry cargo storage.*

(*a*) *Standard 2.* Tents for all facilities requiring cover. Open storage cleared, graded, and drained. Roads graded, but not surfaced.

(*b*) *Standard 3.* Sheds for covered storage; tents with floors for administrative space; without floors for other facilities requiring cover. Roads stabilized. Railroad sidings to open storage areas. Drainage and fencing provided, when required.

Table 7–24. Construction Requirements

a. Troop Camps, Administration Facilities, Hospitals, Storage Facilities, and Prisoner of War Camps

1	1	2	3	4	5	6	7	8	9	10	11	12	13	14	15	16	17
	Item	Man-hours	Electric (kw)	Water/sewage (M gpd)	Site area (sq m)	Man-hours	Electric (kw)	Water/sewage (M gpd)	Site area (sq m)	Man-hours	Electric (kw)	Water/sewage (M gpd)	Site area (sq m)	Man-hours	Electric (kw)	Water/sewage (M gpd)	Site area (sq m)
	Number of men	*Troop Camps*															
		Standard 3				Standard 4				Standard 5				Standard 6			
2	250	7,570	2.2	3.75	31,155	11,070	5.4	3.75	31,155	13,590	5.5	3.75	31,155	14,650	5.5	6.25	31,155
3	500	13,740	7.9	7.50	80,000	23,120	17.3	7.50	80,000	27,890	17.3	7.50	80,000	28,270	17.4	12.50	80,000
4	1,000	28,690	12.6	15.00	164,610	44,250	31.6	15.00	164,610	53,260	31.3	15.00	164,610	53,140	31.4	25.00	164,601
5	1,500	39,555	15.4	22.50	208,000	61,240	39.4	22.50	208,000	73,030	39.1	22.50	208,000	73,900	39.0	37.50	208,000
6	3,000	72,120	27.0	45.00	424,000	118,180	78.0	45.00	424,000	141,970	77.5	45.00	424,000	145,640	78.4	75.00	424,000
	Space (sq m)	*Administration facilities*															Sewage (M gpd)
		Standard 3				Standard 4				Standard 5				Standard 6			
7	930	6,400	12.6	0.25	------	7,120	12.6	0.25	------	------	------	------	------	7,960	12.6	1.25	0.875
8	2,320	15,275	28.5	0.63	------	16,010	28.5	0.63	------	------	------	------	------	17,290	28.5	3.12	2.180
9	4,650	27,850	56.5	1.25	------	28,760	56.5	1.25	------	------	------	------	------	30,810	56.5	6.25	4.375
	Number of beds	*Hospitals*															
		Standard 2				Standard 3				Standard 4				Standard 6			
10	100	29,050	81.2	5.0/2.5	40,470	52,050	111.0	5.0/3.5	40,470	64,740	135.0	5.0/3.5	40,470	75,830	144.0	5.0/3.5	40,470
11	200	38,530	104.1	10.0/5.0	54,500	71,825	184.3	10.0/7.0	54,500	83,530	194.7	10.0/7.0	54,500	106,975	208.0	10.0/7.0	54,500
12	300	60,950	146.0	15.0/7.5	74,500	99,740	246.0	15.0/10.5	74,500	115,520	285.8	15.0/10.5	74,500	136,515	302.0	15.0/10.5	74,500
13	500	77,670	193.9	25.0/12.5	100,000	123,690	309.0	25.0/17.5	100,000	161,700	411.1	25.0/17.5	100,000	186,220	435.0	25.0/17.5	100,000
14	750	98,720	248.0	37.5/18.75	128,500	165,360	407.0	37.5/26.25	128,500	205,840	540.5	37.5/26.25	128,500	249,990	575.0	37.5/26.25	128,500
15	1,000	111,820	276.0	50.0/25.0	157.500	182,840	503.0	50.0/35.0	157,500	245,260	660.0	50.0/35.0	157,500	488,760	698.0	50.0/35.0	157,500
	Space (M sq m)	*Storage, dry cargo*															
		Standard 2 (open)				Standard 4 (open)				Standard 3 (covered)				Standard 5 (covered)			
16	1.11	------	------	------	------	------	------	------	------	4,120	------	------	20,600	7,200	3.1	------	20,600
17	2.32	------	------	------	------	------	------	------	------	6,055	------	------	22,600	10,920	6.7	------	22,600
18	4.65	3,048	------	------	------	5,400	------	------	------	9,400	------	------	39,500	20,010	13.3	------	39,500
19	9.30	5,828	------	------	------	9,420	------	------	------	9,495	------	------	63,750	23,340	27.2	------	63,750
20	18.60	11,018	------	------	------	17,810	------	------	------	------	------	------	------	------	------	------	------

Table 7-24. Construction Requirements—Continued

a. Troop Camps, Administration Facilities, Hospitals, Storage Facilities, and Prisoner of War Camps—Continued

	1	2	3	4	5	6	7	8	9	10	11	12	13	14	15	16	17
1	Item	Man-hours	Electric (kw)	Water/sewage (M gpd)	Site area (sq m)	Man-hours	Electric (kw)	Water/sewage (M gpd)	Site area (sq m)	Man-hours	Electric (kw)	Water/sewage (M gpd)	Site area (sq m)	Man-hours	Electric (kw)	Water/sewage (M gpd)	Site area (sq m)
	Capacity (tons)	*Storage, ammunition (10 percent covered, 90 percent open)*															
		Standard 2				Standard 3				Standard 5							
21	5,000	66,667			184,000												
22	15,000					221,800			700,000	281,939			700,000				
	Number of PW	*Prisoner of war camps*															
		Standard 2				Standard 3				Standard 4				Standard 5			
23	250	[a] 6,060		1.25	40,000												
24	500	[a] 10,420		2.50	72,000	19,720	39.9	5.00	72,000	25,970	44.0	5.00	72,000	30,590	47.6	5.00	72,000
25	1,000	[a] 13,710		5.00	92,000	29,770	65.9	10.00	92,000	39,960	73.1	10.00	92,000	48,970	73.3	10.00	92,000
26	2,000	[a] 22,740		10.00	160,000	54,030	126.8	20.00	160,000	75,800	138.3	20.00	160,000	93,190	145.5	20.00	160,000
27	4,000	[a] 60,860		20.00	376,000	130,810	394.0	40.00	376,000					199,150	430.4	40.00	376,000
28	[b] 4,000	[a] 51,900		20.00	332,000	102,360	283.0	40.00	332,000					136,960	303.2	40.00	332,000

[a] Wood frame only plus tentage material.
[b] Oriental.

Table 7–24. Construction Requirements—Continued

b. Shop, Refrigerated Storage, Iceplant, and Personnel Service Facilities

1	1 Facility	2 Size	3 Capacity	4 Man-hours	5 Electric (kw)	6 Water (M gpd)
2	Shop (phase I construction)	12.2- by 30.5-m	0.37 M sq m	818		
3	Shop (phase I construction)	18.3- by 91.5-m	1.67 M sq m	2,820		
4	Shop (phase I construction)	24.0- by 73.2-m	1.78 M sq m	3,041		
5	Warehouse, refrigerated	118-sq m		4,171	73.0	
6	Warehouse, refrigerated	223-sq m		5,763	103.0	
7	Warehouse, refrigerated	1,635-sq m		33,470	539.0	0.90
8	Iceplant	1.0-ton		870	0.9	0.25
9	Iceplant	3.6-ton		1,120	15.0	1.00
10	Iceplant	15.0-ton		2,950	47.0	4.00
11	Drycleaning plant, with boilerhouse		1,000-man	*3,620	34.5	0.21
12	Drycleaning plant, with boilerhouse		2,500-man	*4,060	46.0	0.26
13	Drycleaning plant, with boilerhouse		5,000-man	*4,750	74.5	0.40
14	Laundry, with boilerhouse		2,500-man	*6,650	35.4	22.50
15	Laundry, with boilerhouse		5,000-man	*8,620	69.0	47.00
16	Laundry, with boilerhouse		10,000-man	*15,250	117.4	83.00
17	Base post office	1,040-sq m		6,270	8.2	0.09
18	Base post office	1,490-sq m		8,790	21.8	0.13
19	Base post office	7,400-sq m		39,320	49.4	0.52
	Recreation center:					
20	Standard 3		5,000-man		21.4	10.00
21	Standard 4		5,000-man	21,790	28.3	10.00
22	Standard 5		5,000-man	29,400	40.3	10.00
23	Standard 4		10,000-man	36,380	52.5	20.00
24	Standard 5		10,000-man	57,209	79.5	20.00

*Wood frame only plus tentage material.

(*c*) *Standard 4.* Same for standard 3, except that open storage on 152 millimeters (6 in) of crushed stone with asphalt binder. Administration in tents and latrines in buildings.

(*d*) *Standard 5.* Closed buildings for covered storage and administrative facilities. Bituminous-surfaced main access roads to covered and open storage areas; other interior roads stabilized. Railroad sidings to storage areas. Drainage and fencing provided, when required. Electricity provided to all buildings.

(2) *Ammunition storage.*

(*a*) *Standard 2.* Tents for 10 percent of the ammunition tonnage and for administrative facilities. Open storage areas cleared and graded. Latrines in wood-frame buildings. Access roads graded but not surfaced.

(*b*) *Standard 3.* Sheds for 10 percent of the ammunition tonnage. Buildings for administrative facilities. Access roads and parts of open storage areas stabilized with local materials. Railroad sidings to storage areas.

(*c*) *Standard 5.* Ten-percent storage, administrative, checkpoint, shop, and latrines in buildings.

(3) *Shops.* Phase I construction (table 7–24) is described as structural wall, including fastings and roof frame.

f. Prisoner of War Camps. Estimates are based on four standards of permanence (2, 3, 4, and 5) as follows:

(1) *Standard 2.* Tents with earthen floors for all facilities. Bucket-type latrines. Engineer effort required for construction of security fencing, guard towers, and stabilized roads. Open-ditch drainage.

(2) *Standard 3.* Buildings for bathhouse, kitchen, latrines, and generators. All other facilities in tents. Concrete floors in buildings and tents. Electricity to all buildings and tents, except prisoner of war housing. Floodlights. Other construction same as for standard 2.

(3) *Standard 4.* Personnel housed in framed tents. Bucket-type latrines. Other accommodations in buildings. Concrete floors for tents and buildings. Other construction same as for standard 3.

(4) *Standard 5.* All accommodations in buildings. Other construction same as for standard 4.

g. Bivouacs, Camps, and Billets.

(1) *Bivouac areas.* The bivouac area of an infantry battalion varies from 0.093 square kilometer to 2.6 square kilometers, as indicated by the situation. Considerations that affect the area required are the dispersion necessary to reduce the threat of enemy attack, the amount of cover and concealment available, and the characteristics of the terrain. The approximate minimum area required by a unit may be estimated as indicated below.

Note. Both methods should be used and the larger figure should be chosen.

(*a*) *Vehicle dispersion.* When required dispersion of the vehicles with the unit governs, use the following formula:

$$\frac{V \times D^2}{K} = \text{area required, when—}$$

V = number of vehicles with the unit
D = desired dispersion between vehicles
K = conversion factor, as appropriate, to reduce the area to acres, hectares, square miles, or square kilometers

Example. Assume that an infantry battalion has 200 vehicles and dispersion of 100 meters between vehicles is desired. Find the area required.

$$\frac{200 \times (100)^2}{1{,}000{,}000 \text{ (sq m per sq km)}} = 2 \text{ sq km}$$

Personnel will be distributed throughout the area.

(b) *Tent camps—capacity.* Medium general-purpose tent, normal assignment—from 12 to 16 men per tent; area required for an infantry battalion camp (open ground)—approximately 0.13 square kilometer; estimate of area required —50 square meters per man; 100 square meters per vehicle.

(2) *Data on tentage.* Table 7–25 is extracted from FM 20–15 and FM 20–16.

(3) *Space allowances for quarters under theater of operation conditions.*

(*a*) Normal—40 square feet of floor space and 40 cubic feet of airspace per person.

(*b*) Emergency—50 percent of the above.

(4) *Billets.* In hostile or liberated territory, the capacity of a locality for billeting is approximately as follows:

Rich farming country	5 troops per inhabited dwelling
Cities	2 troops per inhabited dwelling
Average American city	20 troops per inhabited dwelling
Vacant buildings and dwellings in average city (civilians may be caused to move to vacancies to concentrate military activities).	10 percent of population
With civilians furnishing subsistence.	10 percent of population for 1 week

Table 7–25. Tentage Data

1	1	2	3	4	5	6	7	8
	LIN	Type of tent	Length (ft)	Width (ft)	Peak height (ft)	Floor area (sq ft)	Weight packed (lb)	Volume packed (cu ft)
2	V47071	Arctic, 10-man, FMWWR*, hexagonal	15.2	17.5	8.5	198.9	76.0	73.
3	V47345	Assembly, M–1942, FMWWR*	80.0	40.0	18.0	2,856.5	1,755.0	100.0
4	V47482	Command post, M–1945, FMWWR*	20.6	10.0	9.0	172.0	257.0	9.9
5	V47756	Aviation maintenance, small, frame	10.0	12.0	12.0	120.0	361.0	26 8
6	V47893	Frame-type, balloon inflation, M–1957	15.2	14.0	12.8	210.0	930.0	56 5
7	V48161	Maintenance, frame, FMWWR*	32.0	20.0	14.0	640.0	2,057.0	237 0
8	V48304	Maintenance, frame, insulated, sectional	16.0	16.0	8.0	256.0	2,410.0	259 5
9	V48578	General-purpose, large, FMWWR*	52.0	18.0	12.0	936.0	820.0	69 0
10	V48989	General-purpose, medium, FMWWR*	32.7	16.0	10.0	512.0	634.0	33 0
11	V49126	General-purpose, small, FMWWR*, hexagonal	15.2	17.5	10.5	198.9	186.0	8 0
12	V49537	Hexagonal, lightweight, M–1950, FMWWR*	11.4	13.3	8.5	113.2	56.0	3 8
13	V49948	Kitchen, flyproof, M–1948	18.0	12.0	9.0	216.0	420.0	26 2
14	V50058	Maintenance shelter, FMWWR*	26.8	18.2	14.0	486.8	1,255.0	84 0
15	V50496	Mountain, two-man	6.8	14.5	3.6	30.8	9.5	0 7
16	V50633	Nike-Hercules, air-supported	71.4	15.4	12.9	995.0	1,425.0	198 0
17	V50907	Radome, air-supported, circular	24.0	24.0	19.7	452.0	1,029.0	85 0
18	V52414	Maintenance, missile test shop	6.0	8.8	8.6	40.0	50.0	3 0
19	V52551	Missile equipment console, pulse acquisition radar, front	6.7	8.0	7.7	50.0	40.0	4.0
20	V52688	Missile equipment console, pulse radar, rear	4.0	8.0	8.6	26.0	40.0	3.5
21	V52825	Missile equipment console, range radar	6.8	8.3	8.3	55.7	60.0	4.0

*Fire-, mildew-, water-, and weather-resistant.

Table 7-26. Housing Requirements Besides Troop Camps

	1	2
1	Facility	Percentage of theater troops
2	Recreation center	5 of total.
3	Reception center	5 of total.
4	Replacement depot	3 of total.
5	Casual camp	1 of total.
6	Ground troop training center.	5 of all ground forces.
7	Service force training center.	5 of all service troops.
8	Labor camp	5 of prewar population in area.
9	Temporary refuge for displaced persons.	5 of prewar population in area.
10	Military prisoners	1 of total.
11	Undesirable civilians (saboteurs, etc.)	5 of prewar population in area.

h. Housing Requirements Besides Troop Camps. Besides those facilities provided for normal housing of troops, it is usually necessary to provide certain installations, based on the percentages of the theater population shown in table 7–26.

i. Office Space. Space allowances for offices under theater of operation conditions are 60 square feet per person employed plus 10 square feet per drafting board.

j. Prefabricated and Standard-Frame Buildings.

(1) The following are the basic units for portable prefabricated, V-lock steel buildings:

(*a*) Barrack, with basic dimensions of 20 feet by 20 feet, 30 feet by 40 feet, 40 feet by 50 feet 8 inches high and expandable in 10-foot-length increments.

(*b*) Warehouse, with basic dimensions of 40 feet by 100 feet by 20 feet high and expandable in 20-foot-length increments.

(*c*) Shop, with basic dimensions of 40 feet by 100 feet by 12 feet high and expandable in 10-foot-length increments.

(*d*) Units of (*a*), (*b*), and (*c*) above are interconnectable without use of especially fabricated parts.

(2) Standard-frame buildings are constructed in various dimensions and designs from standard materials listed in TM 5–302. The large lumber and man-hour requirements involved normally restrict this construction to special-purpose buildings, such as refrigerated warehouses, iceplants, laundries, drycleaning plants, special shops, and facilities for frigid climates.

7–13. Bulk Petroleum Storage and Distribution

a. General. Tables 5–4 through 5–9 contain data pertaining to petroleum; table 5–10 contains types and capacities of pipelines. See TM 5–343 for descriptions, sizes, and operating characteristics of pipeline equipment; AR 708–1 for supply service responsibilities; and TM 10–1100-series for petroleum pipeline and terminal operating procedures and techniques. Engineer troop units construct petroleum distribution systems. A complete pipeline system includes—

(1) Tanker discharge facilities and receiving tank farm at a port or beach (marine terminal).

(2) One or more parallel pipelines.

(3) Tank farms, which generally are spaced from 80 to 120 kilometers apart along the system and vary from 50,000- to 1,000,000-barrel capacity, depending on supply needs and specified theater levels of supply.

(4) Dispensing facilities, which are provided at tank farms and supply points.

b. Pipelines. Four-, six-, and eight-inch diameter, lightweight pipe is standard for military pipeline systems. On level terrain, pump stations are spaced 12.9 kilometers apart for 4-inch lines and 27 kilometers apart for 6- and 8-inch lines. Submarine ship-to-shore lines are 8- inch heavy-welded lines and 12- to 16- and 20-inch concrete-coated lines running from the offshore tanker mooring to the receiving tank farm. These pipelines are provided by the Corps of Engineers as part of the equipment in marine terminal installations. For general planning, the pipeline capacities given for standard military lightweight tubing in table 7–27 may be used. Table 7–28 provides petroleum, oil, and lubricant (POL) products pipeline construction requirements. Although military lightweight steel tubing ordinarily forms most of the length of a pipeline, it normally is not buried, nor is it used for submerged stream crossings or in populated areas and locations where hazards of fire and damage are acute. In situations where lightweight tubing is unsuitable, standard-weight, commercial-type (API) line pipe is the selected military standard for use in petroleum pipelines. TM 5–343 contains detailed information and data on pipeline equipment and a discussion of pertinent pipeline planning considerations where deliberate planning and estimates are needed.

c. Tank Farms.

(1) Based on the theater level of supply, the

Table 7-27. Capacity of Standard Military Lightweight Steel Tubing

	1	2	3	4	5	6	7	8
1	Inside diameter of line (in.)	Nominal tubing size (in.)	Nominal design capacity (bph)	Emergency capacity (bph)	Safe working pressure (psi)	Maximum working pressure (psi)	Gallons per day	Net short tons per day
2	4	4.350	355	393	600	750	298,000	910
3	6	6.415	785	1,000	600	750	660,000	2,000
4	8	8.415	1,355	1,730	500	625	1,140,000	3,480
5	12	12.481	7,150	11,400	400	500	6,000,000	18,300

Table 7-28. POL Pipeline Construction Requirements

	1	2	3	4	5
1	Type	STON	MTON	Man-hours	Rate of construction (km per day)
2	4-in by 12.9-km, with 355-bph pump station	185	221	4,790	12.9
3	6-in by 27-km, with 785-bph pump station	571	893	10,600	12.6
4	8-in by 27-km, with 1,355-bph pump station	589	1,544	11,470	8.4

planner determines the tank farm construction requirements. This may vary from a 30- to 60-day level, depending on the distance of tanker haul and probability of tanker losses through enemy action. Using the planning factor stated in paragraphs 5–6 and 5–7, the amount of construction required may be estimated by the following formula:

> Number of divisions (plus air support) × daily fuel requirement × number of days of level of supply — available existing storage in theater = total storage construction requirement

(2) Table 7–29 provides data for estimating tank farm construction along a pipeline system. These data include the tanks, pipe manifolds to the individual tanks, pumps, valves, etc., necessary for operation of the tank farms. Current doctrine for dispersion of facilities prescribes that not more than 250,000 barrels of bulk storage capacity will be constructed within 6.5 kilometers of another tank farm. Marine terminals listed in the table are used at ports or beaches and include the receiving tank farm and all facilities for offshore mooring of tankers and pumping petroleum products to the tank farm.

d. Pipeline Communications. A petroleum distribution system requires continuous communications between tank farm dispatchers, pump station operators, and pipeline patrol units. The Signal Corps provides both radio-voice and teletypewriter equipment for this communication system. Teletypewriter is used primarily for hourly recording of the flow of products along the pipeline and transmission of dispatching instructions between tank farms (para 3–6).

e. Pipeline Operations.

(1) *General.* Pipeline systems for distributing bulk petroleum fuels in the theater are operated by petroleum groups under the operational control of the TASCOM supply and maintenance command. Petroleum installations extend as far forward into the combat zone as possible. Liquid petroleum fuels can be moved most effectively and economically in bulk form. The distribution plan calls for maximum use of pipelines. Distribution of packaged petroleum fuels (5-gal cans and 55-gal drums) is restricted to the extent essential for adding flexibility to the system. Containers of POL smaller than 55-gallon drums are palletized when shipped to air terminals for subsequent air-landed delivery.

(2) *Supervisory and operating organizations.*

(*a*) *Supervisory.* The following organizations are supervisory:

1. HHD, petroleum group (TOE 10–202). Normal requirements are one per military petroleum distribution system operated by two or more petroleum operating battalions and one per two to five separate military petroleum distribution systems, each operated by a petroleum operating battalion. May be assigned to field army or higher headquarters for petroleum logistic planning and coordination before the establishment of a COMMZ.

Table 7-29. POL Tank Farm Construction Requirements

1	1 Installation	2 Capacity (M bbl)	3 Site area (sq m)	4 STON	5 MTON	6 Man-hours
2	Marine terminal, with submarine pipeline	200	110,000	1,454	2,453	49,280
3	Marine terminal, with jetty	200	----------	1,783	2,713	56,180
4	Marine terminal, with existing dock	200	----------	1,101	2,034	43,580
5	Marine terminal, with submarine pipeline	400	186,000	3,452	6,740	113,590
6	Marine terminal, with jetty	400	----------	3,493	6,660	115,830
7	Marine terminal, with existing dock	400	----------	2,811	5,981	103,230
8	Marine terminal, with submarine pipeline	1,000	440,000	6,650	13,147	242,800
9	Marine terminal, with jetty	1,000	----------	6,692	13,067	245,040
10	Marine terminal, with existing dock	1,000	----------	6,010	12,389	232,440
11	Tank farm, with 6-in. pipeline and accessories	50	42,000	372	575	12,975
12	Tank farm, with 8-in. pipeline and accessories	50	----------	397	610	13,621
13	Tank farm, with 6-in. pipeline and accessories	100	74,000	635	992	20,963
14	Tank farm, with 8-in. pipeline and accessories	100	----------	670	1,047	21,933
15	Tank farm, with 8-in. pipeline and accessories*	150	75,000	917	1,450	29,660
16	Tank farm, with 8-in. pipeline and accessories*	200	76,000	7,031	872	33,695
17	Tank farm, with 12-in. pipeline and accessories*	200	----------	7,801	1,033	34,689
18	Tank farm, with 8-in. pipeline and accessories*	250	102,000	1,420	2,228	45,025
19	Tank farm, with 12-in. pipeline and accessories*	250	----------	1,585	2,514	46,295
20	Tank farm, with 6-in. pipeline and accessories	400	152,000	2,642	4,186	81,155

*Using 10,000-barrel bolted steel tanks.

2. HHC, petroleum operating battalion (TOE 10–206). Normal requirement is one per petroleum port of entry.

(*b*) *Operating.* The petroleum operating company (TOE 10–207) operates four pump stations for a 6- or 8-inch multiproduct line on level terrain. This constitutes the operation of approximately 100 kilometers of pipeline. This company operates a tank farm complex on a 24-hour basis for storage of from 100,000 to 500,000 barrels of bulk petroleum. The complex consists of two tank farms, each with a storage capacity of from 50,000 to 250,000 barrels.

7–14. Nuclear Powerplants

a. General.

(1) Nuclear powerplants operate for extended periods without refueling, thereby eliminating the need for a continuous fuel supply. Nuclear reactors can operate for from 1 to 2 years at full power between refueling.

(2) Another military advantage of nuclear powerplants is their capability to operate independently of combustion air, which makes them suitable for use in underground installations and hardened sites. The capability of nuclear powerplants to respond quickly to large load changes insures precise power over a wide range of load demands.

(3) Disadvantages of nuclear powerplants are the high initial cost, the requirements for protection against radiation hazards, and the special handling required to dispose of radioactive waste.

(4) Military nuclear powerplants presently in use are pressurized water-reactor systems. These systems consist basically of the primary loop and the secondary loop. The primary loop converts the heat generated from nuclear fission in the reactor to steam in the secondary loop through a tube-in-shell heat exchanger, the thermal energy is converted to mechanical energy by a Rankine-cycle steam turbine, which drives an electric generator. In a pressurized water-reactor system, the primary-loop water is maintained above saturation pressure to prevent boiling. Another type of reactor system that is widely in use by industry is the boiling water system. In this system, the reactor is maintained at saturation pressure, and the water is allowed to boil in the reactor vessel. The steam generated in the reactor is directed to the turbogenerator by natural circulation. The heat is rejected by a steam-condensing condenser, which is cooled by water taken from a river, lake, sea, or deep well. In arid areas, the heat is rejected by airblast coolers. The steam generated also can be used in space heating and desalination of sea or brackish water to provide potable water. Nuclear powerplants can be operated in environmental temperatures between — 65° and + 100° F.

b. Stationary Powerplants. Permanent nuclear powerplants capable of electrical outputs of up to 2,000 kilowatts are presently in operation to provide steam and electricity to permanent camps and stations.

c. Portable Powerplants. Portable powerplants, also capable of producing electrical power up to 2,000 kilowatts, are the most readily adaptable to military requirements in remote areas. Prepackaged in the United States, these plants can be transported by air to any location in the world and set up for operation within 90 days after arrival on site. At the close of semipermanent operation, they can be relocated for use elsewhere.

d. Mobile Powerplants. A barge-mounted nuclear powerplant, with electrical output of 10,000 kilowatts, is operational. A floating powerplant, because of its mobility, is particularly attractice for military applications. To enable interconnection with most foreign or domestic systems, the generating system is designed for 50 and 60 cycles, with variable taps on the transformer to obtain the required voltages. Design studies have been completed for barge-mounted nuclear powerplants that have the capability of 50,000-kilowatt electrical output and a million and a half gallons of potable water. These high-powered barges can support coastal support bases accessible by a vessel of less than 20-foot draft. The power output from these floating powerplants can be transmitted to the shore by an aerial cable while the barge is moored at the pier or by submarine cables when it is anchored offshore.

e. Cost. The initial cost of a nuclear powerplant is relatively high when compared with a fossil-fuel steamplant or internal-combustion-engine powerplant. This high cost is due to the high standards under which the components are manufactured and the numerous safety features required to insure a reliable and safe operating plant. Nuclear powerplants are economically competitive with other energy sources when the fuel cost is excessive because these sources are inaccessible; e.g., in remote sites or in underground facilities, where extensive excavation is required for fuel storage.

f. Construction. Construction of a stationary plant takes no longer than that of a conventional plant of the same capacity. A portable plant can be designed, manufactured, and tested for installation in a remote site in 3 years. A barge-mounted nuclear power plant can be built in 4 years.

g. Operators. Nuclear powerplant operators are a carefully selected group of career service enlisted men. Each nuclear powerman specializes as a maintenance technician in mechanical, electrical, or instrumentation areas or as a health physicist.

h. Maintenance. Maintenance requirements for standard power components are similar to those for conventional steam powerplants. However, because of the radiation hazard associated with the nuclear powerplants, the reactor must be shut down for maintenance on the nuclear system. As a result, when high reliability is essential, redundant systems are provided to permit maintenance during operation without affecting plant performance. The reactor also must be shut down periodically for refueling.

i. Helath and Safety. Policies regulating Army nuclear reactor system health and safety procedures are in AR 385–80.

j. Summary. Nuclear power provides distinct logistic; operational; and, under certain applications, economic advantages over conventional systems in military applications. Although high initial cost is currently a deterrent to widespread use of nuclear power, technological advances continually reduce the initial investment and promise competitive status in the foreseeable future. In tactical situations where logistic considerations outweigh costs, there are definite advantages for the use of nuclear power. Only nuclear power can meet the demands for reliable and extended operation in underground installations, where operations must be independent of a continuous fuel supply or the earth's atmosphere.

7–15. Airfield Construction

a. Construction Effort Required for Airfields in a Theater of Operations. This paragraph is for broad planning purposes only. It provides estimates for computing engineer troop support required to construct US Army and US Air Force (USAF) installations in oversea theaters. None of the factors in this section are suitable for the detailed planning required for construction of specific installations. Detailed planning data are in TM 5–330.

(1) *Army airfields.* Table 7–30, extracted from TM 5–301, shows the man-hours required to construct hasty airfields (standard 4) and deliberate airfields (standard 5).

(*a*) Standard 4 provides minimum facilities for operation and maintenance for a period of

Table 7-30. Army Airfield Construction Requirements

1	1 Type	2 Number of aircraft	3 Man-hours	4 Number of aircraft	5 Man-hours	6 Number of aircraft	7 Man-hours	8 Number of aircraft	9 Man-hours
		Hasty airfields—Standard 4							
2	Steel frame and pierced-steel plank	5	18,340	15	23,230	25	34,230	50	63,670
3	Steel frame and vinyl cloth		14,500		17,480		26,470		46,510
4	Wood frame and pierced-steel plank		18,909		24,070		35,070		64,940
5	Wood frame and vinyl cloth		15,150		18,320		27,310		47,780
		Deliberate airfield—standard 5							
6	Steel frame	5	79,640	15	92,170	25	154,350	50	232,190
7	Wood frame		80,550		93,080		155,310		233,460

Table 7-31. Types of Minimum Area Requirements for Helicopters

1	1 Helipad or heliport type	2 Landing or parking pad (sq m)	3 Taxiway (sq m)	4 Runway (sq m)	5 Overrun (sq m)	6 Total traffic area [a] (sq m)	7 Total clear area [b] (sq m)	8 Dustproofing and/or waterproofing area [c] (sq m)
	Forward area helipad							
2	OH-6	13				13	467	1,809
3	UH-1	36				36	900	3,164
4	CH-47	113				113	1,688	15,930
5	CH-54	225				225	2,025	11,610
	Forward area heliport							
6	UH-1 company	900				900	28,179	33,597
7	CH-47 company	1,800				1,800	52,347	83,046
	Support area helipad							
8	OH-6	13				13	993	1,809
9	UH-1	36				36	1,296	3,564
10	CH-47	113				113	2,025	15,930
11	CH-54	225				225	2,025	11,610
	Support area heliport							
12	UH-1 company	900				900	40,959	44,523
13	CH-47 company	1,800	7,380	1,013	450	10,643	87,267	125,522
14	CH-54 company	1,800	8,202	2,025	900	12,036	56,284	75,465
15	Mixed battalion	[d] 10,839	8,342	1,013	450	20,643	181,996	179,460
	Rear area helipad							
16	OH-6	57				57	993	1,809
17	UH-1	144				144	1,296	3,564
18	CH-47	450				450	2,025	15,930
19	CH-54	900				900	2,025	11,664
	Rear area heliport							
20	UH-1 company	3,600				3,600	42,570	46,521
21	CH-47 company	7,200	11,313	1,620	720	20,133	92,250	116,787
22	CH-54 company	5,400	8,735	2,430	1,080	16,565	55,620	76,143
23	Mixed battalion	[d] 21,769	12,330	1,620	720	35,795	189,010	195,303

[a] Traffic area includes parking or landing pad, taxiway, and runway.
[b] Total clear area is the area inside the lateral clearance line.
[c] This area includes the total clear area and an area around the perimeter, the width of which is determined by rotor downwash.
[d] Includes 7,200-sq m maintenance area.

Table 7-32. Battalion-Months To Construct New USAF Airfields

	1	2	3	4	5	6
1	Type of base	Critical aircraft	Runway—minimum length	Emergency operational	Minimum operational	Full operational
2	Tactical (COMMZ)	F-4C F-105	2,440			
3	One wing			6.5	10.0	14.5
4	One squadron			5.5	9.0	12.5
5	Heavy lift (COMMZ)	C-141	3,050			
6	One wing			10.0	12.5	17.0
7	One squadron			9.0	11.0	14.5
8	Medium lift (COMMZ)	C-130	1,830			
9	One wing			3.0	6.5	14.0
10	One squadron			2.0	4.5	7.5
11	Troop carrier, assault (corps or FASCOM)	C-7A	460			
12	One squadron			1.5	3.0	5.5

Table 7-33. Engineer CB Employment Utilization

	1	2
1	Battalion months of construction effort required	Optimum number of battalions best employed
2	25-35	4
3	15-24	3
4	5-14	2
5	Fewer than 5	1

from 6 to 12 months. Concrete floors of 102-millimeter thickness are provided for maintenance and supply and 51-millimeter thickness for other buildings.

(*b*) Standard 5 provides all-weather operational facilities for a period of more than 12 months. Concrete floors of 152-millimeter thickness are provided for hangars, 192-millimeter thickness for warehouse and cargo, and 51-millimeter thickness for other buildings.

(*c*) Both standards provide for takeoff, landing, servicing, fueling, and parking of fixed- and rotary-wing aircraft and for all accommodations in buildings.

(2) *Heliports.* Table 7-31 lists area requirements for helipads and heliports by various aircraft and type of facility.

(3) *USAF airfields.* Table 7-32 gives the average number of engineer CB-months required to accomplish emergency, minimum, and full operational construction of different types of bases. A factor of 75 percent of total construction of a new base can be used to estimate the average construction required to reconstruct an existing base or to use a site where an airfield of some type exists or has existed. The battalion-months in the table are not applicable to extreme climatic conditions and mountainous or swampy terrain. Critical aircraft (colm 2) are those aircraft that require the longest runway in each category.

(4) *Battalion-month estimates.* The number of engineer CB-months to construct the different types of bases is calculated from the man- and equipment-hour workload needed to build each base. This is determined by specifying for each type of base the kinds and numbers of facilities required for the performance of the function of the units supported by the base, i.e., Airways and Air Communications Service station, housing, and runway. Each of these facilities is broken down into the kinds and numbers of elements composing it, i.e., paved surfaces, shops, messhalls, and latrines. A man- and equipment-hour factor, such as 1.75 hours per square meter of paved surface, then is applied to each of these elements to compute the total man-hours required to construct each element. The number of hours for all elements are added to give the total man- and equipment-hours required to construct the base. This total is converted to CB-months by using the factor 125,000 man- and equipment-hours of construction effort as equivalent to 1 engineer CB-month.

b. Conversion of Battalion-Months of Effort to Engineer CB. To compute manning, training, and equipping requirements, it is necessary to convert engineer CB-months, as given above, to the number of CB required. Thus, a construction task requiring 8 engineer CB-months can be accomplished by one engineer CB working for 8 months, two CB working for 4 months, or four CB work-

Table 7-34. Estimated Time Required for Linework Operations

1	1 Operation	2 Man-hours placing	3 Man-hours removing
	Laying out and staking line open wire:		
2	150-m span—km	5.50	----------
	Material distribution:		
3	Lightweight metal poles—each	0.30	----------
4	Round wooden poles—each	0.50	----------
5	Wire and accessory materials, 150-m span—4 pr—km	2.30	----------
6	Insulated wire and accessory materials—150-m span—km	1.30	----------
7	PVC cable and accessory materials—per reel	1.80	----------
	Holes—pole:		
8	Dug by hand—per hole	2.00	----------
9	Dug by machine—per hole	0.50	----------
10	Dug by blasting, hand drilling—per hole	5.00	----------
	Holes—anchor:		
11	Dug by hand—4 by 4 log—each	3.00	----------
12	Dug by machine—log or plank—each	0.70	----------
13	Dug by machine—patent—each	0.80	----------
14	Dug by hand—5/8-in. rock—each	3.00	----------
	Assembling hardware and placing crossarm—open wire:		
15	Lightweight metal—four pins—each	0.30	0 20
16	Round wooden poles—eight pins—each	0.50	0.20
	Setting poles (erecting, backfilling, and tamping):		
17	Lightweight metal—each	0.40	0.30
18	20-ft round—each	1.50	1.00
19	30-ft round—each	2.00	1.20
	Guying:		
	Placing anchor and backfilling:		
20	Lightweight metal poles—each	0.60	----------
21	Round pole log or plank—each	1.80	----------
22	Patent—each	1.00	----------
	Placing and tensioning guying:		
23	W-145, 109 GS, or similar—each	0.80	0.40
24	Wire messenger, 2.2M—each	1.50	0.40
25	Wire messenger, 6M or 10M—each	1.50	0.80
	Installing line wire (placing, sagging, and tying in):		
26	One pr—km	15.50	8.10
27	Four pr—km	25.00	11.20
	Placing PVF-covered cable on messenger:		
28	11 to 101 pr—km	78.00	50.00
29	More than 101 pr—km	102.00	72.00
30	Placing insulated wire on existing pole line—km	7.40	4.40
	Ground surface construction:		
31	Spiral-4—km	1.60	1.60
32	Wire, WD-1TT, or similar—km	0.95	0.62
	Buried construction (using cable plow, LC-236( )/MT):		
	Spiral-4:		
33	One cable—km	5.30	1.90
34	Two cables, same trench—km	6.20	2.50
35	Jute-covered, tape—armored—km	28.10	42.00
36	Constructing overhead crossing for insulated wire—each	5.20	----------

ing for 2 months. In emergencies, immediate and urgent requirements may develop for the construction of complex installations. e.g., a heavy bomber base. Theoretically, this could be done by concentrating enough CB in the area to perform the required number of months of construction. However, an oversaturation effect is involved, in which the efficiency of the work diminishes as the personnel, equipment, and supplies of the different CB create interference. On the basis of these saturation considerations, table 7-33 presents estimates of the number of engineer CB that can be used most efficiently.

Table 7-35. Characteristics of Round Telephone Poles (American Standard)

1	Class	1	2	3	4	5	6	7
2	Minimum top circumference (in)	27	25	23	21	19	17	15
3	Transverse breaking loads (lb)	4,500	3,700	3,000	2,400	1,900	1,500	1,200

	Type	Length (ft)	Approximate average weight (lb)					
4	Western cedar	20	700	600	500	400	300	225	200
5	Northern cedar	20	720	600	540	350	300	230	190
6	Creosoted pine	20	635	555	479	418	353	310	259
7	Western cedar	25	850	720	600	480	400	320	250
8	Northern cedar	25	1,020	780	600	515	420	300	250
9	Creosoted pine	25	898	808	686	602	508	423	362
10	Western cedar	30	1,000	850	730	610	500	420	350
11	Northern cedar	30	1,320	1,170	870	630	520	420	350
12	Creosoted pine	30	1,241	1,076	921	780	672	573	489
13	Western cedar	35	1,200	1,000	850	750	650	560	470
14	Northern cedar	35	1,620	1,380	1,060	820	720	510	450
15	Creosoted pine	35	1,603	1,410	1,213	996	865	733	616

7–16. Signal Construction Factors

a. Estimated Time Required for Linework Operations. The time factors listed in table 7–34 are maximum for any operation. However, buried construction does not cover operations in jungle, arctic, or desert areas. In ground surface construction operations (lines 31 and 32), add 7.4 man-hours per kilometer for spiral-4 and 3.7 man-hours per kilometer for wire, WD–1TT, to cover surveying, staking line, testing sections, and policing.

b. Characteristics of Round Telephone Poles. In table 7–35, the northern and western cedars indicated are butt treated; pine is treated full length. (Requirements at 6 feet from the butt are not shown.) An estimate of the shipping space required for poles is—

$$\frac{\text{Average weight (lb)} \times \text{constant}}{40} = \text{measurement tons}$$

Values of the constant are—
Cedars = 0.052
Pine = 0.026

c. Telephone Operational Data. Telephone operational data are included in (1) through (4) below. Space requirements are included in table 7–36.

(1) *Commercial-type telephone switchboard capacity—position comparison.*

Toll switchboard capacity—lines	*Positions*
100	15
200	25
300	34
400	40

(2) *Local (common battery manual) call handling time and traffic distribution.*

(*a*) *Call handling time.*

One operator handles 150 calls per operator-hours
Two operators handle 200 calls per operator-hour
Four operators handle 225 calls per operator-hour
Five operators handle 230 calls per operator-hour

(*b*) *Distribution of traffic (average situation).*

	Percentage
Local calls	40
Outgoing trunk calls	30
Incoming trunk calls	30

(3) *Toll (common battery manual) call handling time and traffic distribution.*

(*a*) *Call handling time.*

One operator handles 20 calls per operator-hour
Two operators handle 25 calls per operator-hour
Three operators handle 30 calls per operator-hour
Four operators handle 35 calls per operator-hour
Five operators handle 40 calls per operator-hour

(*b*) *Distribution of traffic (average situation).*

	Percentage
Outward	55
Inward	30
Through (switchboard)	15

(4) *Normal telephone instrument requirements (combat units).*

(*a*) One per general officer.

(*b*) One per two field grade officers.

(*c*) One per four company grade officers.

(*d*) One per 50 or 100 enlistsd men, depending on whether troop basis is TOE or personnel are operating as part of a large headquarters staff.

(*e*) One per 50 or 100 square feet of office space.

Table 7-36. Space Requirements—Communication Facilities

a. Common Battery Manual Telephone Switchboard (Fixed Plant)

1	1 Line capacity	2 Switchboard positions	3 Space requirements (sq m)
2	100	1	42
3	100	2	49
4	200	2	55
5	200	4	70
6	400	7	130
7	600	10	160
8	800	11	172
9	1,000	14	195
10	1,200	16	212
11	1,600	22	294
12	2,000	27	294
13	2,800	40	396
14	3,600	60	498

b. Dial Central Office

1	1 Line capacity		2 Approximate space requirements	
	Initial	Expandable to—	Dimensions (m)	Area (sq m)
2	200	400	9.2 by 16.7	153
3	400	600	9.7 by 16.7	193
4	600	1,000	10.7 by 21.3	228
5	1,000	1,400	10.7 by 25.0	266
6	1,400	2,000	12.2 by 29.0	353
7	2,000	3,000	13.7 by 33.5	460
8	3,000	4,800	14.9 by 36.3	540

c. Fixed Communications Center

1	1 Size	2 Space requirements (sq m)
2	Small	88
3	Medium	177
4	Large	280

d. Fixed Radio Transmitter Station

1	1 Size	2 Number of transmitters	3 Space requirements (sq m)
2	Small	Up to 7	Up to 280.
3	Medium	8 to 17	280 to 1,200.
4	Large	More than 18	1,200 and up.

e. Fixed Radio Receiver Station

1	1 Size	2 Number of receivers	3 Space requirements (sq m)
2	Small	Up to 15	Up to 370.
3	Medium	16 to 45	370 to 740.
4	Large	More than 46	740 and up.

f. Antenna Field *

1	1 Type	2 Space requirements (M sq m)
	Transmitter:	
2	Small (5 to 7 antennas)	60 to 100.
3	Medium (15 antennas)	180 to 300.
4	Large (25 to 35 antennas)	400 to 1,600.
	Receiver:	
5	Small (8 antennas)	140 to 200.
6	Medium (25 to 30 antennas)	800 to 1,200.
7	Large (50 to 60 antennas)	1,800 to 2,400.

*Space is based on average conditions existing. However, space requirements may vary, depending on type of antennas, equipment used, location, and terrain.

Section III. OTHER COMBAT SERVICE SUPPORT

7-17. General

a. Water purification is part of the general support of the army engineer combat brigade through the engineer combat battalion (TOE 5-35). Where water sources are available, the engineer combat battalion can purify up to 120,000 gallons of water per day.

b. The army engineer combat brigade will decide the establishment of any temporary installation for the support of engineer construction efforts.

c. Engineer cellular units (TOE 5-500-series) provide utilities, fire protection, and real estate support.

Table 7-37. Water Requirements

1	1 Unit consumer	2 Conditions of use	3 Gallons per unit consumer per day: Temperate/cold climate	4 Gallons per unit consumer per day: Desert/jungle	5 Remarks
2	Man	In combat:			
		Minimum	1/2–1	2–3	For eating and drinking only; periods not to exceed 3 days.
			2	3–4	When field rations are used.
		Normal	3	6	Drinking plus small amount for cooking or personal hygiene.
		March or bivouac	2	5	Minimum for all purposes.
		Temporary camp	5	------	Desirable for all purposes (does not include bathing).
		Temporary camp with bathing facilities	15	------	Includes allowance for waterborne sewerage system.
		Semipermanent camp	30–60	------	----------
		Permanent camp	60–100	------	----------
3	Vehicle	Level and rolling country	1/8–1/2	------	Depending on size of vehicle.
		Mountainous country	1/4–1	------	Depending on size of vehicle.
4	Locomotive	Standard military	Variable	------	95 gallons per train-kilometer.
		Commercial	Variable	------	125 gallons per train-kilometer.
5	Hospital	Standard 2	50 per bed	------	Includes water for medical personnel; sewage not waterborne.
		Standards 3, 4, 6	85 per bed	------	Includes water for medical personnel and for waterborne sewage.
6	Impregnating plant, clothing	Maximum impregnating capacity	2,400	------	Aqueous process. Includes 2,000 gallons for washing and cleaning purposes.
7	Bakery section	Two 10-hour shifts	1,400	------	Water for making bread and cleaning baking utensils.
8	Laundry unit	Two 10-hour shifts	4,000	----------	
9	Shower unit		9,800	----------	
10	Decontaminating apparatus, 400-gallon, truck-mounted	Decontamination	4,000	------	Water obtained from natural source when available.
11	Chemical base laboratory, M2	Normal laboratory work	300	----------	

7–18. Water Supply

Tables 7–37 through 7–40 provide data on water requirements in the field army and the equipment used to meet these requirements.

7–19. Printing Rates

Table 7–41 provides printing rates.

7–20. Training Areas and Facilities

a. Corps Training Area Requirements. A maneuver area of approximately 4 million acres is required for a corps field training exercise involving three divisions and a normal corps slice of combat, combat support, and combat service support units. An impact area of 15,000 acres should be available in or adjacent to the maneuver area to accommodate live-firing exercises.

b. Division Training Area Requirements. Current doctrine on the employment of divisions in both nuclear and nonnuclear warfare increases the requirements for training areas in size and for variety in types of terrain, cover, and concealment. The increased versatility and range of infantry, armor, and artillery weapons; the increased use of aircraft for the mobility of divisional units; and the requirements for greater dispersion of units in a tactical area have outmoded previous concepts of both field exercise areas and firing and impact areas. Consequently, installations that have been used previously for the training of divisions are no longer capable of meeting present-day requirements.

Table 7–38. Water Equipment Issued to Engineer Units

1	Unit	TOE	Number of sets [1]	Type of purification unit (fresh water) (gph)	Generator (kw)	Equipment in each set		Pump discharge (gpm per set) [2]		Total storage capacity (gal)	Maximum production (gph)	Water transport equip
						Tank		Distribution	Purification			
						Number	Capacity (gal)					
1	1	2	3	4	5	6	7	8	9	10	11	12
2	Engr bn, abn div	5–25G	5	600	3	2	1,000	65	10	5,000	3,000	
3	Engr cbt bn, army or corps	5–35G	5	1,600	10	2	6,000	125	25	30,000	7,500	
4	Engr WS co	5–67G	9	3,000 (mbl)	10	2	6,000	125	50	54,000	27,000	12 1,000-gal tk trk.
5	Engr co, sep inf bde	5–107G	2	1,500	10	2	6,000	125	25	12,000	3,000	1 400-gal tk tlr.
6	Engr CB	5–115G	2	1,500	10	2	6,000	125	25	12,000	3,000	
7	Engr co, sep armd or inf (mech) bde	5–127G	2	1,500	10	2	6,000	125	25	12,000	3,000	
8	Engr co, sep abn bde	5–137G	1	600	3	2	1,000	65	10	1,000	600	
9	Engr bn, armd and inf (mech) div	5–145H	5	1,500	10	2	6,000	125	25	30,000	7,500	
10	Engr bn, inf div	5–155H	5	1,500	10	2	6,000	125	25	30,000	7,500	
11	Engr cbt bn, abn	5–195G	3	600 (mbl)							1,800	
12	Engr co, sep lt inf bde	5–207G	2	1,500 (mbl)							3,000	
13	Engr bn, ambl div	5–215T	5	500 (mbl)							2,500	
14	Well-drilling tm, abn (GF)	5–520G	1	Well-drilling set								
15	Water purification tm (GG)	5–520G	1	3,000 (base)	10	3	3,000	125	50	9,000	3,000	
16	Water purification tm (GH)	5–520G	3	3,000 (base)	10	12	3,000	125	50	3,000	12,000	
17	Water trans tm (GJ)	5–520G										5 1,000-gal tk trk.
18	Water distillation tm (GI)	5–520G	1	6,000							6,000	

[1] Each set can equip one water point.
[2] One pump at steady purification rate; others at full-rated capacity for distribution (intermittent operation).

Table 7–39. Water Distribution Equipment

	1	2	3
1	LIN	Equipment	Capacity
	S73120	Stlr, tk, water, 2-wheel:	
2	--------	With 2-1/2-ton trk-trac	2,000 gal
3	--------	With unit ki	5-gal cans, wt 50 lb (filled)
4	S73257	Stlr, tk, potable water, 4-wheel, forced-disch	5,000 gal
5	W95811	Tlr, cgo, 1-1/2-ton, 2-wheel	60 cans filled
6	W98962	Tlr, tk, water, 2-wheel	400 gal
7	X40009	Trk, cgo, 2-1/2-ton, 6×6	100 cans filled
8	X58367	Trk, tk, water, 2-1/2-ton, 6×6	1,000 gal

Table 7–40. Capacities of Other Water Supply Equipment

	1	2	3
1	LIN	Equipment	Capacity
2	G58426	Drill, mach, well, rot	4-7/8-in.-diam well at 600 ft.
3	G58563	Drill, mach, percussion	6-in-diam well at 1,000 ft.
4	G58597	Drill, mach, well	5-7/8-in.-diam well at 1,500 ft.
5	P91756	Pump, cntrf, 1-1/2-in. suction and disch	65 gpm at 50-ft head.
6	P92167	Pump, cntrf, 2-in. suction and disch	170 gpm at 50-ft head.
7	P92578	Pump, cntrf, 3-in. suction and disch	240 gpm at 60-ft head.
8	P92989	Pump, cntrf, 4-in. suction and disch	200 gpm at 300-ft head.
9	P93400	Pump, cntrf, 6-in. suction and disch	500 gpm at 555-ft head; 1,400 gpm at 275-ft head.
10	P96503	Pumping assy, deep-well	50 gpm against 250-ft head.
11	P96914	Pumping assy, 4-in	200 gpm against 200-ft head.

Table 7–41. Printing Rates

	1	2	3
1	Duplicating method	Number of copies	Copies per minute
2	Stencil	10,000	90–180
3	Multigraph	Unlimited	100
4	Multilith (paper master)	300–1,000	100
5	Multilith (metal master)	10,000	100
6	Photo-offset	Unlimited	150
7	Heavy press	Unlimited	600

(1) *Division cantonment areas.* The division cantonment area should be near the perimeter of the land available and accessible to highways and railroad facilities. The area should provide all housing, shortage, railroad yards, administration facilities, shops, close-in training areas, miscellaneous training courses, a landing field, station hospital, division review field of at least 220 by 1,400 meters, and recreational facilities. For a functional layout of division camps, see drawing numbers E–16–06–21 and E–16–06–22, obtainable from Office, Chief of Engineers. See also appropriate AR series.

(2) *Division field exercise area.* The field exercise area includes all available land except that used for cantonment, miscellaneous activities, and the firing and impact area. Portions of the firing and impact area not in use during the exercises may serve as a field exercise area. This area should contain streams or lakes for training in construction of fixed and floating bridges. Landing strips for organic aircraft should be at several places in the field exercise area. The area for an airborne division should contain several cleared areas suitable for use as drop zones and landing zones and should be within 1 day's march of an airfield suitable for use by USAF aircraft.

(3) *Division firing and impact area.* The firing and impact area should permit firing all ranges simultaneously. A suggested layout is in AR 210–21. AR 385–63 lists safety requirements. This area should be of varied terrain, with suitable locations for ground observation points. The impact area may be submarginal or swampland.

c. Average Installation Area Requirements. The subparagraphs below are pertinent to the data included in table 7–42, which lists the average installation area requirements for various types of units.

Table 7-42. Data on Installation Areas in Approximate Acreages

1	1 Type of unit	2 Approximate number of troops	3 Cantonment area (acres)	4 Miscellaneous activities area (acres)	5 Field exercise area (acres)	6 Firing and impact area (acres)	7 Total (acres)
2	Inf div	30,000	2,200	1,000	50,000	140,000	193,200
3	Inf div (mech)	30,000	2,200	1,000	70,000	140,000	213,200
4	Armd div	30,000	2,200	1,000	70,000	140,000	213,200
5	Abn div	30,000	2,200	1,000	50,000	90,000	143,200
6	Corps trps	30,000	2,400	1,000	10,000	40,000	53,400
7	ADA firing cen	2,500	250	150	6,000	70,000	76,400
8	Tk firing cen	2,500	250	150	Not required	140,000	140,400

(1) Division strengths include nondivisional and supporting troops, i.e., aggregate strength. Corps strength includes corps troops plus one-third of normal field army engineer and field army air defense artillery units.

(2) Air defense artillery firing center troops, cantonment, and miscellaneous activities support three automatic weapon battalions. These three battalions require position areas and danger areas for simultaneous firing through a 45-degree safety angle. However, the danger area may be sited over water. AR 385-62 lists range safety requirements for missiles and AR 385-63 lists requirements for guns.

(3) Tank firing center troops, cantonment and miscellaneous activities support three tank battalions and proportionate station overhead.

d. Area Factors—Nondivisional Units. Site area factors for troop camps, administration facilities, hospitals, prisoner of war camps, unclassified storage, and miscellaneous buildings are listed in table 7-24.

7-21. Base Development

a. Definition. Base development is the acquisition, development, and expansion or rehabilitation of the facilities and resources of an area or location for the support of forces employed in military operations or deployed in accordance with strategic plans.

b. Phases of Base Development.

(1) *Planning phase.* Because of the long lead-time needed to assemble men and materiel, planning for base development must be begun as early as possible to support any operation. Guidance for base development planning is contained in the base development study and the base development planning directive and culminates in the base development plan. During this phase, the requirements for personnel and materiel are developed and submitted to appropriate agencies.

(2) *Execution phase.* The execution phase begins with the coordinated arrival of personnel and materiel in the objective area. Construction begins during this phase. Changes in tactical operation plans or the mission, or the receipt of new information on existing facilities and resources, can change priorities, standards of construction, and facilities to be constructed. All changes to the plan must be made rapidly and forwarded to the field to insure efficient use of men and materiel.

7-22. Base Development Planning

a. General. FM 31-82 provides information on base development planning, including responsibilities, planning considerations, the planning directive, elements of base development plans, and a sample format for a base development plan.

b. Logistic Data for Base Development. Data throughout this manual apply to the execution phase of base development and to site and area factors. Data pertaining to major base development tasks are as follows:

(1) Storage—paragraphs 5-28 through 5-37.

(2) Hospital bed requirements—paragraphs 4-21 through 4-23.

(3) Transportation—chapter 6.

(4) Construction—paragraphs 7-7 through 7-16.

(5) Communications—paragraphs 3-1 through 3-8.

APPENDIX A

REFERENCES

A-1. Army Regulations

AR 10-7	United States Continental Army Command.
AR 11-8	Principles, Objectives, and Policies of the Army Logistic System.
(S) AR 11-11	Major Command Stockage Levels Worldwide (U).
AR 115-11	Army Topography.
AR 210-21	Training Areas and Facilities for Ground Troops.
AR 220-10	Preparation for Oversea Movement of Units (POM).
AR 230-1	Nonappropriated Funds and Related Activities.
AR 310-25	Dictionary of United States Army Terms (Short Title: AD)
AR 310-50	Authorized Abbreviations and Brevity Codes.
AR 385-62	Firing Guided Missiles and Heavy Rockets for Training, Target Practice and Combat.
AR 385-63	Regulations for Firing Ammunition for Training, Target Practice, and Combat.
AR 385-80	Nuclear Reactor, Health and Safety Program.
AR 570-2	Organization and Equipment Authorization Tables—Personnel.
AR 611-101	Manual of Commissioned Officer Military Occupational Specialties.
AR 611-201	Enlisted Military Occupational Specialties.
	Materiel Management Responsibilities—Federal Supply Classification (FSC) Assignments.
AR 708-1	Cataloging and Supply Management Data.
AR 710-2	Materiel Management for Using Units, Support Units, and Installations.
AR 725-50	Requisitioning, Receipt, and Issue System.
AR 750-1	Maintenance Concepts.

A-2. Department of the Army Pamphlets

DA Pam 310-series	Military Publications Indexes.

A-3. Field Manuals

FM 5-1	Engineer Troop Organizations and Operations.
FM 5-15	Field Fortifications.
FM 5-25	Explosives and Demolitions.
FM 5-34	Engineer Field Data.
FM 5-36	Route Reconnaissance and Classification.
FM 5-144	Engineer Amphibious Units.
FM 6-61	Field Artillery Battalion, Honest John.
FM 8-55	Army Medical Service Planning Guide.
FM 9-6	Ammunition Service in the Theater of Operations.
FM 9-14	Explosive Ordnance Disposal Service.
FM 10-13	Supply and Service Reference Data.
FM 10-60	Supply of Subsistence in a Theater of Operations.
FM 11-23	U.S. Army Strategic Communications Command (Theater).
FM 12-2	Adjutant General Support in Theaters of Operations.
FM 14-3	Comptroller Support in Theaters of Operations.
FM 16-5	The Chaplain.

FM 20–15	Pole and Frame Supported Tents.
FM 20–16	Air-Supported Tentage.
FM 20–32	Landmine Warfare.
FM 20–32A	Landmine Warfare (Scatterable Mines).
FM 24–16	Signal Orders, Records, and Reports.
FM 24–19	Communications-Electronics Reference Data.
FM 29–6	The Personnel Command.
FM 30–5	Combat Intelligence.
FM 30–9	Military Intelligence Battalion, Field Army.
FM 31–21	Special Forces Operations—U.S. Army Doctrine.
(S) FM 31–21A	Special Forces Operations—U.S. Army Doctrine (U).
FM 31–22	U.S. Army Counterinsurgency Forces.
FM 31–60	River-Crossing Operations.
FM 31–82	Base Development.
FM 41–10	Civil Affairs Operations.
FM 44–1–1	U.S. Army Air Defense Artillery Operations.
FM 54–3	The Field Army Support Command.
FM 54–4	The Support Brigade.
FM 54–7	The Theater Army Support Command.
FM 54–8	The Administrative Support Theater Army (TASTA–70).
FM 55–15	Transportation Reference Data.
FM 55–20	Army Rail Transport Operations.
FM 55–30	Army Motor Transport Operations.
FM 55–57	Transportation Harbor Craft Units and Marine Maintenance Units.
FM 55–58	Transportation Boat Operations.
FM 55–60	Army Terminal Operations.
FM 60–30	Embarkation and Loading—Amphibious.
FM 61–100	The Division.
FM 100–5	Operations of Army Forces in the Field.
FM 100–10	Combat Service Support.
FM 100–15	Larger Units, Theater Army—Corps.
FM 100–27	U.S. Army/U.S. Air Force Doctrine for Tactical Airlift Operations.
FM 101–5	Staff Officers' Field Manual: Staff Organizational and Procedure.
FM 101–10–2	Staff Officers' Field Manual: Organizational, Technical, and Logistical Data—Extracts of Nondivisional Tables of Organization and Equipment.
(S) FM 101–10–3	Staff Officers' Field Manual: Organizational, Technical, and Logistical Data—Classified Data (U).
(C) FM 101–20	United States Army Aviation Planning Manual (U).
(S) FM 101–31–2	Staff Officers' Field Manual: Nuclear Weapons Employment Effects Data (U).

A–4. Supply Bulletins

SB 1–1	Army Aircraft Flying Hour Factors and Forecast.
SB 3–39	Basic Loads of Chemical Nontoxic Ammunition.
SB 10–495	Standard "B" Ration for the Armed Forces.
(C) SB 38–26	Ammunition Supply Rates (U).
SB 700–20	Army Adopted/Other Selected Items and List of Reportable Items.
SB 700–50	Expendable Items (Except Medical, Class V, Repair Parts, and Heraldic Items).
SB 710–2	Supply Control—Combat Consumption Rates for Ground and Aviation Type Petroleum Products.

A–5. Technical Bulletins

TB 55–46–1	Standard Characteristics (Dimensions, Weight, and Cube) for Transportability of Military Vehicles and Other Outsize/Overweight Equipment.

A–6. Technical Manuals

TM 3–220	Chemical, Biological and Radiological (CBR) Decontamination.
TM 5–236–(CY)	Army Ephemeris and Nautical Almanac, Year ____.
TM 5–301	Engineer Functional Components System Staff Tables of Installations, Facilities, and Equipages.
TM 5–302	Construction in the Theater of Operations.
TM 5–312	Military Fixed Bridges.
TM 5–330	Planning and Design of Roads, Airbases, and Heliports in the Theater of Operations.
TM 5–343	Military Petroleum Pipeline System.
TM 5–373	Through Truss Railway Bridges.
TM 5–374	Light Standard and Standard Unit Steel Trestles.
TM 9–500	Data Sheets for Ordnance Type Materiel.
TM 9–1300–206	Care, Handling, Preservation, and Destruction of Ammunition.
TM 10–1100-series	Petroleum Pipeline and Terminal Operating Procedures and Techniques (as appropriate).
TM 30–245	Image Interpretation Handbook.
TM 55–206	Railway Train Operations.
TM 55–450–15	Air Movement of Troops and Equipment (Administrative).
TM 743–200-series	Storage of Supplies and Equipment.

A–7. Miscellaneous Publications

CTA 50–922	Chaplain and Chapel Facilities.

APPENDIX B

SUPPLY DATA BASED ON WORLD WAR II

The data in this appendix represent World War II experience. They provide a picture of a large landmass army (or a portion of a large army in a specific theater) in a conventional conflict, under the supply system of five classes and the technical services. These data are reproduced from FM 101–10, August 1949.

Table B–1. European Theater [a]

1	Item	2 Lb per man per day	3 Tons per man per mo	4 Conversion factor STON to MTON [2]	5 MTON per man per mo	6 MTON per man per mo with 15-percent stowage factor
2	Cl I–rat	7.170	0.108	2.1	0 227	0.261
	Cl II:					
3	QM clo and equipage	0.426	0.006	2.0	0 012	0.014
4	QM gen sup	0.305	0.005	2.8	0.014	0.016
5	Ord gen sup	0.620	0.009	2.2	0.020	0.023
6	Engr	0.630	0.009	3.3	0.030	0.035
7	Ord	2.710	0.041	1.8	0 074	0.085
8	Cml (incl cl IV)	0.025	0.001	2.3	0.002	0.002
9	Sig (incl cl IV)	0.725	0.011	3.8	0 024	0.048
10	Med (incl cl IV)	0.300	0.005	2 5	0.013	0.015
11	Total cl II	5.740	0.087		0.207	0.238
	Cl III:					
12	Gas, oil, grease [3] (less AF)	11.400	0.171	1.5	0.257	0.296
13	AF fuel and lubs [4]	13.400	0 201	1.5	0.302	0.347
14	Subtotal [5]	24 800	0.372		0.559	0.643
15	Fuel for Temperate Zone	8 500	0 128	2.0	0 256	0.294
16	Total cl III	33.300	0.500		0.815	0.937
	Cl IV:					
17	Med (incl cl II)					
18	Ord mtr maint	0.510	0.008	1.0	0.008	0.009
19	QM sales items	2.000	0.030	1.7	0.051	0.059
20	AF sup and repl	2.840	0.043	4.0	0.172	0.198
21	Engr const mat	7.280	0.109	1.5	0.164	0.189
22	Sig (incl cl II)					
23	Cml	Negligible				
24	Trans	Negligible				
25	Total cl IV	12.600	0.190		0.395	0.455
	Cl V:					
26	Ammo (less AF)	3.640	0.055	0 9	0.050	0.058
27	AF ammo	4.410	0.066	0.9	0.059	0.068
28	Total cl V	8 050	0.121		0 109	0 126
29	Total European Theater	66.800	1.010		1.750	2.020

[1] Nongas conditions.

[2] Conversion factors are based on average cubage for each item. MTON (40 cu ft) of any one item can be found by multiplying its STON (2,000 lb) weight by that item's conversion factor.

[3] Consists of the following:
- 90 percent gasoline
- 4 percent diesel fuel
- 3 percent engine oil
- 1 percent gear lubricant
- 2 percent greases

[4] Cl IIIA.

[5] Assume 90 percent of quantities shown in this line is shipped by tanker and 10 percent is shipped in packaged containers as dry cargo.

Table B-2. Pacific Theater [1]

	1	2	3	4	5	6
1	Item	Lb per man per day	Tons per man per mo	Conversion factor STON to MTON [2]	MTON per man per mo	MTON per man per mo with 15-percent stowage factor
2	Cl I-rat	6.710	0.101	2.1	0.212	0.244
	Cl II:					
3	QM clo and equipage	1.000	0 015	2.0	0.030	0.035
4	QM gen sup	0.730	0.011	2.8	0.031	0.036
5	Ord veh repl	0.620	0.009	2.2	0.020	0 023
6	Engr	0.370	0.006	3.3	0.020	0.023
7	Ord	0.300	0.005	1.8	0.009	0.010
8	Cml (incl cl IV)	0.567	0.009	2.3	0 021	0.024
9	Sig (incl cl IV)	0.750	0.011	3.8	0.042	0.048
10	Med (incl cl I and IV)	0.330	0 005	2.5	0.013	0.015
11	Total cl II	4.670	0.071	----------	0.186	0.214
	Cl III:					
12	Gas, oil, grease [3] (less AF)	10.800	0 162	1.5	0.243	0.279
13	AF fuel and lubs [4]	11.080	0.166	1.5	0.249	0.286
14	Subtotal [5]	21.900	0.328	----------	0 492	0.565
15	Fuel for Temperate Zone	8.500	0.128	2.0	0.265	0.294
16	Total cl III	30.400	0.456	----------	0.748	0.859
	Cl IV:					
17	Med (incl in cl II)					
18	Ord mtr maint	0.180	0.003	1.0	0.003	0.003
19	QM sales items	1.970	0.030	1.7	0.051	0.059
20	AF sup and repl	2.840	0.043	4.0	0.172	0.198
21	Engr const mat	11.900	0.179	1.5	0.268	0.308
22	Sig (incl in cl II)					
23	Cml (incl in cl II)					
24	Trans	0.130	0.002	2.4	0.005	0.006
25	Total cl IV	17.000	0.257	----------	0 499	0.574
	Cl V:					
26	Ammo (less AF)	5 140	0 077	0.9	0.070	0.081
27	AF ammo	3.470	0 052	0.9	0.047	0.054
28	Total cl V	8.610	0.129	----------	0.117	0.135
29	Total Pacific Theater	67.400	1.010	----------	1.760	2.030

[1] Nongas conditions.

[2] Conversion factors are based on average cubage for each item. MTON (40 cu ft) of any one item can be found by multiplying its STON (2,000 lb) weight by that item's conversion factor.

[3] Consists of following:
- 63 percent gasoline
- 31 percent diesel fuel
- 3 percent engine oil
- 1 percent gear lubricant
- 2 percent greases

[4] Cl IIIA.

[5] Assume that 90 percent of quantity shown in this line is shipped by tanker and 10 percent is shipped in packaged containers as dry cargo.

Table B-3. Polar Regions [1]

1	1 Item	2 Lb per man per day	3 Tons per man per mo	4 Conversion factor STON to MTON [2]	5 MTON per man per mo	6 MTON per man per mo with 15-percent stowage factor
2	Cl I–rat	10.40	0.156	2.1	0.328	0.377
	Cl II:					
3	QM clo and equipage	0.85	0.013	2.9	0.038	0.044
4	QM gen sup	0.40	0.006	2.8	0.017	0.020
5	Ord veh repl	0.62	0.009	2.2	0.020	0.023
6	Engr	0.84	0.013	3.3	0.043	0.049
7	Ord	2.00	0.030	1.8	0.054	0.062
8	Cml (incl cl IV)	0.03	Negligible	2.3	0.001	0.001
9	Sig (incl cl IV)	0.66	0.010	3.8	0.038	0.044
10	Med (incl cl I and IV)	0.40	0.006	2.5	0.015	0.017
11	Total cl II	5.80	0.087	----------	0.226	0.260
	Cl III:					
12	Gas, oil, grease, compounds	9.00	0.135	1.5	0.203	0.233
13	AF fuel and lubs [3]	14.00	0.210	1.5	0.315	0.362
14	Fuel, solid	18.50	0.277	2.0	0.555	0.638
15	Total cl III	41.50	0.622	----------	1.073	1.233
	Cl IV:					
16	Med (incl in cl II)					
17	Ord mtr maint	0.50	0.008	1.0	0.008	0.009
18	QM sales items	2.00	0.030	1.7	0.051	0.059
19	AF sup and repl [4]	3.50	0.052	4.0	0.208	0.239
20	Engr const mat	12.00	0.180	1.5	0.270	0.310
21	Sig (incl in cl II)					
22	Cml (incl in cl II)					
23	Total cl IV	18.00	0.270	----------	0.537	0.618
	Cl V:					
24	Ammo	1.90	0.027	0.9	0.024	0.028
25	AF ammo [5]	3.50	0.052	0.9	0.047	0.054
26	Total cl V	5.30	0.079	----------	0.071	0.082
27	Total	81.00	1.220	----------	2.240	2.580

[1] Estimated, based on arctic test operations.

[2] Conversion factors are based on average cubage for each item. MTON (40 cu ft) of any one item can be found by multiplying its STON (2,000 lb) weight by that item's conversion factor.

[3] Cl IIIA.

[4] Cl IIA and IVA.

[5] Cl VA.

Table B-4. Combat Zone and Communications Zone

1	Item	2 Lb per man per day: Per Army man in CZ continental landmass [1]	3 Lb per man per day: Per Army man in CZ jungle [2]	4 Lb per man per day: Per Army man in COMMZ [3]
2	Cl I	7.690	5.950	8.80
	Cl II and IV:			
3	Air	0.023	0.016	Negligible
4	Cml	0.040	0.090	0.03
5	Engr	2.490	8.950	13.20
6	Med	0.112	0.560	1.11
7	Ord	4.950	0.860	3.00
8	QM	0.928	1.350	0.75
9	Sig	0.973	0.346	0.63
10	Trans	Negligible	Negligible	6.00
11	Total cl II and IV	9.520	12.200	24.70
12	Cl III	12.000	7.530	41.00
13	Cl V	13.400	8.680	1.40
14	Total	42.600	34.400	75.90

[1] Based on operations in Europe, all armies—24 Feb 45 to 28 Mar 45.
[2] Based on Sixth and Eighth Army operations—Dec 43 to Sep 44.
[3] Assumed from theater average—World War II.

Table B-5. Field Army and Corps in Combat

1	Item	2 STON per day: Per fld army [1]	3 STON per day: Per corps [2]
2	Cl I	1,420.000	346.0
	Cl II and IV:		
3	Air	0.133	Negligible
4	Cml	7.400	1.8
5	Engr	461.000	112.0
6	Med	20.700	5.0
7	Ord	916.000	223.0
8	QM	172.000	41.8
9	Sig	180.000	43.8
10	Total cl II and IV	1,760.000	427.0
11	Cl III	2,220.000	540.0
12	Cl V	2,480.000	603.0
13	Total	7,880.000	1,920.0

[1] Computed for fld army of 3 corps, each corps composed of 3 infantry and and 1 armored division, and including necessary supporting and service elements.
[2] Computed for corps of 3 infantry divisions and 1 armored division, with necessary supporting and service elements.
[3] Class V data applicable for periods of 14 or more days.

*Table B-6. Airborne Division in an Airborne Assault **

1	Item	2 Lb per man per day	3 STON per div per day
2	Cl I	6.60	46
	Cl II and IV:		
3	Cml	0.00	0
4	Engr	1.00	7
5	Med	0.42	3
6	Ord	0.00	----------
7	QM	0.00	----------
8	Sig	1.04	7
9	Total cl II and IV	2.46	17
10	Cl III	1.70	12
	Cl V:		
11	Cml	0.20	1
12	Ord	41.00	285
13	Total Cl V	41.20	286
14	Total	52.00	361

* Nongas conditions.

Table B–7. Armored Division [a]

1	Item	2	3	4	5	6	7	8	9
		Attack		Pursuit and exploitation		Defense		Reserve	
		Lb per man per day	STON per div per day	Lb per man per day	STON per div per day	Lb per man per day	STON per div per day	Lb per man per day	STON per div per day
2	Cl I	5.37	40	5.61	42	5.51	41	5.51	41
	Cl II and IV:								
3	Cml	0.25	2	0.25	2	0.25	2	0.25	2
4	Engr	0.70	5	0.54	4	0.42	3	0.21	2
5	Med	0.30	2	0.30	2	0.15	1	0.15	1
6	Ord	[b] 14.10	[b] 105	2.14	16	2.00	15	[c] 2.50	[c] 19
7	QM	2.11	16	2.11	16	2.11	16	[c] 3.25	[c] 17
8	Sig	0.87	7	0.85	6	0.37	3	0 37	3
9	Total cl II and IV	18.30	137	6.19	46	5.30	40	5.73	44
10	Cl III	13.80	103	23.30	174	7.51	56	5.83	44
11	Cl V	50.00	375	8.80	66	53.20	400	[d]	[d]
12	Total	87.50	655	43.90	328	71.50	535	17.30	129

[a] Nongas conditions.
[b] Primarily battle losses of combat vehicles.
[c] Increase over inactive situation due to intensified maintenance and replacement activities.
[d] All elements of division out of combat.

Table B-8. Infantry Division

*a. Infantry Division—Offensive Operations**

1	1 Item	2 Attack of fortified position: Lb per man per day	3 Attack of fortified position: STON per div per day	4 Attack of deliberately organized position: Lb per man per day	5 Attack of deliberately organized position: STON per div per day	6 Attack of hastily organized position: Lb per man per day	7 Attack of hastily organized position: STON per div per day	8 Pursuit: Lb per man per day	9 Pursuit: STON per div per day	10 Assault of hoatile shore: Lb per man per day	11 Assault of hoatile shore: STON per div per day
2	Cl I	5.720	51	5.370	48	5.460	48	5.610	50	6.190	55
	Cl II and IV:										
3	Cml	0.251	2	0.252	2	0.051	0.5	0.091	1	0.191	2
4	Engr	2.130	19	0.843	7	1.260	11.0	0.979	9	1.170	10
5	Med	0.301	3	0.301	3	0.125	1.0	0.111	1	0.221	2
6	Ord	1.670	15	1.670	15	2.830	25.0	2.080	18	0.769	7
7	QM	0.942	8	0.929	8	0.938	8.0	0.659	6	0.502	4
8	Sig	0.959	8	0.991	9	0.961	9.0	0.710	6	0.389	3
9	Total cl II and IV	6.250	55	4.980	44	6.160	55.0	4.630	41	3.240	28
10	Cl III	4.930	44	7.920	70	8.470	75.0	15.300	136	4.560	40
11	Cl V	47.800	430	44.400	400	42.800	386.0	7.700	69	43.300	390
12	Total	64.700	580	62.700	562	62.900	564.0	33.200	296	57.300	513

*Nongaa conditions.

b. Infantry Division—Defensive Operations [1]

1	Item	2	3	4	5	6	7	8	9
		Covering, security force, retirement or delaying action		Defense of position		Inactive situation		Reserve	
		Lb per man per day	STON per div per day	Lb per man per day	STON per div per day	Lb per man per day	STON per div per day	Lb per man per day	STON per div per day
2	Cl I	5.420	48	5.510	49	5.190	46	5.380	48
	Cl II and IV:								
3	Cml	0.361	3	0.361	3	0.251	2	0.251	2
4	Engr	0.811	7	1.460	13	0.501	4	0.159	1
5	Med	0.121	1	0.221	2	0.151	1	0.151	1
6	Ord	1.470	13	1.500	13	0.829	7	1.250	11
7	QM	1.320	12	1.100	10	2.110	19	2.110	19
8	Sig	0.721	6	0.989	9	0.479	5	0.479	4
9	Total cl II and IV	4.800	42	5.630	50	4.320	38	4.400	38
10	Cl III	12.500	111	6.830	61	6.410	57	2.230	20
11	Cl V	26.100	235	50.000	450	[2] 16.200	[2] 146	([2])	([2])
12	Total	48.800	436	70.000	610	32.100	287	12.000	106

[1] Nongas conditions.
[2] All elements out of combat.

APPENDIX C

MISCELLANEOUS DATA

Table C-1. Weight Conversion Factors

1	1 Unit	2 Long tons	3 Metric tons	4 Short tons	5 Kilograms	6 Pounds
2	1 long ton =		1.0160	1.1200	1,016.0	2,240.0000
3	1 metric ton =	0.9842		1.1023	1,000.0	2,204.6000
4	1 short ton =	0.8929	0.9072		907.2	2,000.0000
5	1 kilogram =					2,2046

Table C-2. Speed Conversion Factors

1	1 Unit	2 Knots	3 Statute miles per hour	4 Kilometers per hour	5 Feet per minute	6 Feet per second	7 Metera per minute	8 Meters per second
2	1 knot* =		1.1516	1.8532	101.34	1.6890	30.89	0.5148
3	1 mile per hour =	0.8684		1.6093	88.00	1.4667	26.82	0.4470
4	1 kilometer per hour =	0.5396	0.6214		54.68	0.9113	16.67	0.2278

*One knot—nautical mile per hour.

Table C-3. Power Conversion Factors

1	1 Unit	2 Kilowatts	3 Horsepower	4 BTU* per minute	5 Foot-pounds per second	6 Foot-pounds per minute
2	1 kilowatt =		1.34100	56.88	737.600	44,250.0
3	1 horsepower =	0.74570		42.42	550.000	33,000.0
4	1 BTU* per minute =	0.01758	0.02358		12.968	778.1

*BTU, or British thermal unit, is the quantity of heat required to raise the temperature of 1 pound of water 1° F.

Table C-4. Angular Measurement Conversion Factors

1	1 Unit	2 Radians	3 Degrees	4 Mils	5 Minutes
2	1 radian =		57.2958	1,018.600	
3	1 degree =	0 017453		17.778	60.000
4	1 mil =		0.05625		3.375

Note. 360° $= 2\pi$ radiana $= 6{,}400$ mila.

Table C-5. Linear Measurement Conversion Factors

1	Unit	2 Nautical miles*	3 Statute miles	4 Kilometers	5 Cable lengths	6 Fathoms	7 Meters	8 Yards	9 Feet	10 Inches	11 Centimeters
2	1 nautical mile =		1.1509	1.8519	8.439	1,012.7000	1,852.0000	2,025.4000	6,076.1150	72,913.0000	182,918.30
3	1 statute mile =	0.8681		1.6093	7.333	880.0000	1,609.3000	1,760.0000	5,280.0000	63,360.0000	160,933.00
4	1 kilometer =	0.5393	0.6214		4.557	546.8000	1,000.0000	1,093.6000	3,281.0000	39,370.0000	100,000.00
5	1 cable length =	0.1183	0.1364	0.2195		120.0000	219.5000	240.0000	720.0000	8,640.0000	21,945.00
6	1 fathom =						1.8290	2.0000	6.0000	72.0000	182.88
7	1 meter =					0.5468		1.0936	3.2810	39.3700	100.00
8	1 yard =					0.5000	0.9144		3.0000	36.0000	91.44
9	1 foot =					0.1667	0.3048	0.3333		12.0000	30.48
10	1 inch =								0.0833		2.54
11	1 centimeter =								0.0328	0.3937	

*The nautical mile is the same as the International Nautical Mile. In some texts, the nautical mile may appear as 6,080.2 feet.

Table C-6. Surface Measurement Conversion Factors

1	Unit	2 Square miles	3 Square kilometers	4 Hectares	5 Acres	6 Square rods	7 Square meters	8 Square yards	9 Square feet
2	1 square mile =		2.590	259.0000	640.000	102,400.0000	2,589,945.0000	3,097,600.0000	
3	1 square kilometer =	0.3861		100.0000	247.100	29,537.0000	1,000,000.0000	1,196,010.0000	
4	1 hectare =		0.010		2.471	395.40000	10,000.0000	11,960.0000	17,641.000
5	1 acre =			0.4047		160,00000	4,047.0000	4,840.0000	43,560.000
6	1 square rod =						25.2900	30 2500	272.250
7	1 square meter =					0.03954		1.1960	10.764
8	1 square yard =					0.03306	0.8361		9.000

Table C-7. Volume Measurement Conversion Factors

1	1 Unit	2 Cubic feet	3 Imperial gallons	4 U.S. gallons	5 Liters	6 Quarts
2	1 cubic foot =		6.2290	7.4810	28.320	29.9200
3	1 imperial gallon =	0.16054		1.2010	4.546	4.8040
4	1 U.S. gallon =	0.13368	0.8327		3.785	4.0000
5	1 liter =	0.03532	0.2201	0.2642		1.0567
6	1 measurement ton =	40.00000				
7	1 barrel (petroleum) =	5.61000		42.0000		

Table C-8. Speed of Sound Physical Constants

1	1 Unit	2	3	4 In air (at ° F.)	5	6	7 In water	8
		−10°	0°	30°	70°	100°	Fresh	Salt
2	Feet per second =	1,039	1,050	1,083	1,127	1,171	4,700	4,752
3	Miles per hour =	708	716	738	768	797	3,205	3,246
4	Centimeters per second =	31,669	32,004	32,932	34,350	35,692	143,256	144,840
5	Kilometers per hour =	1,139	1,152	1,188	1,236	1,283	5,158	5,224

Table C-9. Other Physical Constants

1	1 Constant	2 Unit of measure: Metric	3 Unit of measure: Nonmetric
2	Speed of light	229,330 km per sec	186,000 mi per sec
3	Acceleration due to gravity	981 cm per sec	32.2 ft per sec
4	Atmospheric pressure equal to theoretical maximum height of column of water, by suction.	10,366 kg per sq m 1,033 cm	14.7 lb per sq in 39.9 ft
5	Circumference of earth at Equator	40,075 km	24,902 mi
6	Time between moons	29 days, 12 hr, 44 min	

INDEX

	Paragraph	Page
Accumulation factors, hospitalization	4-17	4-13
Administrative loading	6-13*b*	6-17
Admission rates to hospitals	4-13	4-12
Aerial delivery provisions	6-43	6-66
Aerial port squadrons	6-42*c*	6-65
Aeronautical chart requirements	2-18*b*	2-36
Airborne division (*Also* includes separate airborne brigade.):		
Equipment summary	1-10	1-145
Fuel data	5-7*c*	5-17
Map requirements	2-18*b*	2-36
Movement:		
Air	2-13, 6-41*b*	2-29, 6-47
Motor	2-9—2-12	2-8—2-23
Rail	6-32	6-35
Water	2-14	2-29
Organization	1-10	1-145
Separate airborne brigade	1-16	1-305
Equipment summary	1-16	1-305
Organization	1-16	1-305
Training areas	7-20*b*	7-41
Troop requirements	2-4	2-3
Airborne special forces units	1-20, 1-21	1-325, 1-329
Aircraft:		
Airfield construction	7-15	7-35
Air Force transport in joint operations	6-45	6-71
Capacities	6-45*b*	6-71
Characteristics	6-45*b*	6-71
Fixed wing	6-44*c*	6-70
Fuel data	5-4	5-2
Landing facilities	6-44*b*	6-67
Loading and unloading times	6-44*b*	6-67
Movement	2-13, 6-41	2-29, 6-
Planning	2-13*e*	2-29
Rotary wing	6-44*b*	6-67
Air defense artillery map requirements	2-18*b*	2-36
Air Force:		
Airfield construction	7-15	7-35
Photographic units	2-26	2-35
Transport aircraft	6-41, 6-45	6-47, 6-71
Wing slice	2-8*c*	2-7
Airmobile division:		
Equipment summary	1-11	1-220
Fuel data	5-7*c*	5-17
Map requirements	2-18*b*	2-36
Movement:		
Air	2-13, 6-41*b*	2-29, 6-47
Motor	2-9—2-12	2-8—2-23
Airmobile division—Continued		
Movement—Continued		
Rail	6-32	6-35
Water	2-14	2-29
Organization	1-11	1-220
Training areas	7-20*b*	7-41
Troop requirements	2-5	2-4
Airphotography (*See also* Mapping and airphotography.)	2-16	2-35
Imagery interpretation	2-26	2-45
Reproduction	2-26	2-45
Requirements	2-25	2-43
Types and categories	2-24	2-42
Air terminals	6-42	6-65
Air wing slice	2-8	2-6
Ammunition (*See also* Supply, ten classes, class V.):		
Basic load data	5-18	5-76
Chemical	2-31	2-53
Combat vehicle data	5-14	5-33
Expenditures	5-15—5-17	5-38
Service	5-8, 5-10, 5-11	5-24, 5-32
Supply:		
Conventional	5-12	5-33
Levels	5-9	5-32
Special	5-13	5-33
Weight determination	5-18	5-76
Amphibious operations:		
Assault landing	2-14*b*	2-29
Beach capacity	6-6*a*	6-8
Troop requirements	2-6	2-5
Vessel and craft characteristics	6-6*a*	6-8
Armored division (*Also* includes separate armored brigade.):		
Equipment summary	1-9	1-14
Fuel data	5-7*c*	5-17
Map requirements	2-18*b*	2-36
Movement:		
Air	2-13, 6-41*b*	2-29, 6-47
Motor	2-9—2-12	2-8—2-23
Rail	6-32	6-35
Water	2-14	2-29
Organization	1-9	1-14
Separate armored brigade	1-13	1-297
Equipment summary	1-13	1-297
Organization	1-13	1-297
Training areas	7-20*b*	7-41
Troop requirements	2-2	2-3
Army (*See also* Field army.):		
Airlift in Air Force aircraft	6-41, 6-45	6-47, 6-71
Department of the Army	1-3	1-1
Field	1-6	1-4

	Paragraph	Page
Army—Continued		
Group	1–5	1–4
Theater	1–4	1–3
Artillery (*See* Air defense artillery *and* Field artillery.)		
Barbed-wire obstacles	3–12*b*	3–16
Base development	7–22	7–44
Basic load:		
Field artillery unit	5–18*b*	5–76
Guide	5–18*b*	5–76
Infantry unit	5–18*b*	5–76
Beaches:		
Assault landings	2–14*b*	2–29
Capacity	2–14*b*	2–29
Reefs	2–14*b*	2–29
Selection	2–14*b*	2–29
Surf	2–14*b*	2–29
Bed requirements, hospital:		
Basic data	4–21	4–15
Computations	4–22	4–16
Continental United States	4–23	4–17
Billets, construction	7–12*g*	7–30
Bivouac areas, construction	7–12*g*	7–30
Boats:		
Assault	3–11*b*	3–11
Fuel	5–4	5–2
Bridges	3–10, 3–11	3–8, 3–9
Chaplain planning factors	4–37	4–23
Chemical agent and munition characteristics	2–31	2–53
Civil affairs	2–32, 2–34—2–37	2–66, 2–66—2–68
Combat:		
Fuel data	5–7*c*	5–17
Tactical troop movements	2–9	2–8
Troop planning	2–1	2–1
Weapon characteristics	2–30	2–53
Combat service support:		
Maintenance	7–1—7–6	7–1—7–14
Movement planning	6–1	6–1
Personnel	4–1	4–1
Supply	5–1	5–1
Combat support:		
Base development	7–22	7–44
Engineer support	3–9—3–16	3–8—3–28
Fuel data	5–7*c*	5–17
Signal communications	3–1—3–8	3–1—3–8
Troop planning	2–1	2–1
Combat vehicle ammunition data	5–14	5–33
Commercial loading methods	6–12	6–17
Communications (*See also* Signal communications.):		
Basic data	3–1	3–1
Center	3–4	3–2
Characteristics of equipment	3–8	3–8
Field army system	3–3	3–2
Means	3–5	3–3
Special requirements	3–6	3–6
Users served	3–2	3–1

	Paragraph	Page
Construction:		
Administration facilities	7–12*c*	7–26
Airfields	7–15	7–35
Ammunition storage	7–12*e*	7–26
Bivouacs, camps, and billets	7–12*b*, *g*	7–26, 7–30
Bulk petroleum facilities	7–13	7–32
Depots	7–12*e*	7–26
Dredging	7–11	7–24
Engineer construction troops	7–7	7–18
Equipment fuel data	5–4	5–2
Floating pontoon wharves	7–10*f*	7–24
General	7–12	7–24
Hospitals	7–12*d*	7–26
Marginal lighterage wharves	7–10*e*	7–24
Nuclear powerplants	7–14	7–34
Prisoner of war camps	7–12*f*	7–30
Railway	7–9	7–21
Roads	7–8	7–19
Signal	7–16	7–39
Water terminals	7–10	7–23
Corps	1–7	1–5
Training areas	7–20*a*	7–41
Types of units	1–7*c*	1–5
Crime rates	4–33	4–21
Decorations	4–35	4–23
Demolitions	3–14	3–27
Department of the Army	1–3	1–1
Dimensions and weights, major end items	5–19, 5–20	5–88
Displaced persons	2–37	2–68
Division (*See also* Airborne, Airmobile, Armored, Infantry, *or* Mechanized division.):		
Area factors	7–20*b*	7–41
Slice	2–7, 2–8	2–5, 2–6
Dredging	7–11	7–24
Enemy civilian internees	4–32	4–21
Engineer(s):		
Airfield construction	7–15	7–35
Amphibious units	1–18, 1–19	1–318
Battalion-month, construction troops	7–7*a*	7–18
Fuel data	5–4	5–2
Mapping responsibility	2–20*b*	2–39
Support	3–9—3–16	3–8—3–28
Water supply	7–18	7–41
Equipment summary:		
Airborne division	1–10	1–145
Airborne special forces group	1–21*c*	1–330
Airmobile division	1–11	1–220
Armored division	1–9	1–14
Engineer amphibious units	1–19*d*	1–318
Infantry division	1–9	1–14
Mechanized	1–9	1–14
Separate airborne brigade	1–16	1–305
Separate armored brigade	1–13	1–297
Separate infantry brigade	1–14	1–299
Light	1–17	1–316
Mechanized	1–15	1–305
Evacuation and hospitalization	4–12—4–27	4–12—4–19
Accumulation factors	4–17	4–13

	Paragraph	Page
Evacuation and hospitalization—Continued		
Admission rates	4–13	4–12
Classification of patients	4–12	4–12
Dispersion factor	4–19	4–15
Disposition factors	4–20	4–15
Fixed-bed requirements	4–21—4–23	4–15—4–17
Hospital construction estimates	7–12*d*	7–26
Medical units	4–27	4–19
Sick/disease and nonbattle accident/injuries	4–14	4–12
Statistics	4–16	4–13
Transportation capacity	4–25	4–18
Wounded or injured in action	4–15	4–12
Evacuees	2–37	2–68
Field army	1–6	1–4
Airlift requirements	6–41*b*	6–47
Communication system	3–3	3–2
Fuel requirements	5–7	5–17
Troop requirements	2–2	2–3
Types of units	1–6*c*	1–4
Field artillery:		
Basic load	5–18	5–76
Fuel data	5–7*c*	5–17
Field engineering:		
Barbed-wire obstacles	3–12*b*	3–16
Fortifications	3–12	3–16
Finance support	4–3, 4–5	4–2, 4–4
Floating aircraft maintenance facility	7–6	7–14
Ford trafficability	3–15	3–28
Fuel (*See* Supply, ten classes, class III.)		
Greenwich mean time	2–27*c*	2–46
Halts (motor march)	2–9*d*	2–8
Headquarters:		
Corps	1–7	1–5
Field army	1–6	1–4
Aircraft requirements	6–41*b*	6–47
Support command	1–6*b*	1–4
Troop requirements	2–2	2–3
Helicopter (*See* Rotary-wing aircraft.)		
Hospitalization (*See* Evacuation and hospitalization.)		
Ice, load-bearing capacity	3–16	3–28
Infantry division (*Also* includes separate infantry brigade and separate light infantry brigade.):		
Equipment summary	1–9	1–14
Fuel data	5–7*c*	5–17
Map requirements	2–18*b*	2–36
Movement:		
Air	2–13, 6–41*b*	2–29, 6–47
Motor	2–9—2–12	2–8—2–23
Rail	6–32	6–35
Water	2–14	2–29
Organization	1–9	1–14
Separate infantry brigade	1–14	1–299
Equipment summary	1–14	1–299
Organization	1–14	1–299

	Paragraph	Page
Infantry division—Continued		
Separate light infantry brigade	1–17	1–316
Equipment summary	1–17	1–316
Organization	1–17	1–316
Training areas	7–20*b*	7–41
Troop requirements	2–2	2–3
Inland:		
Terminals	6–7	6–9
Waterway:		
Capacity	6–9	6–15
Characteristics	6–8	6–14
Intelligence	2–15	2–35
Airphotographic imagery	2–24	2–42
Natural phenomena	2–28	2–49
Reproduction and interpretation	2–26	2–45
Time and dates	2–27	2–45
Legal services	4–38	4–23
Line of communication buildup capacity	5–41	5–143
Loading:		
Administrative	6–13*b*	6–17
Bulk and general	6–12*a*	6–17
Cargo ships	6–14*c*	6–17
Combat	6–13*a*	6–17
Commercial	6–12	6–17
Commodity	6–13*c*	6–17
Selective	6–13*d*	6–17
Losses and replacements	4–6—4–11	4–4—4–11
Categories of losses	4–6*a*	4–4
Combat zone estimates	4–9	4–5
Communications zone estimates	4–10	4–10
Experience, loss	4–6*d*	4–4
Gross losses	4–6*b*	4–4
Net losses	4–6*c*	4–4
Nuclear loss estimates	4–7	4–5
Unit replacements	4–8	4–5
Theater estimates, nonnuclear	4–11	4–11
Mail	4–36	4–23
Maintenance:		
Control	7–2	7–2
Direct support	7–1*c*	7–1
Facilities and utilities	7–4	7–11
Field army	7–1*e*	7–2
Floating aircraft facility	7–6	7–14
General support	7–1*d*	7–1
Operational readiness float and direct exchange criteria	7–3	7–8
Repair parts	5–39	5–143
Theater	7–1	7–1
Mapping and airphotography	2–16	2–35
Distribution	2–20	2–39
Gazetteers	2–22	2–41
Plastic relief maps	2–21	2–39
Production	2–19	2–38
Requirements	2–18	2–36
Responsibility	2–20*b*	2–39
Storage	5–29	5–137
Strip map	2–11*k*	2–21
Terrain models	2–21	2–39
Trig lists	2–23	2–41
Types and scales	2–17	2–35
Materials-handling equipment requirements	5–35, 5–36	5–139

	Paragraph	Page
Mechanized division (*Also* includes separate infantry brigade (mechanized).):		
Equipment summary	1-9	1-14
Fuel data	5-7*c*	5-17
Map requirements	2-18*b*	2-37
Movement:		
Air	2-13, 6-41*b*	2-29, 6-47
Motor	2-9—2-12	2-8—2-23
Rail	6-32	6-35
Water	2-14	2-29
Organization	1-9	1-14
Separate infantry brigade (mechanized)	1-15	1-305
Equipment summary	1-15	1-305
Organization	1-15	1-305
Training areas	7-20*b*	7-41
Troop requirements	2-2	2-3
Medical:		
Evacuation	4-18, 4-24, 4-26	4-13, 4-18, 4-19
Hospitalization	4-21—4-23	4-15—4-17
Military police:		
Crime rates	4-33	4-21
Displaced persons, evacuees, and refugees	2-37	2-68
Enemy civilian internees	4-32	4-21
Evacuation of prisoners of war	4-31	4-21
Military prisoners	4-34	4-22
Prisoner of war capture rates:		
Nonnuclear	4-29	4-20
Nuclear	4-30	4-21
Minefields	3-13	3-23
Motor movement(s)	2-9—2-12	2-8—2-23
Echelon	2-12	2-23
Element (at halt)	2-9*d*	2-9
Planning	2-11	2-14
Movement:		
Air	2-13, 6-41—6-45	2-29, 6-47—6-71
Foot	2-9, 6-49	2-8, 6-73
Motor	2-9—2-12, 6-37—6-40	2-8—2-23, 6-42—6-44
Pack animals	6-47	6-73
Rail (*See also* Rail.)	6-17—6-36	6-28—6-41
Road	2-9	2-8
Sled	6-48	6-73
Water	2-14, 6-17—6-36	2-29, 6-28—6-41
Nomenclature and characteristics of oceangoing vessels	6-14	6-17
Organization:		
Airborne division	1-10	1-145
Airborne special forces group	1-21*b*	1-329
Airmobile division	1-11	1-220
Armored division	1-9	1-14
Army group	1-5	1-4
Corps	1-7	1-5
Department of the Army	1-3	1-1
Engineer amphibious units	1-18, 1-19	1-318
Field army	1-6	1-4
Support command	1-6*b*	1-4
Infantry division	1-9	1-14
Mechanized	1-9	1-14
Separate airborne brigade	1-16	1-305
Separate armored brigade	1-13	1-297
Separate infantry brigade	1-14	1-299
Light	1-17	1-316
Mechanized	1-15	1-305
Special forces group, airborne	1-21*b*	1-329
Theater army	1-4	1-3
Personnel support	4-3, 4-4, 4-35—4-38	4-2, 4-23
Pictorial services	3-7	3-8
Prisoners of war	4-28—4-34	4-19—4-22
Camps, construction	7-12*f*	7-30
Capture rate estimates	4-29, 4-30	4-20, 4-21
Evacuation	4-31	4-21
Psychological operations	2-33	2-66
Rail:		
Characteristics of U.S. rolling stock	6-23	6-32
Density	6-19	6-30
Division moves	6-32	6-35
Equipment estimates	6-22	6-31
Evaluation	6-18	6-30
Flatcar requirements	6-31	6-34
Foreign railways	6-33	6-38
Kitchen, diner, and baggage cars	6-29	6-34
Loading	6-30, 6-34—6-36	6-34, 6-39—6-41
Outside equipment	6-24	6-32
Payload	6-20	6-31
Personnel requirements	6-25, 6-26	6-32
Planning	6-18, 6-34—6-36	6-30, 6-39—6-41
Railway capacity estimates	6-17	6-28
Supply	6-27	6-34
Tonnage	6-21	6-31
Troop loading (continental United States)	6-28	6-34
Rations	5-3	5-2
Refugees	2-37	2-68
Replacements (*See* Losses and replacements.)		
River crossing:		
Bridges	2-14*c*	2-35
Equipment	3-11	3-9
Road(s):		
Capacity	3-10	3-8
Construction	3-10*d*, 7-8	3-9, 7-19

	Paragraph	Page
Road(s)—Continued		
Movement	2-9—2-12	2-8—2-23
Nets, maintenance	7-8	7-19
Rehabilitation	7-8*c*	7-20
Rotary-wing aircraft:		
Characteristics	6-44*b*	6-67
Planning factors	6-44*b*	6-67
Sailing distances	6-15	6-23
Selective loading	6-13*d*	6-17
Separate brigades	1-12—1-17	1-297—1-316
Shipping:		
Discharge rates	6-5*d*	6-6
Floating equipment requirements	6-10	6-15
Loading	6-11—6-13	6-16—6-17
Sailing distances	6-15	6-23
Turnaround times	6-16	6-23
Vessel cargo characteristics	6-6*a*, 6-14	6-8, 6-17
Signal communications (*See also* Communications.):		
Air defense	3-6*e*	3-7
Center	3-4	3-2
Characteristics	3-8	3-8
Construction factors	7-16	7-39
Field army system	3-3	3-2
Highway	3-6*d*	3-6
Means	3-5	3-3
Pictorial services	3-7	3-8
Pipeline	3-6*c*	3-6
Special requirements	3-6	3-6
Users served	3-2	3-1
Storage:		
Area requirements	5-29, 5-31, 5-33	5-137, 5-137, 5-138
Definitions	5-28	5-135
Factors	5-29, 5-31	5-137
Personnel requirements	5-32	5-137
Supply:		
Air movement	6-43	6-66
Buildup	5-41	5-137
Chaplain	4-37	4-23
Consumption rates for 10 classes	5-27	5-122
Division and air wing slices	2-8	2-6
Handling	5-34	5-138
Repair parts system	5-39	5-143
Ten classes	5-2	5-1
Class I:		
Characteristics	5-3	5-2
Consumption factors	5-26*g*, 5-27	5-122
Class II:		
Consumption factors	5-26*g*, 5-27	5-122
Weights and cubes	5-21	5-110
Class III	5-4—5-7	5-2—5-17
Consumption factors	5-4, 5-26*g*, 5-27	5-2, 5-122
Supply—Continued		
Ten classes—Continued		
Class III—Continued		
Estimating requirements	5-6	5-11
Field army requirements	5-7	5-17
Storage and distribution	7-13	7-32
Weights, volume, and conversion factors	5-5	5-11
Class IV:		
Consumption factors	5-26*g*, 5-27	5-122
Weights and cubes	5-22	5-118
Class V	5-8—5-18	5-24—5-76
Basic load	5-18	5-76
Combat vehicle data	5-14	5-33
Consumption factors	5-26*g*, 5-27	5-122
Conventional system	5-12	5-33
Direct support	5-10	5-32
Expenditures	5-15—5-17	5-38
General support	5-11	5-32
Levels	5-9	5-32
Service	5-8	5-24
Special system	5-13	5-33
Class VI	5-26*g*, 5-27	5-122
Class VII:		
Consumption factors	5-26*g*, 5-27	5-122
Dimensions and weights	5-19, 5-20	5-88
Class VIII:		
Consumption factors	5-26*g*, 5-27	5-122
Weights and cubes	5-23	5-118
Class IX	5-26*g*, 5-27	5-122
Class X	5-27	5-122
Support brigades	1-6*b*	1-4
Terminals:		
Air	6-42	6-65
Inland	6-7, 6-8	6-9, 6-14
Water:		
Anchorage areas	6-5*e*	6-6
Beaches	6-6	6-8
Capacity estimation	6-5*b*, 6-9	6-4, 6-15
Construction	7-10	7-23
Discharge rates	6-5*d*	6-6
Personnel and equipment	6-5*f*	6-6
Ports	6-5	6-4
Theater:		
Army:		
Organization	1-4	1-3
Support command troop requirements	2-3	2-3
Estimates:		
Personnel losses, nonnuclear	4-11	4-11
Prisoner of war evacuation	4-31	4-21
Troop requirements	2-2—2-6	2-3—2-5

	Paragraph	Page
Transportation:		
Air	6-41—6-45	6-47—6-71
Animals, pack	6-47	6-73
Capabilities	6-2	6-1
Computing requirements	6-39	6-44
Human bearers	6-49	6-73
Motor	6-37—6-40	6-42—6-44
Planning factors	6-1, 6-3, 6-38	6-1, 6-43
Rail	6-17—6-36	6-28—6-41
Sleds	6-48	6-73
Water	6-4—6-16	6-3—6-23
Trig lists	2-23	2-41
Troop requirements	2-1—2-6	2-1—2-5
Utilities requirements	7-4	7-11
Vehicle:		
Fuel data	5-4	5-2
Losses in combat	7-5	7-14
Vessels, cargo:		
Characteristics	6-6*a*, 6-14*c*	6-8, 6-17
Nomenclature	6-14*b*	6-17
Sailing distances	6-15	6-23
Turnaround times	6-16	6-23
Water:		
Supply requirements	7-18	7-41
Terminals	6-4—6-6, 7-10	6-3—6-8, 7-23
Weapon characteristics	2-30, 2-31	2-53
World Geographic Reference System	2-29	2-52

By Order of the Secretary of the Army:

W. C. WESTMORELAND,
General, United States Army,
Chief of Staff.

Official:
VERNE L. BOWERS,
Major General, United States Army,
The Adjutant General.

Distribution:

To be distributed in accordance with DA Form 12–11 requirements for Staff Officers' Field Manual, Organization, Technical and Logistical Data.

☆ U. S. GOVERNMENT PRINTING OFFICE : 1971 714-205/5013

3000031629